Fuji Electric

Innovating Energy Technology

High Performance Multifunctional Inverters

FRENIC-MEGA Series

FUJI INVERTERS

With the flexibility and functionality to support a wide range of applications on all types of mechanical equipment, the FRENIC-MEGA takes core capability, responsiveness, environmental awareness, and easy maintenance to the next level.

24A1-E-0084c

The performance, reaching the peak in the industry

FRENIC-MEGA is a high performance, multifunctional inverter Fuji Electric has developed by gathering the best of its technologies. With our own state-of-the-art technology, the control performance has evolved to a new dimension.

FRENIC-MEGA has been developed to use with a variety of equipment by improving the basic performance, satisfying the requirements for various applications, achieving easy maintenance, and enhancing the resistance to the environmental impacts.

FRENIC-MEGA, the inverter with the highest performance in the industry, is about to redefine the common sense of general-purpose inverters. Now, it is ready to answer your needs.

FRENIC MEGA

Maximum Engineering for Global Advantage

FUJI INVERTERS

With the flexibility and functionality to support a wide range of applications on all types of mechanical equipment, the FRENIC-MEGA takes core capability, responsiveness, environmental awareness, and easy maintenance to the next level.

Two types of keypads are available for FRENIC-MEGA: the multi-function keypad and the keypad with USB port. You can select and use the keypad that meets your application needs.

FRENIC-MEGA
+
Multi-function keypad

FRENIC-MEGA
+
Keypad with USB port

High Performance Multifunctional Inverters

FRENIC-MEGA Series

Maximum Engineering for Global Advantage

Improved control performance

Ⅰ Applicable control methods: PG vector control, sensorless vector control, dynamic torque vector control, and V/f control

Ⅱ Improved performance of current response and speed response (vector control)

Ⅲ Improved durability in overload operation

HD (High duty) spec: 200% for 3 sec / 150% for 1 min
: For general industry applications

MD (Middle duty) spec: 150% for 1 min
: For constant torque applications

LD (Low duty) spec: 120% for 1 min
: For fans and pumps applications

Easy maintainance

Ⅰ Keypad with a USB connector (option)

Ⅱ A multi-function keypad (option)

Ⅲ Maintenance warning signal output

Ⅳ Use of parts of a longer life cycle (Designed life: 10 years)
(Main circuit capacitor, electrolytic capacitor, cooling fan)

FRENIC MEGA
Maximum Engineering for Global Advantage

Various applications

Ⅰ Various functions that accommodate a wide range of applications
Example: Detection of braking transistor breakage, improved reliability of brake signals, and operation at a specified ratio

Ⅱ Expanded capacity of the brake circuit built-in model
(Standard-equipped for 22kW or smaller models)

Ⅲ Various network support
(PROFIBUS DP, DeviceNet, CC-Link, etc.)

Environmental adaptation

Ⅰ Great model variation meeting customers' needs
-Basic type
-EMC filter built-in type

Ⅱ Compliance with RoHS Directives

Ⅲ Improved resistance to the environmental impact

Safety Precautions

1. Use the contents of this catalog only for selecting product types and models. When using a product, read the Instruction Manual beforehand to use the product correctly.
2. Products introduced in this catalog have not been designed or manufactured for such applications in a system or equipment that will affect human bodies or lives. Customers, who want to use the products introduced in this catalog for special systems or devices such as for atomic-energy control, aerospace use, medical use, and traffic control, are requested to consult the Fuji's Sales Division. Customers are requested to prepare safety measures when they apply the products introduced in this catalog to such systems or facilities that will affect human lives or cause severe damage to property if the products become faulty.

Best vector control for the general-purpose inverter in the class

Ideal for highly accurate control such as positioning

PG vector control

Effective in providing highly accurate control for applications such as printing press

Speed control range: 1:1500
Speed response: 100Hz
Speed control accuracy: ±0.01%
Current response: 500Hz
Torque accuracy: ±10%
* The option card is required separately.
* The above specifications may vary depending on the environment or conditions for use.

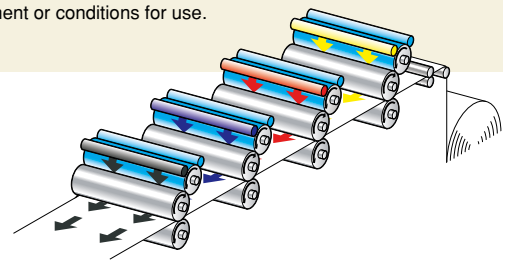

Fuji's original dynamic torque vector control has further evolved.

Besides the dynamic torque vector control, the inverter is equipped with the motor constant tuning for compensating even a voltage error of the main circuit devices and the magnetic flux observer of a new system. This realizes a high starting torque of 200% even at a low-speed rotation of 0.3Hz.

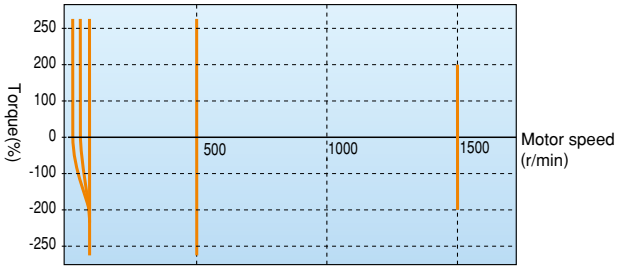

Example torque characteristics [5.5kW]

Improved durability in overload operation

The inverter performs short-time acceleration and deceleration with the maximum capacity by extending the time specification of overload current ratings compared with our previous models. This improves the operation efficiency of the equipment such as cutting machine or conveyance machine.
Overload durability: 200% for 3 sec and 150% for 1 min.

The standard model is available in two specifications concerning the operation load.

Classification	Overload current rating	Major use
HD (High duty) spec	200% for 3 sec, 150% for 1 min	Operation under heavy load
MD (Middle duty) spec	150% for 1 min	Operation under constant torque load
LD (Low duty) spec	120% for 1 min	Operation under light load

Expanded capacity for the braking circuit built-in type

A braking circuit is built in the 22kW or smaller models as standard. These inverters are applicable to the machine that uses regenerative load such as a vertical conveyance machine.
(The 7.5kW or smaller models also incorporate a braking resistor.)
* The inverters with built-in braking circuit are available on request for 30kW to 160kW models in 400V series.

Maximizing the performance of a general-purpose motor

Speed sensor-less vector control

Useful for the application that requires a high starting torque, such as the gondola type multi-level car parking tower

Speed control range: 1:200
Speed response: 20Hz
Speed control accuracy: ±0.5%
Current response: 500Hz
Torque accuracy: ±10%

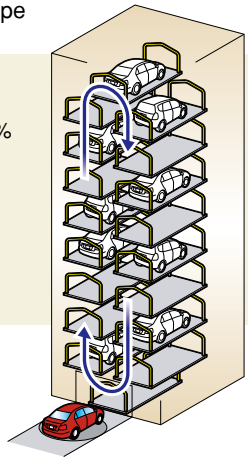

Improved reaction to the fluctuation of impact load

When a remarkable load fluctuation occurs, the inverter provides the torque response in the class-top level. It controls the flux to minimize the fluctuation in the motor speed while suppressing the vibration. This function is best suited for the equipment that requires stable speed such as a cutting machine.

Example:

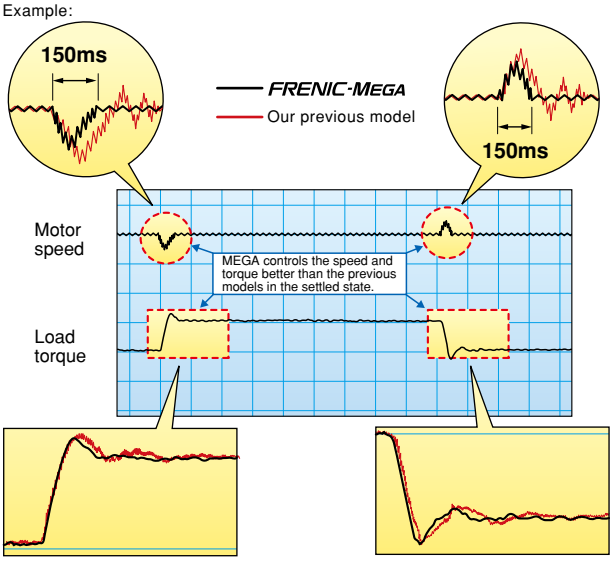

Quicker response to the operation commands

The terminal response to the operation commands has had an established reputation. FRENIC-MEGA has further shortened this response time, achieving the industry-top response time.
This function is effective in shortening the tact time per cycle and effective for use in the process including frequent repetitions.

Example:

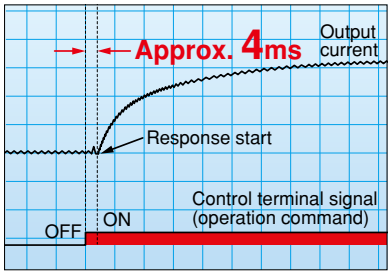

Terminal response time example per command

FRENIC-MEGA :Approx. 4ms

Previous model :Approx. 6ms

Response time shortened by approx. 2 ms

Accommodating various applications

Convenient function for operations at the specified speed

The pulse train input function is equipped as standard.

It is possible to issue the speed command with the pulse train input (single-phase pulse and a sign of command value) from the pulse generator, etc.
(Maximum pulse input frequency: 100kHz)

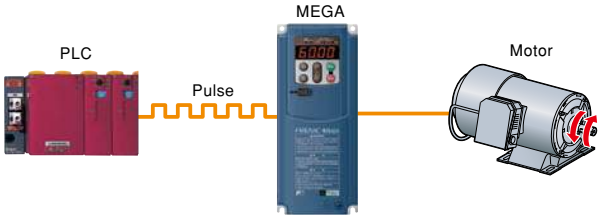

Ratio operation

The ratio operation is the function particularly convenient for adjusting two or more conveyance systems. The ratio of the main axis speed to the two or more trailing axes can be set as a frequency command. On the machine that handles load variation such as a conveyance machine, the conveyance speed can be adjusted easily.

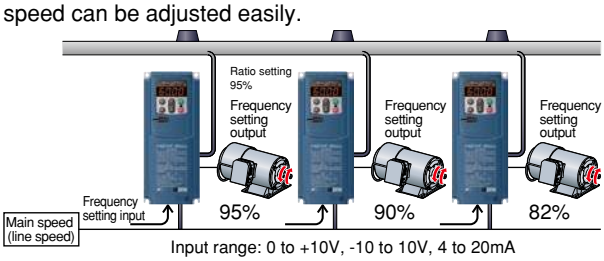

$$\text{Frequency setting output} = \text{Frequency setting input} \times \frac{\text{Analog input (Ratio setting)}}{100\%}$$

Thorough protection of the braking circuit

The inverter protects the braking resistor by monitoring the braking transistor operation. **The inverter outputs a dedicated signal for the detection of the braking transistor failure.** A circuit for shutting off the input power supply must be provided outside of the inverter. When this signal is output, the power is shut off; thus protecting the braking circuit.

Optimum function for preventing an object from slipping down

The reliability of the brake signal was increased for uses such as vertical conveyance. Conventionally, the current value and the frequency have been monitored when the brake signal is output. By adding a torque value to these two values, the brake timing can be adjusted more easily.

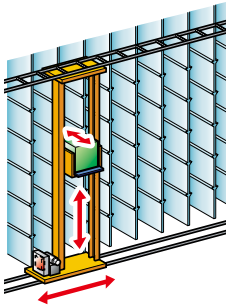

Dancer control function optimum for winding control

The PID value, calculated by comparing the target value and the feedback value, is added to or subtracted from the reference speed. Since the PID calculator gain (in proportional range) can be set to a low value, the inverter can be applied to the automatic control system that requires quick response such as a speed controller.

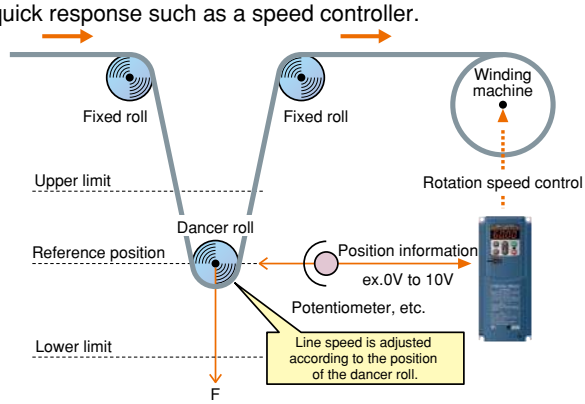

More functions are available to meet various requirements

(1) Analog inputs: voltage input through 2 terminals with polarity, current input through 1 terminal (2) Slow flowrate level stop function (Pressurized operation is possible before slow flowrate operation stop.) (3) Non-linear V/f pattern at 3 points (4) Dummy failure output function (5) Selection of 4 motors (6) S-shape accel./decel. range setting (7) Detecting disconnection of the PID feedback

MEGA World Keeps Expanding

PG option card for positioning control

This control function is best suited for the application that requires highly accurate positioning such as that of the conveyance machine. By combined use of the position control loop (APR) and PG vector control, the position control accuracy has been remarkably improved. Shortened positioning time by this function will be helpful to reduce the tact time of a cycle.

Example: Fixed length marking system

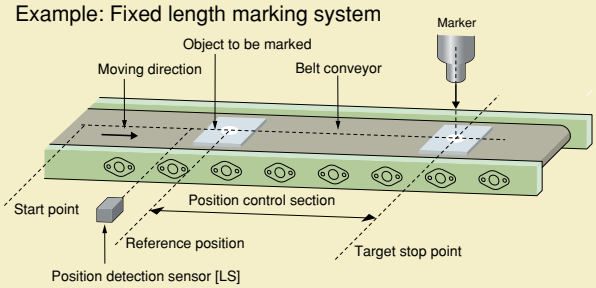

The customizable logic function is adopted in the inverter body.

Logic input/output can be easily created by parameter setting. This makes it possible to simplify the peripheral circuits.

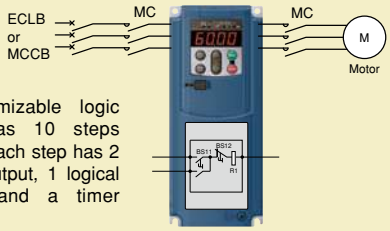

The customizable logic function has 10 steps available. Each step has 2 inputs, 1 output, 1 logical operation and a timer function.

Introducing servo lock function (PG option card).

This function holds the current position of the motor shaft when motor is stopped under vector control with speed sensor. This function is useful when torque is applied externally or holding torque is required during the stop time.

Wide model variation meeting the customer needs

Wide model variation

1. Basic type

Suitable for the equipment that uses a peripheral device to suppress noise or harmonics.

2. EMC filter built-in type

By adopting built-in filter, this type is compliant with European EMC standard EN 61800-3:2004/A1:2012 category C3 (second environment).

* Use of EMC filter will increase the leakage current.

Supports for simple maintenance

You can select the keypad suitable for your application, which improves usability.

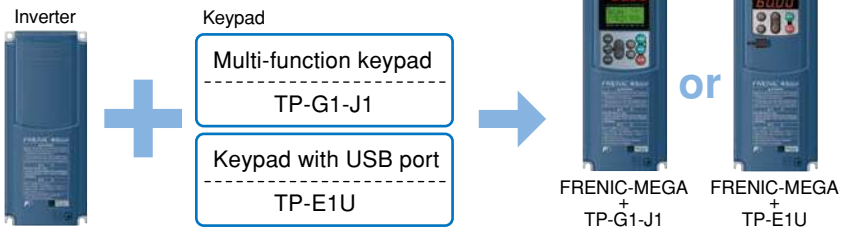

Multi-function keypad Type: OPC-G1-J1 (Option)

Features

- Back-lighted LCD with higher view-ability
- A large 7-segment LED with 5-digit display
- Quick setup data item can be added/deleted.
- Remote/local switch key has been newly added.
- Max. 3 sets of data can be copied.
- Display languages:
  - ・TP-G1-J1: English,German,French,Spanish,Italian and Japanese

Keypad with USB port Type: TP-E1U (Option)

●The built-in USB port allows use of a personal computer loader for easy information control!

Improved working efficiency in the manufacturing site

●A variety of data about the inverter body can be saved in the keypad memory, allowing you to check the information in any place.

Example of use in the office

●Data can be transferred from the USB port of the keypad directly to the computer (personal computer loader) in the manufacturing site.

●Periodical collection of life information can be carried out efficiently.

●The real-time tracing function permits the operator to check the equipment for abnormality.

Example of use in the manufacturing site

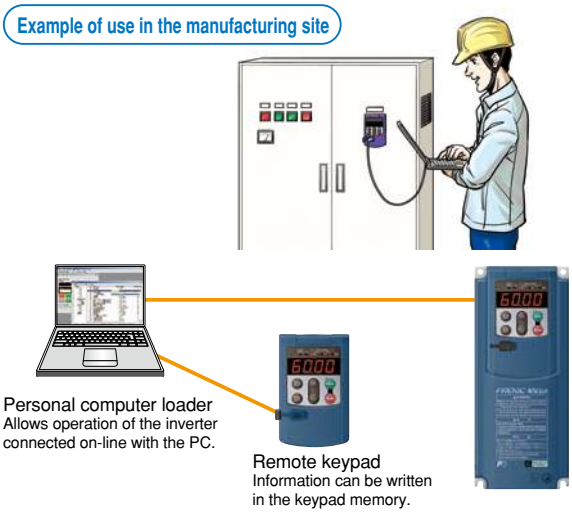

Features

1. The keypad can be directly connected to the computer through a commercial USB cable (Mini B) without using a converter. The computer can be connected on-line with the inverter.
2. With the personal computer loader, the inverter can support the following functions (1) to (5).
   (1) Editing, comparing, and copying the function code data
   (2) Operation monitor, and real-time trace
   (3) Trouble history (indicating the latest four troubles)
   (4) Maintenance information
   (5) Historical trace

Network building

Connection with the network with the option card

Parts name	Type	Remarks
Extension cable	CB-5S	5m
	CB-3S	3m
	CB-1S	1m
DeviceNet communications card	OPC-G1-DEV	This card allows to connect the inverter with the host controller by using DeviceNet communication protocole.
CC-Link communications card	OPC-G1-CCL	This card allows to connect the inverter with the host controller by using CC-Link communication protocole.
PROFIBUS-DP communications card	OPC-G1-PDP2	This card allows to connect the inverter with the host controller by using PROFIBUS-DP communication protocole.
CANopen communications	OPC-G1-COP	This card allows to connect the inverter with the host controller by using CANopen communication protocole.
T-Link communications card	OPC-G1-TL	Up to 12 inverters can be connected by connecting the Fuji's PLC and the inverter via T-Link (I/O transmission). - Operation frequency setting - Operation command setting (FWD, REV, RET, etc.)
PG interface card (supporting 12V)	OPC-G1-PG	This card is used to connect the PG, enabling speed control and position control.
PG interface card (supporting 5V)	OPC-G1-PG2	This card is used to connect the PG, enabling speed control and position control.
Digital input interface card	OPC-G1-DI	Using this card allows frequency setting by 8, 12, 15, and 16 bits, and by BCD code.
Digital output interface card	OPC-G1-DO	The output interface card to be equipped with FRENIC-MEGA, which allows monitoring frequency, output voltage, and output current with binary code.
Analog interface card	OPC-G1-AIO	Using this card allows the torque limit value input, frequency and frequency ratio setting with analog input.
Relay output interface card	OPC-G1-RY	Using this card, the transistor outputs are converted to relay outputs.
IP40 supporting attachment	P40G1-□□	Note: These options have restrictions on use as follows. - Ambient temperature: -10 to +40°C - The number of the optional printed circuit boards to be mounted is one. - These options cannot apply to the EMC filter built-in type.

□:0.75, 3.7, 11, 22.
0.75····0.4, 0.75kW　　11 ····5.5, 7.5, 11kW
3.7 ····1.5, 2.2, 3.7kW　　22····15, 18.5, 22kW

Restrictions on mounting an optional card　　○: Mounting possible　None: Mounting impossible

Mounting port	OPC-G1S-□□						
	PG	PG2	SY	DI	DO	AIO	RY
C PORT	○	○	○	○	○	○	None
B PORT	None	None	None	○	○	○	○
A PORT	None	None	None	○	○	○	○
Remarks	*1			*2	*2	*2	*3

*1 Any one of the above can be mounted on only C port.
*2 Only one card can be mounted on any of A, B, or C ports.
Cards can be mounted on DI, DO, and AIO ports at the same time, however, two identical cards cannot be allowed.
*3 The cards can be mounted on both A and B ports.
Two RY cards can be mounted at the same time.
The number of RY contact points of a card is two. If three or four points are necessary, prepare two cards.
Note: There are also restrictions on mounting when using the optional communications card. Contact us for details.
Note: When mounting the IP40 option, only one optional card can be mounted (two RY cards can be mounted).

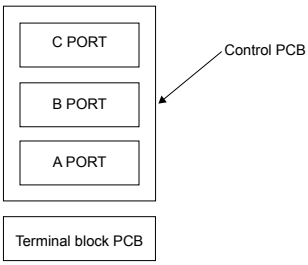

Advanced network function

■RS-485 communications is possible as a standard function (terminal base).

Besides the port (RJ-45 connector) shared with the keypad, additional RS-485 port is provided as a standard function. Since the interface is connected through terminals, multi-drop connection can be made easily.

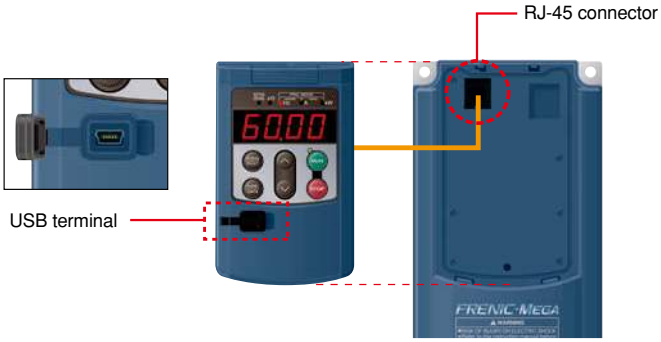

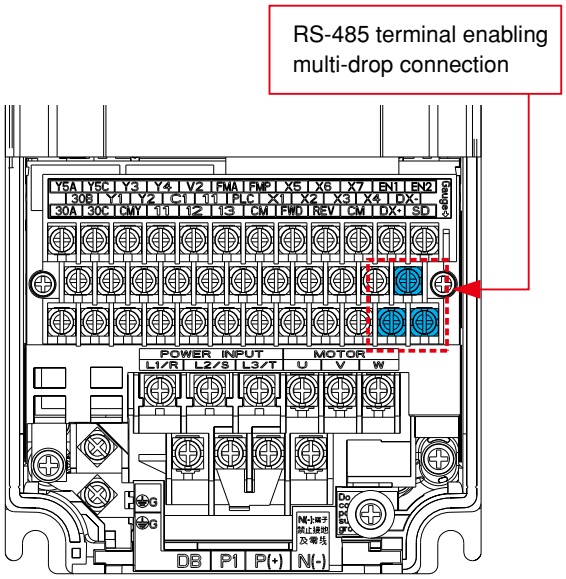

Prolonged service life and improved life judgment function

Designed life 10 years

For the various consumable parts inside the inverter, their designed lives have been extended to 10 years, which also extended the equipment maintenance cycles.

Consumable part	Designed life
Main circuit capacitor	10 years
Electrolytic capacitor on PCB	10 years
Cooling fan	10 years

The conditions used for the calculation of the parts lives are:
an ambient air temperature of 40˚C and under the load rate of 100% (HD spec) or 80% (LD spec)

* The design lives are the calculated values and not the guaranteed ones.

Full support of life warnings

The inverter is equipped with the functions for facilitating the maintenance of the equipment

Item	Purpose
Cumulative inverter run time (h)	Displays the total run time of the inverter.
Number of inverter startups	Displays the number of times the inverter has started the equipment. **Example of use:** This data indicates the time to replace the equipment parts (such as a timing belt) operating under the normal load.
Equipment maintenance warning Cumulative run time (h) Number of startups	By inputting the signal for operation with the commercial power supply, the time without the inverter operation time can also be measured. This makes it possible to manage the total run time of the equipment and the number of startups. Such data is usable for preparing the maintenance schedule.
Display of inverter life warning	The displayed contents include: main circuit capacitor capacity, total run time of the cooling fan (with ON/OFF compensation), total run time of the electrolytic capacitor on the printed circuit board, and total run time of the inverter.

Consideration for environment

Enhanced resistance to the environmental impacts

Resistance to the environmental impact has been enhanced compared with the conventional inverter.

(1) Enhanced durability of the cooling fan operated under the environmental impact
(2) Adoption of copper bars plated with nickel or tin

In MEGA, resistance to the environmental impact has been increased compared with the conventional model (FRENIC5000 G11S/P11S). However, examine the use of the inverter carefully according to the environment in the following cases:

a. Environment is subject to sulfide gas (at tire manufacturer, paper manufacturer, sewage disposer, or part of the process in textile industry).
b. Environment is subject to conductive dust or foreign materials (in metalworking, operation using extruding machine or printing machine, waste disposal).
c. Others: The inverter is used in the environment of which specification exceeds the specified range.

If you are examining use of the inverter under the above conditions, consult the Fuji's Sales Division regarding the models with enhanced durability.

Compliance with RoHS Directives

MEGA complies with European regulations that limit the use of specific hazardous substances (RoHS) as a standard. This inverter is environment-friendly as the use of the following six hazardous substances is restricted.

<Six hazardous substances>
Lead, mercury, cadmium, hexavalent chromium, polybrominated biphenyl (PBB), and polybrominated biphenyl ether (PBDE)
* Except the parts of some inverter models

<About RoHS>
The Directive 2011/65/EU, promulgated by the European Parliament and European Council, limits the use of specific hazardous substances included in electrical and electronic devices.

Protection against micro surge

Surge suppression unit (optional)

If the motor drive cable between the inverter and the motor is long, a very short surge voltage (micro surge) is generated at the motor connection ends. This surge voltage causes deterioration of the motor, dielectric breakdown, or increase in noise. The surge suppression unit suppresses this surge voltage.

(1)The surge voltage can be significantly suppressed simply by connecting the surge suppression unit to the motor.
(2)Since no additional work is required, it can be easily mounted on the existing equipment.
(3)The unit is applicable to the motors regardless of their capacity.
(4)The unit requires no power source and no maintenance.
(5)There are two models available depending on the cable length between the inverter and the motor: 50m and 100m.
(6)Compliant with environmental standard and safety standard (Compliant with RoHS Directives, and application to UL standard pending).

●**Surge suppression unit structure**

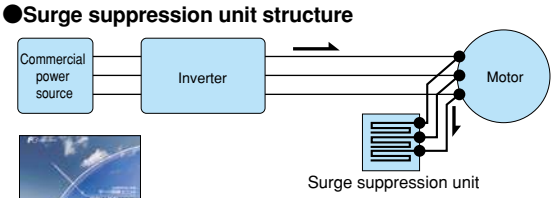

MEH654

See the surge suppression unit catalog(MEH654) for details.

Global compatibility

●**Application to the world standards**

Europe	North America/Canada
EC Directive (CE marking)	UL standard (cUL certified)
CE	c UL us LISTED

●**Wide voltage range**

Applicable to 480V and 240V power supplies as standard

Function Safety

●**STO safety function**

FRENIC-MEGA is equipped with STO functional safety function as a standard. Therefore output circuit magnetic contactors are not required for safe stop implementation (EN1/EN2 inputs).

Compliant with the following standards :

EN61800-5-1:2007, EN61800-5-2:2007 SIL2,
EN ISO 13849-1:2008 PL=d Cat.3, EN954-1:1996 Cat.3

Model Variations

Model list

HD : High Duty spec 200% for 3 sec, 150% for 1min
LD : Low Duty spec 120% for 1 min

Standard applied motor (kW)	Basic type				EMC filter built-in type	
	3-phase 400 V series		3-phase 200 V series		3-phase 400 V series	
	HD spec (150%)	LD spec (120%)	HD spec (150%)	LD spec (120%)	HD spec (150%)	LD spec (120%)
0.4	FRN0.4G1S-4A		FRN0.4G1S-2A		FRN0.4G1E-4A	
0.75	FRN0.75G1S-4A		FRN0.75G1S-2A		FRN0.75G1E-4A	
1.5	FRN1.5G1S-4A		FRN1.5G1S-2A		FRN1.5G1E-4A	
2.2	FRN2.2G1S-4A		FRN2.2G1S-2A		FRN2.2G1E-4A	
3.7	FRN3.7G1S-4A		FRN3.7G1S-2A		FRN3.7G1E-4A	
5.5	FRN5.5G1S-4A		FRN5.5G1S-2A		FRN5.5G1E-4A	
7.5	FRN7.5G1S-4A	FRN5.5G1S-4A	FRN7.5G1S-2A	FRN5.5G1S-2A	FRN7.5G1E-4A	FRN5.5G1E-4A
11	FRN11G1S-4A	FRN7.5G1S-4A	FRN11G1S-2A	FRN7.5G1S-2A	FRN11G1E-4A	FRN7.5G1E-4A
15	FRN15G1S-4A	FRN11G1S-4A	FRN15G1S-2A	FRN11G1S-2A	FRN15G1E-4A	FRN11G1E-4A
18.5	FRN18.5G1S-4A	FRN15G1S-4A	FRN18.5G1S-2A	FRN15G1S-2A	FRN18.5G1E-4A	FRN15G1E-4A
22	FRN22G1S-4A	FRN18.5G1S-4A	FRN22G1S-2A	FRN18.5G1S-2A	FRN22G1E-4A	FRN18.5G1E-4A
30	FRN30G1S-4A	FRN22G1S-4A	FRN30G1S-2A	FRN22G1S-2A	FRN30G1E-4A	FRN22G1E-4A
37	FRN37G1S-4A	FRN30G1S-4A	FRN37G1S-2A	FRN30G1S-2A	FRN37G1E-4A	FRN30G1E-4A
45	FRN45G1S-4A	FRN37G1S-4A	FRN45G1S-2A	FRN37G1S-2A	FRN45G1E-4A	FRN37G1E-4A
55	FRN55G1S-4A	FRN45G1S-4A	FRN55G1S-2A	FRN45G1S-2A	FRN55G1E-4A	FRN45G1E-4A
75	FRN75G1S-4A	FRN55G1S-4A	FRN75G1S-2A	FRN55G1S-2A	FRN75G1E-4A	FRN55G1E-4A
90	FRN90G1S-4A	FRN75G1S-4A	FRN90G1S-2A	FRN75G1S-2A	FRN90G1E-4A	FRN75G1E-4A
110	FRN110G1S-4A	FRN90G1S-4A		FRN90G1S-2A	FRN110G1E-4A	FRN90G1E-4A
132	FRN132G1S-4A	FRN110G1S-4A			FRN132G1E-4A	FRN110G1E-4A
160	FRN160G1S-4A	FRN132G1S-4A			FRN160G1E-4A	FRN132G1E-4A
200	FRN200G1S-4A	FRN160G1S-4A			FRN200G1E-4A	FRN160G1E-4A
220	FRN220G1S-4A	FRN200G1S-4A			FRN220G1E-4A	FRN200G1E-4A
280	FRN280G1S-4A	FRN220G1S-4A			FRN280G1E-4A	FRN220G1E-4A
315	FRN315G1S-4A				FRN315G1E-4A	
355	FRN355G1S-4A	FRN280G1S-4A			FRN355G1E-4A	FRN280G1E-4A
400	FRN400G1S-4A	FRN315G1S-4A			FRN400G1E-4A	FRN315G1E-4A
450		FRN355G1S-4A				FRN355G1E-4A
500	FRN500G1S-4A	FRN400G1S-4A			FRN500G1E-4A	FRN400G1E-4A
630	FRN630G1S-4A	FRN500G1S-4A			FRN630G1E-4A	FRN500G1E-4A
710		FRN630G1S-4A				FRN630G1E-4A

How to read the inverter model

FRN 0.75 G 1 S - 4 A

Code	Series name
FRN	FRENIC series

Code	Applicable motor rating (HD)
0.4	0.4kW
0.75	0.75kW
ˢ	ˢ
500	500kW
560	560kW
630	630kW

Code	Applicable range
G	High performance, multifunctional type

Code	Destination / Instruction manual
A	Asia / English

Code	Input power source
4	3-phase 400V
2	3-phase 200V

Code	Enclosure
S	Standard (basic type)
E	EMC filter built-in type

Code	Order of development
1	Series

*The keypad is not included as standard equipment for inverters. Please select and use either (1) multi-function keypad (TP-G1-J1) or (2) remote control keypad (TP-E1U) as option.
*The DC reactor is not included as standard equipment for inverters. Please select and use the optional DC reactor listed on page 46 in this catalog.

Caution The contents of this catalog are provided to help you select the product model that is best for you. Before the actual use, be sure to read the User's Manual thoroughly for proper operations.

Keypad Operations

Keypad switches and functions

LED monitor

4-digit, 7-segment LED monitor
The following data is displayed in each operation mode.

■Run mode : Operation information (output frequency, output current, output voltage, etc.) When a minor trouble occurs, the monitor shows a minor trouble warning L-AL

■Program mode : Menu, function code, function code data, etc.

■Alarm mode : Alarm code indicating the cause that triggered the protection function.

Program/Reset key

Used to change the operation mode.

■Run mode : Press the key to switch the program mode.

■Program mode : Press the key to switch the run mode.

■Alarm mode : After solving the problem, press this key to turn off the alarm and switch to the run mode.

Function/Data key

Use this key for the following operations.

■Run mode : Press the key to switch the operation status information to be displayed (output frequency, output current and output voltage). When a minor trouble warning is displayed, holding down this key resets the alarm and switches back to Running mode.

■Program mode : Press the key to display the function code or establish data.

■Alarm mode : Press the key to display the detailed alarm information.

Keypad control LED

This LED is on when the RUN key on the keypad is enabled and can issue an operation command. In the program mode or alarm mode, however, no operation is possible even if this LED is lit.

USB port

Enables connection of the inverter with the PC using USB cable. The inverter side connector is of the mini B-type.

x10 LED

If the data to be displayed exceeds 9999, the x10 LED lights, indicating that the actual data is ten times the displayed data.

Example: If the data is "12,345," the LED monitor displays "1234," and the "x10 LED" appears at the same time, indicating that the actual value is 1,234 x 10 = 12,340.

Unit LED (3 places)

r/min m/min
■Hz □A □kW

Combination of the three LEDs shows the unit used when the operating condition is monitored in the run mode.

PRG. MODE
When the programming mode is selected, the right and left LEDs are on.eft LEDs are on.
■Hz □A ■kW

RUN LED

This LED is on during operation with RUN key, FWD/REV signal or with communication operation command.

RUN key

Starts the motor operation.

STOP key

Stops the motor operation.

Up/Down key

Used to select the setting items displayed on the LED monitor or change the function mode data.

Monitor display and key operation

The keypad modes are classified into the following 3 modes.

Monitor, keys \ Operation mode		Programming mode STOP	Programming mode RUN	Running mode STOP	Running mode RUN	Alarm mode
Monitor: 8.8.8.8.	Function	Displays the function code and data.		Displays the output frequency, set frequency, loaded motor speed, power consumption, output current, and output voltage.		Displays the alarm description and alarm history.
	Display	Lighting		Blinking	Lighting	Blinking/Lighting
Monitor: PRG. MODE r/min m/min □Hz □A □kW	Function	Indicates that the program mode is selected.		Displays the units of frequency, output current, power consumption, and rotation speed.		None
	Display	PRG. MODE r/min m/min ■Hz □A ■kW ON		Frequency display: PRG. MODE r/min m/min ■Hz □A □kW ON Speed display: PRG. MODE r/min m/min ■Hz ■A □kW ON Current display: PRG. MODE r/min m/min □Hz ■A □kW ON Capacity or Current indication: PRG. MODE r/min m/min □Hz □A ■kW blinks or lit		OFF
Monitor: □ KEYPAD CONTROL	Function	Operation selection (keypad operation/terminal operation) is displayed.				
	Display	Lit in keypad operation mode				
Monitor: □ RUN	Function	Indicates absence of operation commands.	Indicates presence of operation commands.	Indicates absence of operation commands.	Indicates presence of operation commands.	Indicates that the operation is trip-stopped.
	Display	□ RUN unlit	■ RUN lit	□ RUN unlit	■ RUN lit	If an alarm occurs during operation, the lamp is unlit during keypad operation and lit during terminal block operation.
Keys: PRG. RESET	Function	Switches to running mode Digit shift (cursor movement) in data setting		Switches to programming mode.		Releases the trip and switches to stop mode or running mode.
Keys: FUNC. DATA	Function	Determines the function code, stores and updates data.		Switches the LED monitor display.		Displays the operation information.
Keys: ∧ ∨	Function	Increases/decreases the function code and data.		Increases/decreases the frequency, motor speed and other settings.		Displays the alarm history.
Keys: RUN	Function	Invalid		Starts running (switches to running mode (RUN)).	Invalid	Invalid
Keys: STOP	Function	Invalid	Deceleration stop (switches to programming mode (STOP)).	Invalid	Deceleration stop (switches to running mode (STOP)).	Invalid

Full-fledged maintenance with the FRENIC loader

- ■Editing, comparing and copying the function code data
- ■Operation monitor, real-time historical trace, trouble monitor, and multi-monitor
- ■Test run, motor auto tuning
- ■The real-time trace function monitors the inverter operating conditions with the waveforms in the multi-channel graph format, and the results can be stored in a data file. The stored data can be used for motion analysis etc.

*** The loader software can be downloaded for free from FUJI's website.**
FE URL(http://www.fujielectric.com/)➡Products & Solutions➡Drives & Inverters➡AC Drives(Low voltage)➡Downloads➡FRENIC-MEGA

Function code list editing

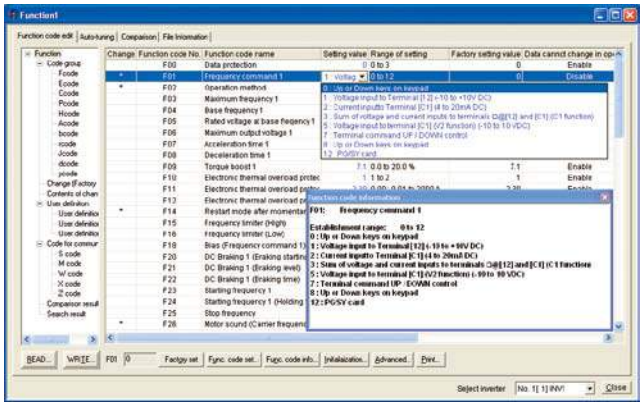

Historical trace

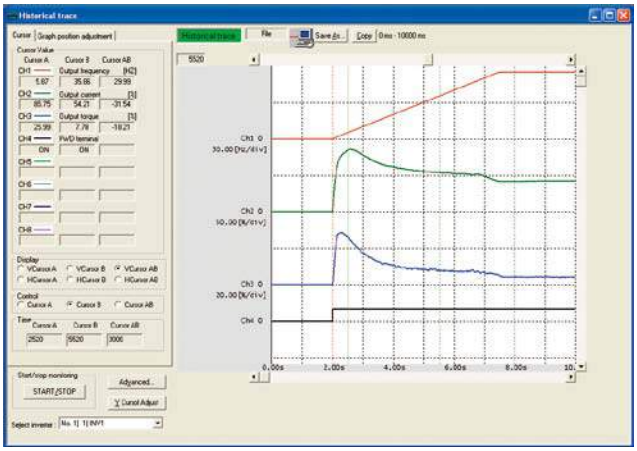

Operation monitor

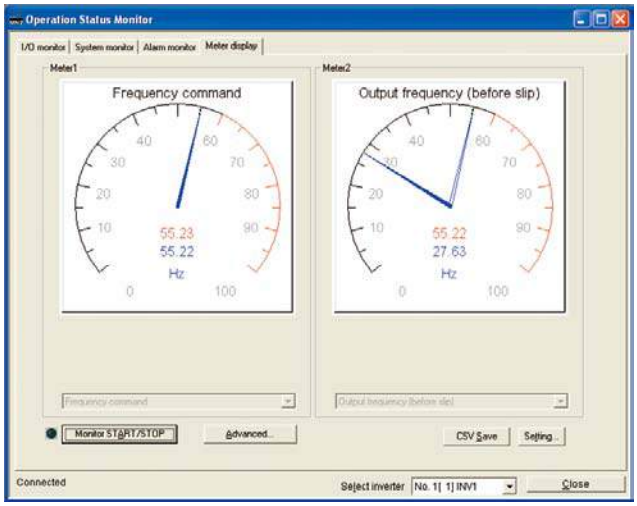

Test run screen

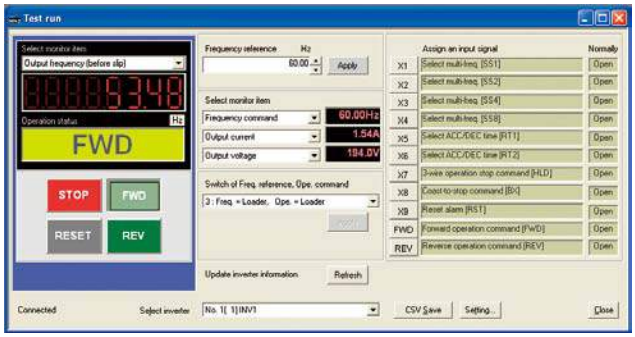

Maintenance information

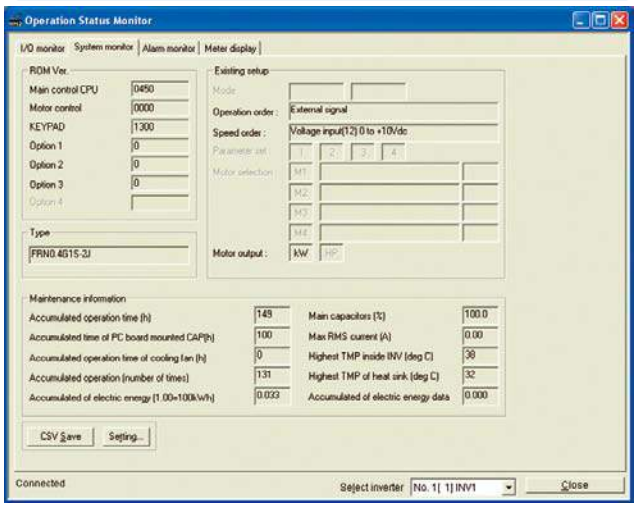

Standard Specifications (Basic type)

Three-phase 400V series

(0.4 to 55kW) HD (High Duty) spec for heavy load

Item			Specifications														
Type (FRN□□□G1S-4A)			0.4	0.75	1.5	2.2	3.7	5.5	7.5	11	15	18.5	22	30	37	45	55
Nominal applied motor [kW] (*1)			0.4	0.75	1.5	2.2	3.7	5.5	7.5	11	15	18.5	22	30	37	45	55
Output ratings	Rated capacity [kVA] (*2)		1.1	1.9	2.8	4.1	6.8	10	14	18	24	29	34	45	57	69	85
	Rated voltage [V] (*3)		Three-phase 380 to 480V (with AVR)														
	Rated Current [A]		1.5	2.5	4	5.5	9	13.5	18.5	24.5	32	39	45	60	75	91	112
	Overload capability		150% for 1min, 200% for 3.0s														
	Rated frequency [Hz]		50, 60Hz														
Input ratings	Main circuit power Phases, voltage, frequency		Three-phase 380 to 480V, 50/60Hz														
	Auxiliary control power input Phases, voltage, frequency		–		Single-phase 380 to 480V, 50/60Hz												
	Auxiliary power input for fan Phases, voltage, frequency (*5)		–														
	Voltage, frequency variations		Voltage:(10 to -15% (Voltage unbalance:2% or less (*6)) Frequency:+5 to -5%														
	Rated current [A] (*7)	with DCR	0.85	1.6	3.0	4.5	7.5	10.6	14.4	21.1	28.8	35.5	42.2	57.0	68.5	83.2	102
		without DCR	1.7	3.1	5.9	8.2	13.0	17.3	23.2	33	43.8	52.3	60.6	77.9	94.3	114	140
	Required power supply capacity [kVA] (*8)	with DCR	0.6	1.2	2.1	3.2	5.2	7.4	10	15	20	25	30	40	48	58	71
Braking	Torque [%] (*9)		150%		100%					20%				10 to 15%			
	Braking transistor		Built-in											–			
	Min. ohmic value [Ω] Torque [%]		200 180%		160 180%		96 180%	64 180%	48 180%	32 180%	24 180%	16 180%		–			
	Built-in braking resistance		720Ω	470Ω	160Ω			80Ω		–							
		Braking time[s]	5s							–							
		%ED	5	3	5	3	2	3	2	–							
	DC injection braking		Starting frequency:0.0 to 60.0Hz, Braking time: 0.0 to 30.0s, Braking level:0 to 100%														
DC reactor (DCR) (*10)			Optional														
Applicable safety standards			UL508C, C22.2No.14, EN61800-5-1:2007, EN61800-5-2:2007 SIL2, EN ISO13849-1:2008 PL=d Cat.3, EN954-1:1996 Cat.3														
Enclosure (IEC60529)			IP20 (IEC60529) closed type, UL open type (UL 50)											IP00 open type, UL open type			
Cooling method			Natural cooling			Fan cooling											
Weight/Mass [kg]			1.7	2	2.6	2.7	3	6.5	6.5	5.8	9.5	9.5	10	25	26	31	33

(75 to 630kW) HD (High Duty) spec for heavy load

Item			Specifications														
Type (FRN□□□G1S-4A)			75	90	110	132	160	200	220	280	315	355	400	500	630		
Nominal applied motor [kW] (*1)			75	90	110	132	160	200	220	280	315	355	400	500	630		
Output ratings	Rated capacity [kVA] (*2)		114	134	160	192	231	287	316	396	445	495	563	731	891		
	Rated voltage [V] (*3)		Three-phase 380 to 480V (with AVR)														
	Rated Current [A]		150	176	210	253	304	377	415	520	585	650	740	960	1170		
	Overload capability		150% for 1min, 200% for 3.0s														
	Rated frequency [Hz]		50, 60Hz														
Input ratings	Main circuit power Phases, voltage, frequency		Three-phase 380 to 480V, 50Hz Three-phase 380 to 480V, 60Hz														
	Auxiliary control power input Phases, voltage, frequency		Single-phase 380 to 480V, 50/60Hz														
	Auxiliary power input for fan Phases, voltage, frequency (*5)		Single-phase 380 to 440V, 50Hz Single-phase 380 to 480V, 60Hz														
	Voltage, frequency variations		Voltage:+10 to -15% (Voltage unbalance:2% or less (*6)) Frequency:+5 to -5%														
	Rated current [A] (*7)	with DCR	138	164	210	238	286	357	390	500	559	628	705	881	1115		
		without DCR	–	–	–	–	–	–	–	–	–	–	–	–	–		
	Required power supply capacity [kVA] (*8)	with DCR	96	114	140	165	199	248	271	347	388	436	489	611	773		
Braking	Torque [%] (*9)		10 to 15%														
	Braking transistor		–														
	Min. ohmic value [Ω] Torque [%]		–														
	DC injection braking		Starting frequency:0.0 to 60.0Hz, Braking time: 0.0 to 30.0s, Braking level:0 to 100%														
DC reactor (DCR) (*10)			Optional														
Applicable safety standards (*11)			UL508C, C22.2No.14, EN61800-5-1:2007, EN61800-5-2:2007 SIL2, EN ISO13849-1:2008 PL=d Cat.3, EN954-1:1996 Cat.3														
Enclosure (IEC60529)			IP00, UL open type														
Cooling method			Fan cooling														
Weight/Mass [kg]			42	62	64	94	98	129	140	245	245	330	330	530	530		

(*1) Fuji's 4-pole standard motor
(*2) Rated capacity is calculated by assuming the output rated voltage as 220V for three-phase 200V series and 440V for three-phase 400V series.
(*3) Output voltage cannot exceed the power supply voltage.
(*5) The auxiliary power input is used as an AC fan power input when combining the unit such as high power factor PWM converter with power regenerative function. (Generally not used.)
(*6) Interphase voltage unbalance ratio[%] = (max. voltage [V] - min. voltage [V])/3-phase average voltage [V]×67(See IEC61800-3.) Use the DC reactor (ACR: optional) when used with 2 to 3 % of unbalance ratio.
(*7) The value is calculated on assumption that the inverter is connected with a power supply capacity of 500kVA (or 10 times the inverter capacity if the inverter capacity exceeds 50kVA) and %X is 5%.
(*8) Obtained when a DC reactor (DCR) is used.
(*9) Average braking torque obtained by use of a motor. (Varies with the efficiency of the motor.)
(*10) A DC reactor (DCR) is an option. However, Inverters with a capacity of 75kW(HD spec) or above, 55kW(LD spec) or above, require a DCR to be connected. Be sure to connect it to those inverters.
(*11)FRN160,200,220,355 and 400G1□-4A can not apply to the C22.2 No.14.

Standard Specifications (Basic type)

Three-phase 400V series

(5.5 to 55kW) LD (Low Duty) spec for light load

Item			Specifications														
Type (FRN□□□G1S-4A)			–	–	–	–	–	5.5	7.5	11	15	18.5	22	30	37	45	55
Nominal applied motor [kW] (*1)			–	–	–	–	–	7.5	11	15	18.5	22	30	37	45	55	75
Output ratings	Rated capacity [kVA] (*2)		–	–	–	–	–	12	17	22	28	33	45	57	69	85	114
	Rated voltage [V] (*3)		Three-phase 380 to 480V (with AVR)														
	Rated Current [A]		–	–	–	–	–	16.5	23	30.5	37	45	60	75	91	112	150
	Overload capability		–					120% for 1min									
	Rated frequency [Hz]		–					50, 60Hz									
Input ratings	Main circuit power Phases, voltage, frequency		–					Three-phase 380 to 480V, 50/60Hz									
	Auxiliary control power input Phases, voltage, frequency		–					Single-phase 380 to 480V, 50/60Hz									
	Auxiliary power input for fan Phases, voltage, frequency (*5)		–					–									
	Voltage, frequency variations		–					Voltage:+10 to -15% (Voltage unbalance:2% or less (*6)) Frequency:+5 to -5%									
	Rated current [A] (*7)	with DCR	–	–	–	–	–	14.4	21.1	28.8	35.5	42.2	57.0	68.5	83.2	102	138
		without DCR	–	–	–	–	–	23.2	33.0	43.8	52.3	60.6	77.9	94.3	114	140	–
	Required power supply capacity [kVA] (*8)	with DCR	–	–	–	–	–	10	15	20	25	30	40	48	58	71	96
Braking	Torque [%] (*9)		–					70%		15%				7 to 12%			
	Braking transistor		–					Built-in						–			
	Min. ohmic value [Ω] Torque [%]		–					64 130%	48 120%	32 130%	24 140%	16 150%	16 130%	–			
	Built-in braking resistance		–					80Ω		–							
		Braking time[s]	–					3.7s	3.4s	–							
		%ED	–					2.2	1.4	–							
	DC injection braking		–					Starting frequency:0.0 to 60.0Hz, Braking time: 0.0 to 30.0s, Braking level:0 to 80%									
DC reactor (DCR) (*10)			–					Optional									
Applicable safety standards			–					UL508C, C22.2No.14, EN61800-5-1:2007, EN61800-5-2:2007 SIL2, EN ISO13849-1:2008 PL=d Cat.3, EN954-1:1996 Cat.3									
Enclosure (IEC60529)			–					IP20 (IEC60529) closed type, UL open type (UL 50)						IP00 open type, UL open type			
Cooling method			–					Fan cooling									
Weight/Mass [kg]			–					6.5	6.5	5.8	9.5	9.5	10	25	26	31	33

(75 to 630kW) LD (Low Duty) spec for light load

Item			Specifications														
Type (FRN□□□G1S-4A)			75	90	110	132	160	200	220	280	315	355	400	500	630		
Nominal applied motor [kW] (*1)			90	110	132	160	200	220	280	355	400	450	500	630	710		
Output ratings	Rated capacity [kVA] (*2)		134	160	192	231	287	316	396	495	563	640	731	891	1044		
	Rated voltage [V] (*3)		Three-phase 380 to 480V (with AVR)														
	Rated Current [A]		176	210	253	304	377	415	520	650	740	840	960	1170	1370		
	Overload capability		120% for 1min														
	Rated frequency [Hz]		50, 60Hz														
Input ratings	Main circuit power Phases, voltage, frequency		Three-phase 380 to 440V/50Hz Three-phase 380 to 480V/60Hz														
	Auxiliary control power input Phases, voltage, frequency		Single-phase 380 to 440V, 50/60Hz														
	Auxiliary power input for fan Phases, voltage, frequency (*5)		Single-phase 380 to 440V/50Hz Single-phase 380 to 480V/60Hz														
	Voltage, frequency variations		Voltage:+10 to -15% (Voltage unbalance:2% or less (*6)) Frequency:+5 to -5%														
	Rated current [A] (*7)	with DCR	164	210	238	286	357	390	500	628	705	789	881	1115	1256		
		without DCR	–	–	–	–	–	–	–	–	–	–	–	–	–		
	Required power supply capacity [kVA] (*8)	with DCR	114	140	165	199	248	271	347	436	489	547	611	773	871		
Braking	Torque [%] (*9)		7 to 12%														
	Braking transistor		–														
	Min. ohmic value [Ω] Torque [%]		–														
	DC injection braking		Starting frequency:0.0 to 60.0Hz, Braking time: 0.0 to 30.0s, Braking level:0 to 80%														
DC reactor (DCR) (*10)			Optional														
Applicable safety standards (*11)			UL508C, C22.2No.14, EN61800-5-1:2007, EN61800-5-2:2007 SIL2, EN ISO13849-1:2008 PL=d Cat.3, EN954-1:1996 Cat.3														
Enclosure (IEC60529)			IP00 open type, UL open type														
Cooling method			Fan cooling														
Weight/Mass [kg]			42	62	64	94	98	129	140	245	245	330	330	530	530		

(*1) Fuji's 4-pole standard motor
(*2) Rated capacity is calculated by assuming the output rated voltage as 220V for three-phase 200V series and 440V for three-phase 400V series.
(*3) Output voltage cannot exceed the power supply voltage.
(*5) The auxiliary power input is used as an AC fan power input when combining the unit such as high power factor PWM converter with power regenerative function. (Generally not used.)
(*6) Interphase voltage unbalance ratio[%] = (max. voltage [V] - min. voltage [V])/3-phase average voltage [V]×67(See IEC61800-3.) Use the DC reactor (ACR: optional) when used with 2 to 3 % of unbalance ratio.
(*7) The value is calculated on assumption that the inverter is connected with a power supply capacity of 500kVA (or 10 times the inverter capacity if the inverter capacity exceeds 50kVA) and %X is 5%.
(*8) Obtained when a DC reactor (DCR) is used.
(*9) Average braking torque obtained by use of a motor. (Varies with the efficiency of the motor.)
(*10) A DC reactor (DCR) is an option. However, Inverters with a capacity of 75kW(HD spec) or above, 55kW(LD spec) or above, require a DCR to be connected. Be sure to connect it to those inverters.
(*11)FRN160,200,220,355 and 400G1□-4A can not apply to the C22.2 No.14.

Three-phase 200V series

HD (High Duty) spec for heavy load

Item			Specifications																
Type (FRN□□□G1S-2A)			0.4	0.75	1.5	2.2	3.7	5.5	7.5	11	15	18.5	22	30	37	45	55	75	90
Nominal applied motor [kW] (*1)			0.4	0.75	1.5	2.2	3.7	5.5	7.5	11	15	18.5	22	30	37	45	55	75	90
Output ratings	Rated capacity [kVA] (*2)		1.1	1.9	3.0	4.2	6.8	10	14	18	24	28	34	45	55	68	81	107	131
	Rated voltage [V] (*3)		Three-phase 200 to 240V (with AVR)											Three-phase 200 to 230V (with AVR)					
	Rated Current [A]		3	5	8	11	18	27	37	49	63	76	90	119	146	180	215	283	346
	Overload capability		150% for 1min, 200% for 3.0s																
	Rated frequency [Hz]		50, 60Hz																
Input ratings	Main circuit power Phases, voltage, frequency		Three-phase 200 to 240V, 50/60Hz											Three-phase 200 to 220V, 50Hz Three-phase 200 to 230V, 60Hz					
	Auxiliary control power input Phases, voltage, frequency		–		Single-phase 200 to 240V, 50/60Hz									Single-phase 200 to 230V, 50/60Hz					
	Auxiliary power input for fan Phases, voltage, frequency (*5)		–												Single-phase 200 to 220V, 50Hz Single-phase 200 to 230V, 60Hz				
	Voltage, frequency variations		Voltage:+10 to -15% (Voltage unbalance:2% or less (*6)) Frequency:+5 to -5%																
	Rated current [A] (*7)	with DCR	1.6	3.2	6.1	8.9	15	21.1	28.8	42.2	57.6	71.0	84.4	114	138	167	203	282	334
		without DCR	3.1	5.3	9.5	13.2	22.2	31.5	42.7	60.7	80.1	97.0	112	151	185	225	270	–	–
	Required power supply capacity [kVA] (*8)	with DCR	0.6	1.2	2.2	3.1	5.2	7.4	10	15	20	25	30	40	48	58	71	98	116
Braking	Torque [%] (*9)		150%		100%					20%				10 to15%					
	Braking transistor		Built-in											–					
	Min. ohmic value [Ω]		100		40		24	16	12	8	6	4		–					
	Torque [%]		180%		180%		180%	180%	180%	180%	180%	180%							
	Built-in braking resistance		100Ω		40Ω			20Ω		–									
		Braking time[s]	5s							–									
		%ED	5	3	5	3	2	3	2	–									
	DC injection braking		Starting frequency:0.0 to 60.0Hz, Braking time: 0.0 to 30.0s, Braking level:0 to 100%																
DC reactor (DCR) (*10)			Optional																
Applicable safety standards			UL508C, C22.2No.14, EN61800-5-1:2007, EN61800-5-2:2007 SIL2, EN ISO13849-1:2008 PL=d Cat.3, EN954-1:1996 Cat.3																
Enclosure (IEC60529)			IP20 (IEC60529) closed type, UL open type (UL 50)											IP00 open type, UL open type					
Cooling method			Natural cooling			Fan cooling													
Weight/Mass [kg]			1.7	2	2.8	3	3	6.5	6.5	5.8	9.5	9.5	10	25	32	42	43	62	105

LD (Low Duty) spec for light load

Item			Specifications																
Type (FRN□□□G1S-2A)			–	–	–	–	–	5.5	7.5	11	15	18.5	22	30	37	45	55	75	90
Nominal applied motor [kW] (*1)			–	–	–	–	–	7.5	11	15	18.5	22	30	37	45	55	75	90	110
Output ratings	Rated capacity [kVA] (*2)		–	–	–	–	–	11	16	20	25	30	43	55	68	81	107	131	158
	Rated voltage [V] (*3)							Three-phase 200 to 240V (with AVR)						Three-phase 200 to 230V (with AVR)					
	Rated Current [A] (*4)		–	–	–	–	–	31.8 (29)	46.2 (42)	59.4 (55)	74.8 (68)	88 (80)	115 (107)	146	180	215	283	346	415
	Overload capability		–					120% for 1min											
	Rated frequency [Hz]		–					50, 60Hz											
Input ratings	Main circuit power Phases, voltage, frequency		–					Three-phase 200 to 240V, 50/60Hz						Three-phase 200 to 220V, 50Hz Three-phase 200 to 230V, 60Hz					
	Auxiliary control power input Phases, voltage, frequency		–					Single-phase 200 to 240V, 50/60Hz						Single-phase 200 to 230V, 50/60Hz					
	Auxiliary power input for fan Phases, voltage, frequency (*5)		–					–							Single-phase 200 to 220V, 50Hz Single-phase 200 to 230V, 60Hz				
	Voltage, frequency variations		–					Voltage:+10 to -15% (Voltage unbalance:2% or less (*6)) Frequency:+5 to -5%											
	Rated current [A] (*7)	with DCR	–	–	–	–	–	28.8	42.2	57.6	71.0	84.4	114	138	167	203	282	334	410
		without DCR	–	–	–	–	–	42.7	60.7	80.1	97.0	112	151	185	225	270	–	–	–
	Required power supply capacity [kVA] (*8)	with DCR	–	–	–	–	–	10	15	20	25	30	40	48	58	71	98	116	143
Braking	Torque [%] (*9)		–					70%		15%				7 to12%					
	Braking transistor		–					Built-in						–					
	Min. ohmic value [Ω]		–					16	12	8	6	4	4	–					
	Torque [%]							130%	120%	130%	140%	150%	130%						
	Built-in braking resistance		–					20Ω		–									
		Braking time[s]	–					3.7s	3.4s	–									
		%ED	–					2.2	1.4	–									
	DC injection braking		–					Starting frequency:0.0 to 60.0Hz, Braking time: 0.0 to 30.0s, Braking level:0 to 80%											
DC reactor (DCR) (*10)			–					Optional											
Applicable safety standards			–					UL508C, C22.2No.14, EN61800-5-1:2007, EN61800-5-2:2007 SIL2, EN ISO13849-1:2008 PL=d Cat.3, EN954-1:1996 Cat.3											
Enclosure (IEC60529)			–					IP20 (IEC60529) closed type, UL open type(UL 50)						IP00 open type, UL open type					
Cooling method			–					Fan cooling											
Weight/Mass [kg]			–					6.5	6.5	5.8	9.5	9.5	10	25	32	42	43	62	105

(*1) Fuji's 4-pole standard motor
(*2) Rated capacity is calculated by assuming the output rated voltage as 220V for three-phase 200V series and 440V for three-phase 400V series.
(*3) Output voltage cannot exceed the power supply voltage.
(*4) When using the inverter in the ambient temperature of 40℃ or over and with carrier frequency at 3kHz or higher, adjust the current under continuous running to be the value in ( ) or lower by controlling the load.
(*5) The auxiliary power input is used as an AC fan power input when combining the unit such as high power factor PWM converter with power regenerative function. (Generally not used.)
(*6) Interphase voltage unbalance ratio[%] = (max. voltage [V] - min. voltage [V])/3-phase average voltage [V]×67(See IEC61800-3.) Use the DC reactor (ACR: optional) when used with 2 to 3 % of unbalance ratio.
(*7) The value is calculated on assumption that the inverter is connected with a power supply capacity of 500kVA (or 10 times the inverter capacity if the inverter capacity exceeds 50kVA) and %X is 5%.
(*8) Obtained when a DC reactor (DCR) is used.
(*9) Average braking torque obtained by use of a motor. (Varies with the efficiency of the motor.)
(*10) A DC reactor (DCR) is an option. However, Inverters with a capacity of 75kW(HD spec) or above, 55kW(LD spec) or above, require a DCR to be connected. Be sure to connect it to those inverters.

Standard Specifications (EMC filter built-In type)

Three-phase 400V series

(0.4 to 55kW) HD (High Duty) spec for heavy load

Item			Specifications														
Type (FRN□□□G1E-4A)			0.4	0.75	1.5	2.2	3.7	5.5	7.5	11	15	18.5	22	30	37	45	55
Nominal applied motor [kW] (*1)			0.4	0.75	1.5	2.2	3.7	5.5	7.5	11	15	18.5	22	30	37	45	55
Output ratings	Rated capacity [kVA] (*2)		1.1	1.9	2.8	4.1	6.8	10	14	18	24	29	34	45	57	69	85
	Rated voltage [V] (*3)		Three-phase 380 to 480V (with AVR)														
	Rated Current [A]		1.5	2.5	4	5.5	9	13.5	18.5	24.5	32	39	45	60	75	91	112
	Overload capability		150% for 1min, 200% for 3.0s														
	Rated frequency [Hz]		50, 60Hz														
Input ratings	Main circuit power Phases, voltage, frequency		Three-phase 380 to 480V, 50/60Hz														
	Auxiliary control power input Phases, voltage, frequency		–		Single-phase 380 to 480V, 50/60Hz												
	Auxiliary power input for fan Phases, voltage, frequency (*5)		–														
	Voltage, frequency variations		Voltage:+10 to -15% (Voltage unbalance:2% or less (*6)) Frequency:+5 to -5%														
	Rated current [A] (*7)	with DCR	0.85	1.6	3.0	4.5	7.5	10.6	14.4	21.1	28.8	35.5	42.2	57.0	68.5	83.2	102
		without DCR	1.7	3.1	5.9	8.2	13.0	17.3	23.2	33	43.8	52.3	80.6	77.9	94.3	114	140
	Required power supply capacity [kVA] (*8)	with DCR	0.6	1.2	2.1	3.2	5.2	7.4	10	15	20	25	30	40	48	58	71
Braking	Torque [%] (*9)		150%		100%					20%				10 to 15%			
	Braking transistor		Built-in											–			
	Min. ohmic value [Ω]		200		180		96	64	48	32	24	16		–			
	Torque [%]		180%		180%		180%	180%	180%	180%	180%	180%					
	Built-in braking resistance		720Ω	470Ω	160Ω			80Ω		–							
		Braking time[s]	5s							–							
		%ED	5	3	5	3	2	3	2	–							
	DC injection braking		Starting frequency:0.0 to 60.0Hz, Braking time: 0.0 to 30.0s, Braking level:0 to 100%														
EMC filter			EMC standard compliance: Category C3 is only emission and 2nd Env. is immunity. (EN61800-3:2004)														
DC reactor (DCR) (*10)			Optional														
Applicable safety standards			UL508C, C22.2No.14, EN61800-5-1:2007, EN61800-5-2:2007 SIL2, EN ISO13849-1:2008 PL=d Cat.3, EN954-1:1996 Cat.3														
Enclosure (IEC60529)			IP20(IEC60529) closed type, UL open type (UL 50)											IP00 open type, UL open type			
Cooling method			Natural cooling			Fan cooling											
Weight/Mass [kg]			1.8	2.1	2.7	2.9	3.2	6.8	6.9	6.2	10.5	10.5	11.2	26	27	32	33

(75 to 630kW) HD (High Duty) spec for heavy load

Item			Specifications														
Type (FRN□□□G1E-4A)			75	90	110	132	160	200	220	280	315	355	400	500	630		
Nominal applied motor [kW] (*1)			75	90	110	132	160	200	220	280	315	355	400	500	630		
Output ratings	Rated capacity [kVA] (*2)		114	134	160	192	231	287	316	396	445	495	563	731	891		
	Rated voltage [V] (*3)		Three-phase 380 to 480V (with AVR)														
	Rated Current [A]		150	176	210	253	304	377	415	520	585	650	740	960	1170		
	Overload capability		150% for 1min, 200% for 3.0s														
	Rated frequency [Hz]		50, 60Hz														
Input ratings	Main circuit power Phases, voltage, frequency		Three-phase 380 to 440V/50Hz Three-phase 380 to 480V/60Hz														
	Auxiliary control power input Phases, voltage, frequency		Single-phase 380 to 480V, 50/60Hz														
	Auxiliary power input for fan Phases, voltage, frequency (*5)		Single-phase 380 to 440V/50Hz Single-phase 380 to 480V/60Hz														
	Voltage, frequency variations		Voltage:+10 to -15% (Voltage unbalance:2% or less (*6)) Frequency:+5 to -5%														
	Rated current [A] (*7)	with DCR	138	164	201	238	286	357	390	500	559	628	705	881	1115		
		without DCR	–	–	–	–	–	–	–	–	–	–	–	–	–		
	Required power supply capacity [kVA] (*8)	with DCR	96	114	140	165	199	248	271	347	388	436	489	611	773		
Braking	Torque [%] (*9)		10 to 15%														
	Braking transistor		–														
	Min. ohmic value [Ω] Torque [%]		–														
	DC injection braking		Starting frequency:0.0 to 60.0Hz, Braking time: 0.0 to 30.0s, Braking level:0 to 100%														
EMC filter			EMC standard compliance: Category C3 is only emission and 2nd Env. is immunity. (EN61800-3:2004)														
DC reactor (DCR) (*10)			Optional														
Applicable safety standards (*11)			UL508C, C22.2No.14, EN61800-5-1:2007, EN61800-5-2:2007 SIL2, EN ISO13849-1:2008 PL=d Cat.3, EN954-1:1996 Cat.3														
Enclosure (IEC60529)			IP00 open type, UL open type														
Cooling method			Fan cooling														
Weight/Mass [kg]			42	62	64	94	98	129	140	245	245	330	330	530	530		

(*1) Fuji's 4-pole standard motor
(*2) Rated capacity is calculated by assuming the output rated voltage as 220V for three-phase 200V series and 440V for three-phase 400V series.
(*3) Output voltage cannot exceed the power supply voltage.
(*5) The auxiliary power input is used as an AC fan power input when combining the unit such as high power factor PWM converter with power regenerative function. (Generally not used.)
(*6) Interphase voltage unbalance ratio[%] = (max. voltage [V] - min. voltage [V])/3-phase average voltage [V] ×67(See IEC61800-3.) Use the DC reactor (ACR: optional) when used with 2 to 3 % of unbalance ratio.
(*7) The value is calculated on assumption that the inverter is connected with a power supply capacity of 500kVA (or 10 times the inverter capacity if the inverter capacity exceeds 50kVA) and %X is 5%.
(*8) Obtained when a DC reactor (DCR) is used.
(*9) Average braking torque obtained by use of a motor. (Varies with the efficiency of the motor.)
(*10) A DC reactor (DCR) is an option. However, Inverters with a capacity of 75kW(HD spec) or above, 55kW(LD spec) or above, require a DCR to be connected. Be sure to connect it to those inverters.
(*11)FRN160,200,220,355 and 400G1□-4A can not apply to the C22.2 No.14.

Three-phase 400V series

(5.5 to 55kW) LD (Low Duty) spec for light load

Item			Specifications														
Type (FRN□□□G1E-4A)			–	–	–	–	–	5.5	7.5	11	15	18.5	22	30	37	45	55
Nominal applied motor [kW] (*1)			–	–	–	–	–	7.5	11	15	18.5	22	30	37	45	55	75
Output ratings	Rated capacity [kVA] (*2)		–	–	–	–	–	12	17	22	28	33	45	57	69	85	114
	Rated voltage [V] (*3)		Three-phase 380 to 480V (with AVR)														
	Rated Current [A]		–	–	–	–	–	16.5	23	30.5	37	45	60	75	91	112	150
	Overload capability		–					120% for 1min									
	Rated frequency [Hz]		–					50, 60Hz									
Input ratings	Main circuit power Phases, voltage, frequency		–					Three-phase 380 to 480V, 50/60Hz									
	Auxiliary control power input Phases, voltage, frequency		–					Single-phase 380 to 480V, 50/60Hz									
	Auxiliary power input for fan Phases, voltage, frequency (*5)		–					–									
	Voltage, frequency variations		–					Voltage:+10 to -15% (Voltage unbalance:2% or less (*6)) Frequency:+5 to -5%									
	Rated current [A] (*7)	with DCR	–	–	–	–	–	14.4	21.1	28.8	35.5	42.2	57.0	68.5	83.2	102	138
		without DCR	–	–	–	–	–	23.2	33.0	43.8	52.3	60.6	77.9	94.3	114	140	–
	Required power supply capacity [kVA] (*8)	with DCR	–	–	–	–	–	10	15	20	25	30	40	48	58	71	96
Braking	Torque [%] (*9)		–					70%		15%				7 to 12%			
	Braking transistor		–					Built-in						–			
	Min. ohmic value [Ω] Torque [%]		–					64 130%	48 120%	32 130%	24 140%	16 150%	16 130%	–			
	Built-in braking resistance		–					80Ω		–							
		Braking time[s]	–					3.7s	3.4s	–							
		%ED	–					2.2	1.4	–							
	DC injection braking		–					Starting frequency:0.0 to 60.0Hz, Braking time: 0.0 to 30.0s, Braking level:0 to 80%									
EMC filter			–					EMC standard compliance: Category C3 is only emission and 2nd Env. is immunity. (EN61800-3:2004)									
DC reactor (DCR) (*10)			–					Optional									
Applicable safety standards			–					UL508C, C22.2No.14, EN61800-5-1:2007, EN61800-5-2:2007 SIL2, EN ISO13849-1:2008 PL=d Cat.3, EN954-1:1996 Cat.3									
Enclosure (IEC60529)			–					IP20 (IEC60529) closed type, UL open type (UL 50)						IP00 open type, UL open type			
Cooling method			–					Fan cooling									
Weight/Mass [kg]			–					6.8	6.9	6.2	10.5	10.5	11.2	26	27	32	33

(75 to 630kW) LD (Low Duty) spec for light load

Item			Specifications														
Type (FRN□□□G1E-4A)			75	90	110	132	160	200	220	280	315	355	400	500	630		
Nominal applied motor [kW] (*1)			90	110	132	160	200	220	280	355	400	450	500	630	710		
Output ratings	Rated capacity [kVA] (*2)		134	160	192	231	287	316	396	495	563	640	731	891	1044		
	Rated voltage [V] (*3)		Three-phase 380 to 480V (with AVR)														
	Rated Current [A]		176	210	253	304	377	415	520	650	740	840	960	1170	1370		
	Overload capability		120% for 1min														
	Rated frequency [Hz]		50, 60Hz														
Input ratings	Main circuit power Phases, voltage, frequency		Three-phase 380 to 440V/50Hz Three-phase 380 to 480V/60Hz														
	Auxiliary control power input Phases, voltage, frequency		Single-phase 380 to 440V, 50/60Hz														
	Auxiliary power input for fan Phases, voltage, frequency (*5)		Single-phase 380 to 440V/50Hz Single-phase 380 to 480V/60Hz														
	Voltage, frequency variations		Voltage:+10 to -15% (Voltage unbalance:2% or less (*6)) Frequency:+5 to -5%														
	Rated current [A] (*7)	with DCR	164	210	238	286	357	390	500	628	705	789	881	1115	1256		
		without DCR	–	–	–	–	–	–	–	–	–	–	–	–	–		
	Required power supply capacity [kVA] (*8)	with DCR	114	140	165	199	248	271	347	436	489	547	611	773	871		
Braking	Torque [%] (*9)		7 to 12%														
	Braking transistor		–														
	Min. ohmic value [Ω] Torque [%]		–														
	DC injection braking		Starting frequency:0.0 to 60.0Hz, Braking time: 0.0 to 30.0s, Braking level:0 to 80%														
EMC filter			EMC standard compliance: Category C3 is only emission and 2nd Env. is immunity. (EN61800-3:2004)														
DC reactor (DCR) (*10)			Optional														
Applicable safety standards (*11)			UL508C, C22.2No.14, EN61800-5-1:2007, EN61800-5-2:2007 SIL2, EN ISO13849-1:2008 PL=d Cat.3, EN954-1:1996 Cat.3														
Enclosure (IEC60529)			IP00 open type, UL open type														
Cooling method			Fan cooling														
Weight/Mass [kg]			42	62	64	94	98	129	140	245	245	330	330	530	530		

(*1) Fuji's 4-pole standard motor
(*2) Rated capacity is calculated by assuming the output rated voltage as 220V for three-phase 200V series and 440V for three-phase 400V series.
(*3) Output voltage cannot exceed the power supply voltage.
(*5) The auxiliary power input is used as an AC fan power input when combining the unit such as high power factor PWM converter with power regenerative function. (Generally not used.)
(*6) Interphase voltage unbalance ratio[%] = (max. voltage [V] - min. voltage [V])/3-phase average voltage [V] ×67(See IEC61800-3.) Use the DC reactor (ACR: optional) when used with 2 to 3 % of unbalance ratio.
(*7) The value is calculated on assumption that the inverter is connected with a power supply capacity of 500kVA (or 10 times the inverter capacity if the inverter capacity exceeds 50kVA) and %X is 5%.
(*8) Obtained when a DC reactor (DCR) is used.
(*9) Average braking torque obtained by use of a motor. (Varies with the efficiency of the motor.)
(*10) A DC reactor (DCR) is an option. However, Inverters with a capacity of 75kW(HD spec) or above, 55kW(LD spec) or above, require a DCR to be connected. Be sure to connect it to those inverters.
(*11)FRN160,200,220,355 and 400G1□-4A can not apply to the C22.2 No.14.

Common Specifications

Item			Explanation
Output frequency	Setting range	Maximum frequency	25 to 500 Hz (120 Hz for inverters in LD mode) (120 Hz under vector control without speed sensor, 200 Hz under vector control with speed sensor)
		Base frequency	25 to 500 Hz (in conjunction with the maximum frequency)
		Starting frequency	0.1 to 60.0 Hz (0.0 Hz under vector control with/without speed sensor)
		Carrier frequency	・0.75 to 16 kHz (HD mode: 0.4 to 55 kW, LD mode: 5.5 to 18.5 kW) ・0.75 to 10 kHz (HD mode: 75 to 400 kW, LD mode: 22 to 55 kW) ・0.75 to 6 kHz (HD mode: 500 and 630 kW , LD mode: 75 to 500 kW) ・0.75 to 4 kHz (LD mode: 630 kW) ・0.75 to 2 kHz (MD mode: 90 to 400 kW) Note: The carrier frequency may automatically drop depending upon the surrounding temperature or output current to protect the inverter. (The automatic drop function can be disabled.)
	Accuracy (Stability)		・Analog setting: ±0.2% of maximum frequency (at 25 ±10℃) ・Keypad setting: ±0.01% of maximum frequency (at -10 to +50℃)
	Setting resolution		・Analog setting: 1/3000 of maximum frequency (1/1500 for V2 input) ・Keypad setting: 0.01 Hz (99.99 Hz or less), 0.1 Hz (100.0 to 500.0 Hz) ・Link operation setting: Selectable from the following two types - 1/20000 of maximum frequency - 0.01 Hz (fixed)
	Speed control range (under vector control without speed sensor)		・1 : 200 (Minimum speed: Base speed, 4P, 7.5 to 1500 r/min) ・1 : 2 (Constant torque range: Constant output range)
	Speed control accuracy (under vector control without speed sensor)		・Analog setting: ±0.5% of base speed (at 25 ±10℃) ・Digital setting: ±0.5% of base speed (at -10 to +50℃)
	Speed control range (under vector control with speed sensor)		・1 : 1500 (Minimum speed: Base speed, 4P, 1 to 1500 r/min, 1024 p/r) ・1 : 4 (Constant torque range: Constant output range)
	Speed control accuracy (under vector control with speed sensor)		・Analog setting: ±0.2% of maximum frequency (at 25 ±10℃) ・Digital setting: ±0.01% of maximum frequency (at -10 to +50℃)
Functional safety	Stop function		・Safe torque off (STO: acc.EN61800-5-2:2007)
	Response time		・50ms or less (delay time to "Safe torque off" from turning off either terminal [EN1] or [EN2]
	SIL		・SIL 2 (Safety integrity level)
	PFH		・1.7×10^{-9} (Probability of a dangerous random hardware failure per hour)
	Category		・3 (EN ISO 13849-1:2008)
	Performance level		・d (EN ISO 13849-1:2008)
Control	Control method		・V/f control *1 ・Dynamic torque vector control (*2) ・V/f control, the slip compensation is available. (*3) ・V/f control with speed sensor (with an optional PG interface card mounted) (*4)(*8) ・Dynamic torque vector control with speed sensor (with an optional PG interface card mounted) (*5)(*8) ・Vector control without speed sensor (*6) (*8) ・Vector control with speed sensor (with an optional PG interface card mounted) (*7)
	Voltage/freq. characteristic		・Base frequency and max. output frequency can be set to 160 to 500V in common. ・The AVR control ON/OFF can be selected. (*1)(*4) ・Non-linear V/f setting (3 points)• Free voltage (0 to 500V) and frequency (0 to 500Hz) can be set. (*1)(*4)
	Torque boost		・Auto torque boost (for constant torque load) ・Manual torque boost: Desired torque boost (0.0 to 20.0%) can be set. ・Select application load with function code F37. (Variable torque load or constant torque load)
	Starting torque (HD mode)		・22kW or below: 200% or higher, 30kW or above: 180% or higher/set frequency: 0.3Hz (*6) ・22kW or below: 200% or higher, 30kW or above: 180% or higher/set frequency: 0.3Hz :Base frequency 50Hz, slip compensation and auto torque boost operation (*1) to (*4)
	Start/stop operation		Keypad ・Remote keypad: Start and stop with RUN and STOP keys (*9) ・Multi-function keypad: Start and stop with FWD, REV, and STOP keys
			External signals (digital inputs): Forward (Reverse) rotation, stop command (capable of 3-wire operation), coast-to-stop command, external alarm, alarm reset, etc.
			Link operation: Operation through RS-485 or field bus (option) communications, or USB (*9) (provided in remote keypad)
			Switching operation command: Remote/Local switching, link switching
	Enable input (Safety stop function)		Opening the circuit between terminals [EN1] / [EN2] and [PLC] stops the inverter's output transistor (coast-to-stop). (Compliant with ISO 13849-1)
	Frequency command		・Keypad: ∧ and ∨ keys ・Analog input (Analog input can be set with external voltage/current input): 0 to ± 10 VDC/0 to ± 100% (terminals [12], [V2]) +4 to +20 mA DC (0 to 20 mA DC)/0 to 100% (terminal [C1]) ・UP/DOWN operation : Frequency can be increased or decreased while the digital input signal is ON. ・Multi-frequency : Selectable from 16 steps (step 0 to 15) ・Digital signal : 16bit parallel (binary, BCD) ・Pulse train input (standard): Pulse input = [X7] terminal, Rotational direction = One of the digital input terminals except [X7] ・Link operation: Various buses (option) ・Reference frequency switching, Remote/local mode switching, Auxiliary frequency setting, Proportional operation setting, and Inverse operation
	Acceleration/ deceleration time		0.00 to 6000 s Linear/S-curve/curvilinear, Acceleration/deceleration time settings 1 to 4 switchable

	Item	Explanation
Control	Stop control	・Running continued at the stop frequency, coast-to-stop, or force to stop. ・DC braking: Braking starting frequency (up to 60 Hz), time (up to 30.0 s), and operation level (up to 100%) ・Zero speed control (under vector control with speed sensor.)
	Auto-restart after momentary power failure	・Trip immediately, trip after recovery from power failure, trip after deceleration to stop ・Continue to run, restart at the frequency at which the power failure occurred, restart at the starting frequency, restart after searching for idling motor speed
	Hardware current limiter	・Current limiter operation level (20 to 200%) ・Overcurrent limiting by hardware (This can be canceled.)
	Torque limiter	・Torque limit value (±300%) ・Torque limiter 1/2, torque limiter enabled/disabled, analog torque limit value
	Control functions	・Analog input adjustment (gain/offset/filter time constant), frequency limiter (high and low), bias frequency, jump frequency, jogging operation, pre-excitation, switch to commercial power, commercial power switching sequence, cooling fan ON/OFF control, select motor 2 to 4, protect motor from dew condensation, universal DI, universal DO, universal AO, rotational direction limitation ・Overload prevention control, auto search, slip compensation, automatic deceleration (anti-regenerative control), droop control, PID process control, PID dancer control, Deceleration characteristics (improving braking capability), auto energy saving function ・Offline tuning ・Life early warning, cumulative inverter run time, cumulative motor run time ・Light alarm, retry, command loss detection
	Digital input	Run forward command, run reverse command, select multi-frequency (0 to 15 steps), select ACC/DEC time (ACC/DEC time 1 to 4), enable 3-wire operation, coast to a stop, reset alarm, enable external alarm trip, ready for jogging, select frequency command 2/1, select motor 1 to 4, enable DC braking, select torque limiter level, switch to commercial power (50 Hz), switch to commercial power (60 Hz), UP (increase output frequency), DOWN (decrease output frequency), enable data change with keypad, cancel PID control, switch normal/inverse operation, interlock, enable communications link via RS-485 or fieldbus (option), universal DI, enable auto search for idling motor speed at starting, force to stop, pre-excitation, reset PID integral and differential components, hold PID integral component, select local (keypad) operation, protect the motor from dew condensation, enable internal sequence to commercial lines (50 Hz), enable internal sequence to commercial lines (60 Hz), pulse train input, pulse train sign, switch to commercial power operation (motor 1 to 4), select droop control, servo-lock command (under PG vector control), cancel PG alarm (under PG vector control)
	Transistor output	Inverter running, frequency arrival signal 1/3, frequency detected (3 points), undervoltage detected (inverter stopped), torque polarity detected, inverter output limiting, auto-restarting after momentary power failure, motor overload early warning, keypad operation, inverter ready to run, switch motor power between commercial line and inverter output (inverter input/output/commercial power), select the AX terminal function (primary side MC), inverter output limiting with delay, cooling fan in operation, auto-resetting, universal DO, heat sink overheat early warning, service lifetime alarm, reference loss detected, inverter output on, overload prevention control, current detected (3 points), low level current detected, PID alarm, under PID control, PID control stopped due to slow flowrate, low output torque detected, torque detected (2 points), switched to motor 1 to 4, run forward signal, run reverse signal, inverter in remote operation, PTC status detection enabled, brake signal, analog frequency reference loss on the terminal [C1], inverter keeping speed output, speed arrived, PG error detected, maintenance timer, light alarm, alarm relay contact output (for any fault), braking resistor broken, positioning completion signal, Enable circuit failure detected
	Analog output	Terminals [FM1] and [FM2]: Output a selected signal with analog DC voltage (0 to +10 V) or analog DC current (4 to 20 mA) Selectable output signals: Output frequency (before slip compensation, after slip compensation), output current, output voltage, output torque, load factor, input power, PID feedback amount (PV), speed (PG feedback value), DC link bus voltage, universal AO, motor output, calibration, PID command (SV), PID output (MV)
Indication	Running/stopping	Speed monitor (reference frequency (Hz), output frequency, motor speed, load shaft speed, line speed, speed in %) Output current, output voltage, torque calculation value, input power, PID command value, PID feedback amount, PID output, load factor, motor output, torque current, flux command, analog signal input monitor, input watt-hour Life early warning, cumulative inverter run time, cumulative motor run time, input watt-hour, number of startups I/O checking, energy-saving monitor (input power, input power x coefficient (fee for input power))
	Trip mode	Trip history: Saves and displays the last 4 trip factors and their detailed description.
Environment	Installation location	・Shall be free from corrosive gases, flammable gases, oil mist, dusts, direct sunlight.(Pollution degree 2 (IEC60664-1)). Indoor use only.
	Ambient temperature	・-10 to +50°C (-10 to +40°C when installed side-by-side without clearance (22kW or below))
	Ambient humidity	・5 to 95% RH (without condensation)
	Altitude	・Lower than 1,000m
	Vibration	200 V 55 kW, 400 V 75 kW or below 3 mm: 2 to less than 9 Hz, 9.8 m/s²: 9 to less than 20 Hz, 2 m/s²: 20 to less than 55 Hz, 200 V 75 kW, 400 V 90 kW or above 3 mm: 2 to less than 9 Hz 2 m/s²: 9 to less than 55 Hz 1 m/s² : 55
	Storage temperature	-25 to +65°C
	Storange humidity	・5 to 95% RH (without condensation)
	Measures against sulfide gases	Coating specification: Wider area will be coated than current models. (TBD) Full coating is available by BTO.
Other features	Communications	RS-485 COM port 1 (for keypad connection), RS-485 COM port 2 (on terminal board), and USB port (on the keypad face)
	Protection against momentary power failure	Upon detection of a momentary power failure lasting more than 15 ms, this function stops the inverter output. If restart after momentary power failure is selected, this function invokes a restart process if power is restored within a predetermined period (allowable momentary power failure time).

(*1) Effective function in V/f control
(*2) Effective function in dynamic torque vector control
(*3) Effective function when the slip compensation is made active under V/f control
(*4) Effective function under the V/f control with speed sensor (PG option is necessary.)
(*5) Effective function in dynamic torque vector control with speed sensor. (PG option is necessary.)
(*6) Effective function in vector control without speed sensor
(*7) Effective function in vector control with speed sensor (PG option is necessary.)
(*8) Function not incorporated in the inverters of initial version
(*9)These function can be used by using keypad(option)

Wiring of main circuit terminal and grounding terminal

■Basic wiring diagram

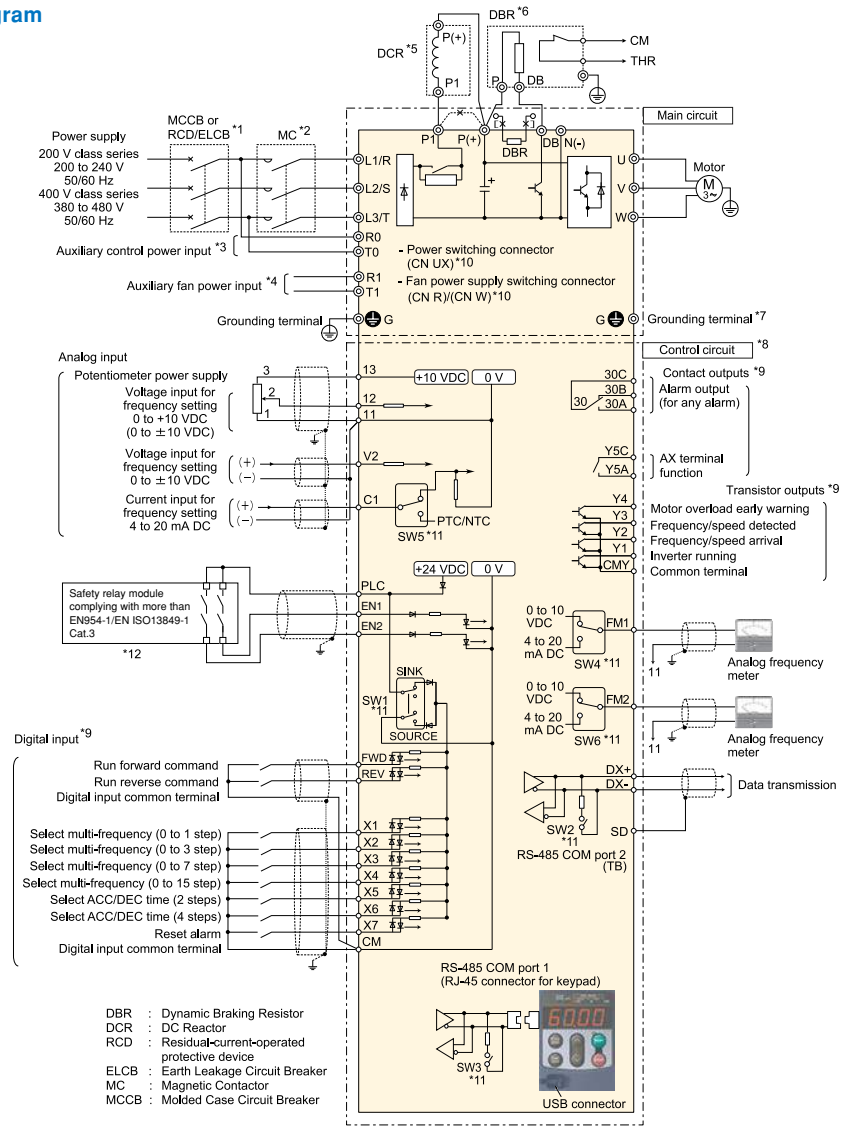

*1 Install a recommended molded case circuit breaker (MCCB) or residual-current-operated protective device (RCD)/earth leakage circuit breaker (ELCB) (with overcurrent protection function) in the primary circuit of the inverter to protect wiring. Ensure that the circuit breaker capacity is equivalent to or lower than the recommended capacity.

*2 Install a magnetic contactor (MC) for each inverter to separate the inverter from the power supply, apart from the MCCB or RCD/ELCB, when necessary. Connect a surge absorber in parallel when installing a coil such as the MC or solenoid near the inverter.

*3 To retain an alarm output signal ***ALM*** issued on inverter's programmable output terminals by the protective function or to keep the keypad alive even if the main power has shut down, connect these terminals to the power supply lines. Without power supply to these terminals, the inverter can run.

*4 Normally no need to be connected. Use these terminals when the inverter is equipped with a high power-factor, regenerative PWM converter (RHC series).

*5 When connecting an optional DC reactor (DCR), remove the jumper bar from the terminals P1 and P(+).Inverters with a capacity of 55 kW in LD mode and inverters with 75 kW or above require a DCR to be connected. Be sure to connect it to those inverters. Use a DCR when the capacity of the power supply transformer exceeds 500 kVA and is 10 times bigger or more than the inverter rated capacity, or when there are thyristor-driven loads in the same power supply line.

*6 Inverters with a capacity of 7.5 kW or below have a built-in braking resistor (DBR) between the terminals P(+) and DB. When connecting an external braking resistor (DBR), be sure to disconnect the built-in one.

*7 Grounding terminal for the motor. Use this terminal if needed.

*8 For control signal wires, use twisted or shielded-twisted wires. When using shielded-twisted wires, connect the shield of them to the common terminals of the control circuit. To prevent malfunction due to noise, keep the control circuit wiring away from the main circuit wiring as far as possible (recommended: 10 cm or more). Never install them in the same wire duct. When crossing the control circuit wiring with the main circuit wiring, set them at right angles.

*9 The connection diagram shows factory default functions assigned to digital input terminals [X1] to [X7], [FWD] and [REV], transistor output terminals [Y1] to [Y4], and relay contact output terminals [Y5A/C] and [30A/B/C].

*10 Switching connectors in the main circuits.

*11 Slide switches on the control printed circuit board (control PCB). Use these switches to customize the inverter operations.

*12 When using the Enable inputs function (STO) be sure to remove the jumper wire from terminals [EN1]/[EN2] and [PLC]. For opening and closing the hardware circuit between terminals [EN1]/[EN2] and [PLC], use safety components such as safety relays and safety switches that comply with ISO 13849-1 Category 3 or higher. Be sure to use shielded wires exclusive to terminals [EN1]/[EN2] and [PLC]. (Do not put them together with any other control signal wire in the same shielded core.) Ground the shielding layer.
"When not using the Enable input function, keep the terminals between [EN1]/[EN2] and [PLC] short-circuited with the jumper wire (factory default).

Terminal Functions

Terminal Functions

Classification	Symbol	Name	Functions	Remarks
Main circuit terminals	L1/R, L2/S, L3/T	Main circuit power inputs	Connect the three-phase input power lines.	
	R0, T0	Auxiliary power input for the control circuit	Connect AC power lines.	
	R1,T1	Auxiliary power input for the fans	Normally, no need to use these terminals. Use these terminals for an auxiliary power input of the fans in a power system using a power regenerative PWM converter.	(200 V 37 kW or above) (400 V 75 kW or above)
	U,V,W	Inverter outputs	Connect a three-phase motor.	
	P(+),P1	DC reactor connection	Connect a DC reactor (DCR).	
	P(+),N(-)	DC link bus	Terminal for DC bus link system.	
	P(+),DB	Braking resistor	Connect an external braking resistor (option).	(22kW or below)
	⏚G	Grounding for inverter	Grounding terminals for the inverter.	
Analog input	[13]	Power supply for the potentiometer	Power supply (+10 VDC) for frequency command potentiometer (Variable resistor: 1 to 5kW) The potentiometer of 1/2 W rating or more should be connected. (10 VDC, 10 mADC max.)	
	[12]	Analog setting voltage input	· External input voltage to be used as a frequency command. 0 to +10 VDC/ 0% to 100% (0 to +5 VDC/ 0% to 100%) 0 to ±10 VDC/ 0% to ±100% (0 to ±5 VDC/ 0% to ±100%)	Input impedance: 22kΩ Maximum input ±15 VDC
		(Inverse operation)	· +10 to 0 VDC/ 0 to100%	
		(PID control)	Used as PID command value or PID feedback signal.	Gain: 200%
		(Auxiliary frequency setting)	· Used as additional auxiliary setting to various frequency settings.	Offset: ±5%
		(Gain setting)	· Used as gain for the frequency command. 0% to 100% for 0 to 10 V	Setting filter: 5 s
		(Torque limit value)	· Analog torque limit value	
		(Torque command)	· Analog torque command value *6*7	*8
		(Analog input monitor)	· Enables peripheral analog signals to be displayed on the keypad. (Display coefficient valid)	
	[C1]	Analog setting current input	· External input voltage to be used as a frequency command. 4 to 20 mADC (0 to 20 mADC)/ 0% to 100%	Input impedance: 250Ω Maximum input 30 mADC
		(Inverse operation)	· 20 to 4 mADC (20 to 0 mADC)/ 0% to 100%	
		(PID control)	Used as PID command value or PID feedback signal.	Gain: 200%
		(PTC/NTC thermistor connection)	· Connect a PTC/NTC thermistor for motor protection. (Switchable)	Offset: ±5%
		(Auxiliary frequency setting)	· Used as additional auxiliary setting to various frequency settings.	Setting filter: 5 s
		(Gain setting)	· Used as gain for the frequency command. 0% to 100% for 4 to 20 mA (0 to 20 mA)	
		(Torque limit value)	· Analog torque limit value	
		(Torque command)	· Analog torque command value *6*7	*8
		(Analog input monitor)	· Enables peripheral analog signals to be displayed on the keypad. (Display coefficient valid)	
	[V2]	Analog setting voltage input	· External input voltage to be used as a frequency command. 0 to +10 VDC/ 0 to 100% (0 to +5 VDC/ 0 to100%) 0 to ±10 VDC/ 0 to ±100% (0 to ±5 VDC/ 0 to ±100%)	Input impedance: 22kΩ Maximum input ±15 VDC
		(Inverse operation)	· +10 to 0 VDC/ 0 to100%	
		(PID control)	Used as PID command value or PID feedback signal.	Gain: 200%
		(Auxiliary frequency setting)	· Used as additional auxiliary setting to various frequency settings.	Offset: ±5%
		(Gain setting)	· Used as gain for the frequency command. 0% to 100% for 0 to 10 V	Setting filter: 5 ss
		(Torque limit value)	· Analog torque limit value	
		(Torque command)	· Analog torque command value *6*7	*8
		(Analog input monitor)	· Enables peripheral analog signals to be displayed on the keypad. (Display coefficient valid)	
	[11] (2 terminals)	Analog common	Common terminals for frequency command signals (12, 13, C1, V2, FM1,FM2).	These terminals are electrically isolated from terminals [CM]s and [CMY]s.
Digital input	[X1]	Digital input 1	· The following functions can be assigned to terminals [X1] to [X7], [FWD], and [REV]. <Common functions> · SINK/SOURCE is changeable by using the internal slide switch. · These function codes may also switch the logic system between normal and negative to define how the inverter logic interprets either ON or OFF status of each terminal. Terminal [X7] can receive a pulse rate input. (Using the SY disables [X7].)	Operation current at ON Source current: 2.5 to 5 mA Source current: 11 to 16 mA (terminal [X7]) Voltage level: 2 V Operation current at OFF Allowable leakage current: 0.5 mA or less Voltage: 22 to 27 V
	[X2]	Digital input 2		
	[X3]	Digital input 3		
	[X4]	Digital input 4		
	[X5]	Digital input 5		
	[X6]	Digital input 6		
	[X7]	Digital input 7		
	[FWD]	Run forward commands		
	[REV]	Run reverse commands		
	[EN1]/[EN2]	Enable Inputs	·These terminals stop output transister (performing coast-to-stop) when the terminals EN1/EN2-PLC are turned off. These terminals must be used in source mode.	Source current at Turn-on : 5-10mA
	[CM]	Digital input common	Common terminals for digital input signals.	This terminal is electrically isolated from terminals [CM] and [11].
	[PLC] (2 terminals)	PLC signal power	Connect to PLC output signal power supply. This terminal also serves as 24 V power supply.	+24 V (22 to 27 V),Max. 100 mA
	(FWD)	Run forward	Turning the (FWD) ON runs the motor in the forward direction; turning it OFF decelerates it to a stop.	These terminal commands can be assigned only to terminals [FWD] and [REV]. The negative logic system never applies to those terminals.
	(REV)	Run reverse	Turning the (REV) ON runs the motor in the reverse direction; turning it OFF decelerates it to a stop.	Same as above.
	(SS1)	Select multi-frequency	The combination of the ON/OFF states of digital input signals (SS1), (SS2), (SS4) and (SS8) provides 16 different frequency choices.	
	(SS2)			
	(SS4)			
	(SS8)			
	(RT1)	Select ACC/DEC time (2 steps)	The combination of the ON/OFF states of (RT1) and (RT2) allows to select four acceleration/deceleration settings.	
	(RT2)	Select ACC/DEC time (4 steps)		
	(HLD)	Enable 3-wire operation	Used as a self-hold signal for 3-wire inverter operation. Turning the (HLD) ON self-holds the (FWD) or (REV) command; turning it OFF releases the self-holding.	

■Terminal Functions

Classification	Symbol	Name	Functions	Remarks
Digital input	(BX)	Coast to a stop	Turning the (BX) ON immediately shuts down the inverter output so that the motor coasts to a stop without issuing any alarms.	
	(RST)	Reset alarm	Turning the (RST) ON clears the alarm state.	Signal of 0.1 s or more
	(THR)	Enable external alarm trip	Turning the (THR) OFF immediately shuts down the inverter output so that the motor coasts to a stop, issuing OH2 alarm.	
	(JOG)	Ready for jogging	Turning the (JOG) ON readies the inverter for jogging. Turning the (FWD) or (REV) ON starts jogging in the rotation direction specified by the jogging frequency.	
	(Hz2/Hz1)	Select frequency command 2/1	Turning the (Hz2/Hz1) ON selects Frequency command 2. (If the PID control is enabled, this terminal command switches the PID command.)	
	(M2)	Select motor 2	The combination of the ON/OFF states of (M2), (M3) and (M4) allows to select Motors 1 to 4. Setting of all (M2), (M3) and (M4) to OFF selects Motor 1.	
	(M3)	Select motor 3		
	(M4)	Select motor 4		
	(DCBRK)	Enable DC braking	Turning the (DCBRK) ON activates DC braking.	
	(TL2/TL1)	Select torque limiter level	The (TL2/TL1) switches between torque limiters 1 and 2.	
	(SW50)	Switch to commercial power (50 Hz)	Turning the (SW50) OFF switches to commercial power, 50 Hz.*1～*3	
	(SW60)	Switch to commercial power (60 Hz)	Turning the (SW60) OFF switches to commercial power, 60 Hz.*1～*3	
	(UP)	UP (Increase output frequency)	While the (UP) is ON, the output frequency increases.	
	(DOWN)	DOWN (Decrease output frequency)	While the (DOWN) is ON, the output frequency decreases.	
	(WE-KP)	Enable data change with keypad	Only when the (WE-KP) is ON, function code data can be changed with the keypad.	
	(Hz/PID)	Cancel PID control	Turning the (Hz/PID) ON disables the PID control so that the inverter runs the motor with a reference frequency specified by any of the multi-frequency, keypad, analog input, etc.	
	(IVS)	Switch normal/inverse operation	The (INV) switches the output frequency control between normal (proportional to the input value) and inverse in PID process control and manual frequency command. Turning the (INV) ON selects the inverse operation.	
	(IL)	Interlock	In a configuration where a magnetic contactor (MC) is inserted between the inverter and motor, connecting the auxiliary contact of the magnetic contactor to the input terminal programmed with (IL) function allows to detect the momentary power failure.	
	(LE)	Enable communications link via RS-485 or field bus	Turning the (LE) ON gives priority to commands received via the RS-485 communications link or the field bus option.	
	(U-DI)	Universal DI	Using the (U-DI) enables the inverter to monitor arbitrary digital input signals sent from the peripheral equipment, transmitting the signal status to the host controller.	
	(STM)	Enable auto search for idling motor speed at starting	The (STM) enables auto search for idling motor speed at the start of operation.	
	(STOP)	Force to stop	Turning the (STOP) OFF causes the motor to decelerate to a stop forcedly in accordance with the specified deceleration time.	
	(PID-RST)	Reset PID integral and differential components	Turning the (PID-RST) ON resets PID integral and differential components.	
	(PID-HLD)	Hold PID integral component	Turning this terminal command ON holds the integral components of the PID processor.	
	(EXITE)	Pre-excitation	When this (EXITE) signal comes ON, preliminary excitation starts.*6*7	
	(LOC)	Select local (keypad) operation	Turning the (LOC) ON gives priority to run/frequency commands entered from the keypad.	
	(DWP)	Protect motor from dew condensation	Turning the (DWP) ON supplies a DC current to the motor that is stopped, in order to generate heat, preventing dew condensation.	
	(ISW50)	Enable integrated sequence to switch to commercial power (50 Hz)	Turning the (ISW50) OFF switches inverter operation to commercial-power operation in accordance with the inverter internal switching sequence (for 50 Hz).	
	(ISW60)	Enable integrated sequence to switch to commercial power (60 Hz)	Turning the (ISW60) OFF switches inverter operation to commercial-power operation in accordance with the inverter internal switching sequence (for 60 Hz).	
	(OLS)	Enable/disable overload stop function	Turning (OLS) ON enables the overload stop function.*1～*5	*8
	(PIN)	Pulse train input	Frequency command by pulse rate input.	Available only on terminal [X7] (E07)
	(SIGN)	Pulse train sign	Rotational direction command for pulse rate input. OFF: Forward, ON: Reverse	
	(CRUN-M1)	Count the run time of commercial power-driven motor 1	Turning the (CRUN-M1) ON accumulates the run time of motor 1 in commercial-power operation. (independent of run/stop and motor selected)	
	(CRUN-M2)	Count the run time of commercial power-driven motor 2	Turning the (CRUN-M2) ON accumulates the run time of motor 2 in commercial-power operation. (independent of run/stop and motor selected)	
	(CRUN-M3)	Count the run time of commercial power-driven motor 3	Turning the (CRUN-M3) ON accumulates the run time of motor 3 in commercial-power operation. (independent of run/stop and motor selected)	
	(CRUN-M4)	Count the run time of commercial power-driven motor 4	Turning the (CRUN-M4) ON accumulates the run time of motor 4 in commercial-power operation. (independent of run/stop and motor selected)	
	(DROOP)	Select droop control	Turning the(DROOP) ON enables the droop control.	
	(PG-CCL)	Cancel PG alarm	Turning the(PG-CCL) ON cancels PG alarm.*4*5*7	
	(LOCK)	Servo-lock command	Turning the(LOCK) ON enables the servo-lock control.*7	
	(NONE)	No function	No function assigned. Can be used as a input of the customizable logic function.	

Classification	Symbol	Name	Functions	Remarks
Transistor output	(PLC)	Transistor output power	Transistor output power supply (24VDC, 100mA DC max). (Note: Shared by the digital input PLC terminal.)	Short-circuit terminals [CM] and [CMY].
	[Y1]	Transistor output 1	Out of the following signals, the selected one will be issued. · These function codes may also switch the logic system between normal and negative to define how the inverter logic interprets either ON or OFF status of each terminal. Applicable to SINK and SOURCE (no switching is required).	Maximum voltage 27 VDC Maximum current 50 mADC Leakage current 0.1 mA or less ON voltage: Max. 2V (50 mA)
	[Y2]	Transistor output 2		
	[Y3]	Transistor output 3		
	[Y4]	Transistor output 4		
	[CMY]	Transistor output common	Common terminal for transistor output signal terminals.	This terminal is electrically isolated from terminals [CM] and [11].
	(RUN)	Inverter running	This signal is ON when the inverter is running with the starting frequency or higher.	
	(RUN2)	Inverter output on	This signal is ON when the inverter is running with the starting frequency or higher or when the DC braking is activated.	
	(DNZS)	Speed valid	This signal is turned ON when the speed command/actual speed exceeds the stop frequency; it is turned OFF when it is below the stop frequency. (Speed command and actual speed selectable.)	
	(FRUN)	Running forward	ON-signal is generated at forward rotation.	
	(RRUN)	Running reverse	ON-signal is generated at reverse rotation	
	(FAR)	Frequency (speed) arrival signal	ON-signal is generated when frequency / speed reaches at set-value.	
	(FAR3)	Frequency (speed) arrival signal 3	ON-signal is generated when frequency / speed reaches at set-value. When the run command is OFF, the frequency command is interpreted as zero and frequency arrival is judged under the premise.	
	(FDT)	Frequency (speed) detected	This output signal comes ON when the output frequency exceeds the frequency detection level and it goes OFF when the output frequency drops below the "Frequency detection level - Hysteresis width."	
	(FDT2)	Frequency (speed) detected 2		
	(FDT3)	Frequency (speed) detected 3		
	(LU)	Undervoltage detected (Inverter stopped)	This signal is ON when the undervoltage protection function is activated so that the motor is in an abnormal stop state.	
	(B/D)	Torque polarity detected	This signal comes ON when the inverter is driving the motor; it comes OFF when the inverter is braking the motor or stopped.	
	(IOL)	Inverter output limiting	This signal comes ON when the inverter is activating the current limiter, torque limiter, or anti-regenerative control (automatic deceleration).	
	(IOL2)	Inverter output limiting with delay	This signal comes ON when the inverter has been activating the current limiter, torque limiter, or anti-regenerative control (automatic deceleration) for at least 20 ms.	
	(IPF)	Auto-restarting after momentary power failure	This signal is kept ON during the period from when the inverter shuts down its output due to a momentary power failure until the restart is completed.	
	(OL)	Motor overload early warning	This signal comes ON when the value calculated by the electronic thermal overload protection exceeds the predetermined detection level. (applicable to Motor 1 only)	
	(KP)	Keypad operation enabled	This signal is ON when the inverter is in keypad operation.	
	(RDY)	Inverter ready to run	This signal comes ON when the inverter is ready to run.	
	(SW88)	Switch motor drive source between commercial power and inverter output (For MC on commercial line)	This controls the magnetic contactor located at the commercial power line side, for switching the motor drive source from the commercial power line to inverter output.	
	(SW52-2)	Switch motor drive source between commercial power and inverter output (For secondary side)	This controls the magnetic contactor located at the inverter output side (secondary side), for switching the motor drive source from the commercial power line to inverter output.	
	(SW52-1)	Switch motor drive source between commercial power and inverter output (For primary side)	This controls the magnetic contactor located at the inverter input side (primary side), for switching the motor drive source from the commercial power line to inverter output.	
	(SWM1)	Motor 1 selected	This signal comes ON when motor 1 is selected.	
	(SWM2)	Motor 2 selected	This signal comes ON when motor 2 is selected.	
	(SWM3)	Motor 3 selected	This signal comes ON when motor 3 is selected.	
	(SWM4)	Motor 4 selected	This signal comes ON when motor 4 is selected.	
	(AX)	Select AX terminal function (For MC on primary side)	This signal controls the magnetic contactor located at the inverter input side (primary side).	
	(FAN)	Cooling fan in operation	This signal informs the ON/OFF state of the cooling fan.	
	(TRY)	Auto-resetting	This output signal comes ON when auto-resetting is in progress.	
	(U-DO)	Universal DO	This signal commands a peripheral apparatus according to signal sent from the host controller.	
	(ID)	Current detected	This signal comes ON when the output current of the inverter has exceeded the detection level for the time longer than the specified timer period.	
	(ID2)	Current detected 2		
	(ID3)	Current detected 3		
	(TD1)	Torque detected 1	This signal comes ON when the output torque of the inverter has exceeded the detection level for the time longer than the specified timer period.	
	(TD2)	Torque detected 2		
	(OH)	Heat sink overheat early warning	This outputs a heat sink overheat early warning before an overheat trip actually happens. It is also used to detect an internal air circulation fan failure. (Applicable to inverters with 45kW or above for 200V class series or 75 kW or above for 400V class series)	
	(LIFE)	Lifetime alarm	This outputs a service lifetime alarm according to the internal lifetime criteria. It is also used to detect an internal air circulation fan failure. (Applicable to inverters with 45kW or above for 200V class series or 75 kW or above for 400V class series)	
	(PID-ALM)	PID alarm	This outputs an absolute-value alarm and deviation alarm when the PID control is enabled.	
	(PID-CTL)	Under PID control	This signal comes ON when the PID control is enabled.	
	(PID-STP)	Motor stopped due to slow flowrate under PID control	This signal is ON when the inverter is in a stopped state by the slow flowrate stopping function under the PID control. (The inverter is stopped even if a run command is entered.)	
	(REF OFF)	Reference loss detected	This signal comes ON when an analog frequency command is missing due to wire breaks.	
	(IDL)	Low current detected	This signal comes ON when the current has been below the preset current detection level for the time longer than the specified timer period.	
	(U-TL)	Low output torque detected	This signal comes ON when the torque value has been below the preset detection level for the time longer than the specified timer period.	

■Terminal Functions

Classification	Symbol	Name	Functions	Remarks
Transistor output	(OLP)	Overload prevention control	This output signal comes ON when the overload prevention control is activated.	
	(RMT)	In remote operation	This signal comes ON when the inverter is in the remote mode.	
	(BRKS)	Brake signal	Signal for Brake Control. Turn ON when the brake is released.	
	(MNT)	Maintenance timer	Alarm signal is generated when time passes or number of exceeds over the preset value	
	(THM)	Motor overheat detected by thermistor	This signal comes ON when the motor overheat is detected with the PTC/NTC thermistor.	
	(C1OFF)	Terminal [C1] wire break	When Input current to C1 terminal become less than 2mA, this is interpreted as wire brake and then ON-singal is generated.	
	(DSAG)	Speed agreement	This output signal comes ON when the difference between the detected speed and the commanded speed (frequency) becomes within the specified range for the time specified by the agreement timer.	
	(PG-ERR)	PG error detected	When speed error is greater than a certain value, ON-signal is generated.	
	(DECF)	Enable circuit failure detected	This signal comes ON when the circuit detecting the status of [EN] terminal is defective. (at single failure)	
	(ENOFF)	Enable input OFF	On-signal is generated when Enabe Inputs are turned off.	
	(DBAL)	Braking transistor broken	This signal comes ON when a deffect is detected in the braking transistor.	
	(PSET)	Positioning completion signal	This signal comes ON when the inverter has been servo-locked so that the motor is held within the positioning completion range.	
	(L-ALM)	Light alarm	When Alarm or warning, which is set as "light failure", is generated, inverter indicates "Light failure"on the display and generates this light failure signal.	
	(ALM)	Alarm output (for any alarm)	In case of alarm, ON-signal is generated.	
Relay output	[Y5A], [Y5C]	General purpose relay output	・As a general-purpose relay output, the same functions as Y1 to Y4 can be assigned. ・The logic value is switchable between [Y5A]-[Y5C] "excited" and "non-excited".	Contact rating: 250 VAC, 0.3 A cosφ=0.3
	[30A], [30B], [30C]	Alarm relay output (for any error)	・This outputs a non-voltage contact signal (1c) when the inverter is stopped with the protective function. ・As a general-purpose relay output, the same functions as Y1 to Y4 can be assigned. ・The logic value is switchable between [30A]-[30C] "excited" and "non excited".	48 VDC, 0.5A
Analog output	[FM1] [FM2]	Analog monitor 1 Analog monitor 2	The output can be either analog DC voltage (0 to 10 V) or analog DC current (4 to 20 mA). Any one of the following items can be output with the selected analog signal type. ・Output frequency (before slip compensation, after slip compensation) ・Output current ・Output voltage ・Output torque ・Load factor ・Input power ・PID feedback amount ・DC link bus voltage ・Universal AO ・Motor output ・Analog output test ・PID command ・PID output ・Speed detection (PG feedback value) *When the terminal is outputting 0 to 10 VDC, the connection cable can be up to two meters long with 10 kΩ impedance. *When the terminal is outputting 4-20 mA current, can be connected to a meter with a maximum input impedance of 500Ω Adjustable gain range: 0% to 300%	
	[11]	Analog common		
Communication	RJ-45 connector for the keypad	RS-485 communications port 1	One of the following protocoles can be selected: ・Modbus RTU ・Fuji general-purpose inverter protocol ・FRENIC Loader protocol (SX)	With power supply to the keypad
	[DX+]/[DX-]/[SD]	RS-485 communications port 2(Terminalson control PCB)	One of the following protocoles can be selected: ・Modbus RTU ・Fuji general-purpose inverter protocole	
	USB connector	USB port (On the keypad)	A USB port connector (Mini-B) that connects an inverter to a personal computer. FRENIC Loader.	Mounted on Remote Keypad (option)

*1 Effective function in V/f control
*2 Effective function in dynamic torque vector control
*3 Effective function when the slip compensation is made active under V/f control
*4 Effective function under the V/f control with speed sensor (PG option is necessary.)
*5 Effective function in dynamic torque vector control with speed sensor. (PG option is necessary.)
*6 Effective function in vector control without speed sensor
*7 Effective function in vector control with speed sensor (PG option is necessary.)
*8 Function not incorporated in the inverters of initial version

Terminal Arrangement

●Main circuit terminals

Inverter type		Refer to:
Three-phase 200V	Three-phase 400V	
FRN0.4G1S-2A	FRN0.4G1□-4A	Figure A
FRN0.75G1S-2A	FRN0.75G1□-4A	
FRN1.5G1S-2A	FRN1.5G1□-4A	Figure B
FRN2.2G1S-2A	FRN2.2G1□-4A	
FRN3.7G1S-2A	FRN3.7G1□-4A	
FRN5.5G1S-2A	FRN5.5G1□-4A	Figure C
FRN7.5G1S-2A	FRN7.5G1□-4A	
FRN11G1S-2A	FRN11G1□-4A	
FRN15G1S-2A	FRN15G1□-4A	Figure D
FRN18.5G1S-2A	FRN18.5G1□-4A	
FRN22G1S-2A	FRN22G1□-4A	
FRN30G1S-2A	FRN30G1□-4A	Figure E
	FRN37G1□-4A	
	FRN45G1□-4A	
	FRN55G1□-4A	
FRN37G1S-2A	FRN75G1□-4A	Figure F
FRN45G1S-2A		
FRN55G1S-2A		
—	FRN90G1□-4A	Figure G
—	FRN110G1□-4A	
FRN75G1S-2A	—	Figure M
—	FRN132G1□-4A	Figure H
—	FRN160G1□-4A	
FRN90G1S-2A	FRN200G1□-4A	Figure I
—	FRN220G1□-4A	
—	FRN280G1□-4A	Figure J
—	FRN315G1□-4A	
—	FRN355G1□-4A	Figure K
—	FRN400G1□-4A	
—	FRN500G1□-4A	Figure L
—	FRN630G1□-4A	

Note: A box (□) in the above table replaces S or E depending on the enclosure.

Figure A

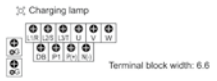

Figure B

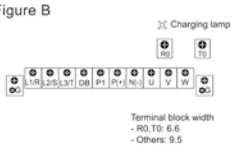

Figure C

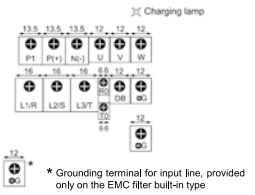

Figure D

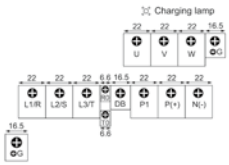

Figure E

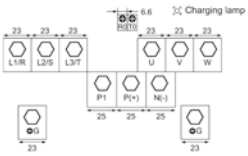

Figure F / Figure G

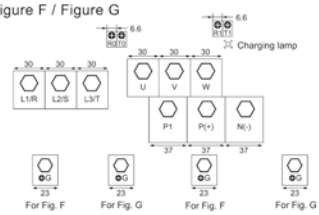

Figure H / Figure I

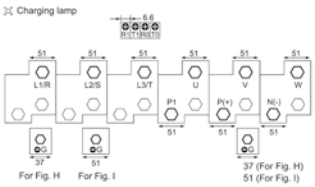

Figure J

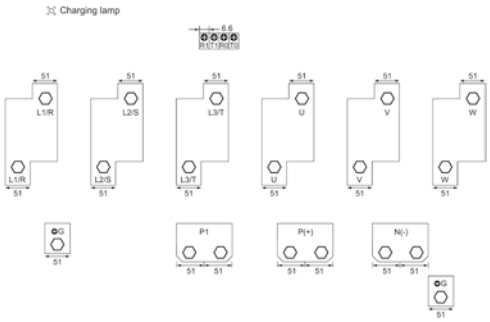

Figure K

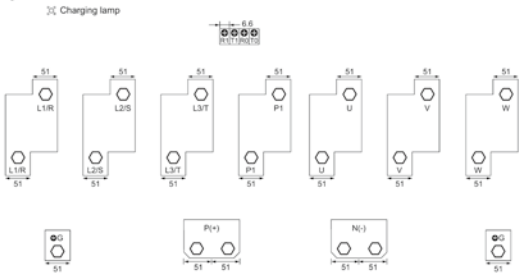

Figure M

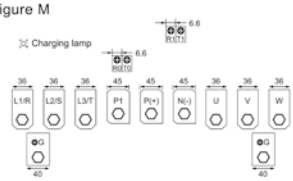

Figure L

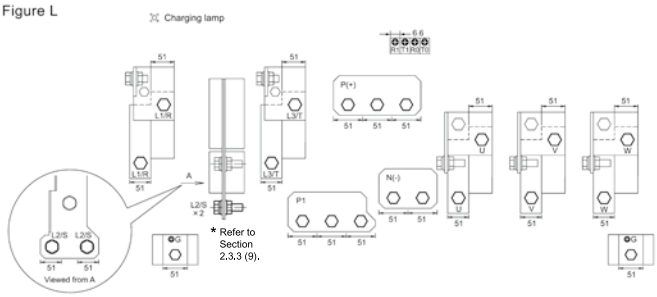

Function Settings

F codes: Fundamental Functions

Code	Name	Data setting range	Change when running	Data copying	Default setting	Drive control V/f	Drive control W/O PG	Drive control W/PG
F00	Data Protection	0 : Disable both data protection and digital reference protection 1 : Enable data protection and disable digital reference protection 2 : Disable data protection and enable digital reference protection 3 : Enable both data protection and digital reference protection	○	○	0	○	○	○
F01	Frequency Command 1	0 : ⌃ / ⌄ keys on keypad 1 : Voltage input to terminal [12] (-10 to +10 VDC) 2 : Current input to terminal [C1] (4 to 20 mA DC) 3 : Sum of voltage and current inputs to terminals [12] and [C1] 5 : Voltage input to terminal [V2] (0 to ±10 VDC) 7 : Terminal command UP/DOWN control 8 : ⌃ / ⌄ keys on keypad(balanceless-bumpless switching available) 10 : Pattern operation 11 : Digital input interface card (option) 12 : PG interface card	None	○	0	○	○	○
F02	Operation Method	0 : RUN/STOP keys on keypad (Motor rotational direction specified by terminal command FWD/REV) 1 : Terminal command *FWD* or *REV* 2 : RUN/STOP keys on keypad (forward) 3 : RUN/STOP keys on keypad (reverse)	None	○	2	○	○	○
F03	Maximum Frequency 1	25.0 to 500.0 Hz	None	○	*1	○	○	○
F04	Base Frequency 1	25.0 to 500.0 Hz	None	○	50.0	○	○	○
F05	Rated Voltage at Base Frequency 1	0 : Output a voltage in proportion to input voltage 80 to 240 V : Output an AVR-controlled voltage(for 200 V class series) 160 to 500 V : Output an AVR-controlled voltage(for 400 V class series)	None	△2	*1	○	○	○
F06	Maximum Output Voltage 1	80 to 240 V : Output an AVR-controlled voltage(for 200 V class series) 160 to 500 V : Output an AVR-controlled voltage(for 400 V class series)	None	△2	*1	○	None	None
F07	Acceleration Time 1	0.00 to 6000 s	○	○	*2	○	○	○
F08	Deceleration Time 1	Note: Entering 0.00 cancels the acceleration time, requiring external soft-start.	○	○	*2	○	○	○
F09	Torque Boost 1	0.0% to 20.0% (percentage with respect to "Rated Voltage at Base Frequency 1")	○	○	*3	○	None	None
F10	Electronic Thermal Overload Protection for Motor 1 (Select motor characteristics)	1 : For a general-purpose motor with shaft-driven cooling fan 2 : For an inverter-driven motor, non-ventilated motor, or motor with separately powered cooling fan	○	○	1	○	○	○
F11	(Overload detection level)	0.00: Disable 1% to 135% of the rated current (allowable continuous drive current) of the motor	○	△1△2	*4	○	○	○
F12	(Thermal time constant)	0.5 to 75.0 min	○	○	*5	○	○	○
F14	Restart Mode after Momentary Power Failure (Mode selection)	0 : Trip immediately 1 : Trip after a recovery from power failure 2 : Trip after decelerate-to-stop 3 : Continue to run, for heavy inertia or general loads 4 : Restart at the frequency at which the power failure occurred, for general loads 5 : Restart at the starting frequency	○	○	1	○	○	○
F15	Frequency Limiter (High)	0.0 to 500.0 Hz	○	○	70.0	○	○	○
F16	(Low)	0.0 to 500.0 Hz	○	○	0.0	○	○	○
F18	Bias (Frequency command 1)	-100.00% to 100.00%	◎	○	0.00	○	○	○
F20	DC Braking 1 (Braking starting frequency)	0.0 to 60.0 Hz	○	○	0.0	○	○	○
F21	(Braking level)	0% to 100% (HD mode), 0% to 80% (LD mode)	○	○	0	○	○	○
F22	(Braking time)	0.00 (Disable); 0.01 to 30.00 s	○	○	0.00	○	○	○
F23	Starting Frequency 1	0.0 to 60.0 Hz	○	○	0.5	○	○	○
F24	(Holding time)	0.00 to 10.00 s	○	○	0.00	○	○	○
F25	Stop Frequency	0.0 to 60.0 Hz	○	○	0.2	○	○	○
F26	Motor Sound (Carrier frequency)	0.75 to 16 kHz (HD-mode inverters with 0.4 to 55 kW, and LD-mode ones with 5.5 to 18.5 kW) 0.75 to 10 kHz (HD-mode inverters with 75 to 400 kW, and LD-mode ones with 22 to 55 kW) 0.75 to 6 kHz (HD-mode inverters with 500 / 630 kW, and LD-mode ones with 75 to 500 kW) 0.75 to 4 kHz (LD-mode inverters with 630 kW)	○	○	2 (Asia) 15 (EU)	○	○	○
F27	(Tone)	0 : Level 0 (Inactive) 1 : Level 1 2 : Level 2 3 : Level 3	○	○	0	○	None	None
F29 *6	Analog Output [FMA] / [FM1] (Mode selection)	0 : Output in voltage (0 to 10 VDC) 1 : Output in current (4 to 20 mA DC) 2 : Output in current (0 to 20 mA DC)	○	○	0	○	○	○
F30	(Voltage adjustment)	0% to 300%	◎	○	100	○	○	○
F31 *6	(Function)	Select a function to be monitored from the followings. 0 : Output frequency 1 (before slip compensation) 1 : Output frequency 2 (after slip compensation) 2 : Output current 3 : Output voltage 4 : Output torque 5 : Load factor 6 : Input power 7 : PID feedback amount 8 : PG feedback value 9 : DC link bus voltage 10 : Universal AO 13 : Motor output 14 : Calibration (+) 15 : PID command (SV) 16 : PID output (MV) 17 : Positional deviation in synchronous operation	○	○	0	○	○	○
F32	Analog Output [FM2] (Mode selection)	0: Output in voltage (0 to 10 VDC) 1: Output in current (4 to 20 mA DC) 2: Output in current (0 to 20 mA DC)	○	○	0	○	○	○
F34	(Voltage adjustment)	0% to 300%	◎	○	100	○	○	○

●F codes: Fundamental Functions

Code	Name	Data setting range	Change when running	Data copying	Default setting	Drive control V/f	W/O PG	W/PG
F35 *6	Analog Output [FM2] (Function)	Select a function to be monitored from the followings. 0 : Output frequency 1 (before slip compensation) 1 : Output frequency 2 (after slip compensation) 2 : Output current 3 : Output voltage 4 : Output torque 5 : Load factor 6 : Input power 7 : PID feedback amount 8 : PG feedback value 9 : DC link bus voltage 10 : Universal AO 13 : Motor output 14 : Calibration 15 : PID command (SV) 16 : PID output (MV) 17 : Positional deviation in synchronous operation	○	○	0	○	○	○
F37	Load Selection/ Auto Torque Boost/ Auto Energy Saving Operation 1	0 : Variable torque load 1 : Constant torque load 2 : Auto torque boost 3 : Auto energy saving(Variable torque load during ACC/DEC) 4 : Auto energy saving(Constant torque load during ACC/DEC) 5 : Auto energy saving(Auto torque boost during ACC/DEC)	None	○	1	○	None	○
F38	Stop Frequency(Detection mode)	0 : Detected speed 1 : Commanded speed	None	○	0	None	None	○
F39	(Holding Time)	0.00 to 10.00 s	○	○	0.00	○	○	○
F40	Torque Limiter 1-1	-300% to 300%; 999 (Disable)	○	○	999	○	○	○
F41	1-2	-300% to 300%; 999 (Disable)	○	○	999	○	○	○
F42	Drive Control Selection 1	0 : V/f control with slip compensation inactive 1 : Dynamic torque vector control 2 : V/f control with slip compensation active 5 : Vector control without speed sensor 6 : Vector control with speed sensor	None	○	0	○	○	○
F43	Current Limiter (Mode selection)	0 : Disable (No current limiter works.) 1 : Enable at constant speed (Disable during ACC/DEC) 2 : Enable during ACC/constant speed operation	○	○	2	○	None	None
F44	(Level)	20% to 200% (The data is interpreted as the rated output current of the inverter for 100%.)	○	○	160	○	None	None
F50	Electronic Thermal Overload Protection for Braking Resistor (Discharging capability)	0 (Braking resistor built-in type), 1 to 9000 kWs, OFF (Disable)	○	△1△2	6	○	○	○
F51	(Allowable average loss)	0.001 to 99.99 kW	○	△1△2	0.001	○	○	○
F52	(Resistance)	0.01 to 999Ω	○	△1△2	0.01	○	○	○
F80	Switching between HD, MD and LD drive modes	0 : HD (High Duty) mode 1 : LD (Low Duty) mode 2 : MD (Medium Duty) mode	None	○	0	○	○	○

●E codes: Extension Terminal Functions

Code	Name	Data setting range	Change when running	Data copying	Default setting	Drive control V/f	W/O PG	W/PG
E01	Terminal [X1] Function	Selecting function code data assigns the corresponding function to	None	○	0			
E02	Terminal [X2] Function	terminals [X1] to [X7] as listed below.	None	○	1			
E03	Terminal [X3] Function	0 (1000) : Select multi-frequency (0 to 1 steps) (SS1)	None	○	2	○	○	○
E04	Terminal [X4] Function	1 (1001) : Select multi-frequency (0 to 3 steps) (SS2)	None	○	3	○	○	○
E05	Terminal [X5] Function	2 (1002) : Select multi-frequency (0 to 7 steps) (SS4)	None	○	4	○	○	○
E06	Terminal [X6] Function	3 (1003) : Select multi-frequency (0 to 15 steps) (SS8)	None	○	5	○	○	○
E07	Terminal [X7] Function	4 (1004) : Select ACC/DEC time (2 steps) (RT1)	None	○	*8	○	○	○
E08	Terminal [X8] Function *7	5 (1005) : Select ACC/DEC time (4 steps) (RT2)	None	○	7	○	○	○
E09	Terminal [X9] Function *7	6 (1006) : Enable 3-wire operation (HLD)	None	○	8	○	○	○
		7 (1007) : Coast to a stop (BX)				○	○	○
		8 (1008) : Reset alarm (RST)				○	○	○
		9 (1009) : Enable external alarm trip (9 = Active OFF, 1009 = Active ON) (THR)				○	○	○
		10 (1010) : Ready for jogging (JOG)				○	○	○
		11 (1011) : Select frequency command 2/1 (Hz2/Hz1)				○	○	○
		12 (1012) : Select motor 2 (M2)				○	○	○
		13 : Enable DC braking (DCBRK)				○	○	○
		14 (1014) : Select torque limiter level 2/1 (TL2/TL1)				○	○	○
		15 : Switch to commercial power (50 Hz) (SW50)				○	None	None
		16 : Switch to commercial power (60 Hz) (SW60)				○	None	None
		17 (1017) : UP (Increase output frequency) (UP)				○	○	○
		18 (1018) : DOWN (Decrease output frequency) (DOWN)				○	○	○
		19 (1019) : Enable data change with keypad (WE-KP)				○	○	○
		20 (1020) : Cancel PID control (Hz/PID)				○	○	○
		21 (1021) : Switch normal/inverse operation (IVS)				○	○	○

The shaded function codes ( ) are applicable to the quick setup.
*1 The factory default differs depending upon the shipping destination.
*2 6.00 s for inverters with a capacity of 22 kW or below; 20.00 s for those with 30 kW or above.
*3 The factory default differs depending upon the inverter's capacity.
*4 The motor rated current is automatically set.
*5 5.0 min for inverters with a capacity of 22 kW or below; 10.0 min for those with 30 kW or above.
*6 [FM1] and [FM2] for Asia (FRN_ _ _G1■-□A) and EU (FRN_ _ _G1■-□E) versions.
*7 Terminals [X8] and [X9] not provided on Asia (FRN_ _ _G1■-□A) and EU (FRN_ _ _G1■-□E) versions.
*8 "8" for Asia (FRN_ _ _G1■-□A) and EU (FRN_ _ _G1■-□E) versions; "6" for other versions.
*10 0 for inverters with a capacity of 7.5 kW or below; OFF for those with 0.11 kW or above.
<Data change, reflection and strage>
None : Not available ○ : After changing data with using ∧∨ keys, execute and save data by pressing key,
◎ After changing and executing data with using ∧∨ keys, save the data by pressing key.

Data copy

○	Data copy is enabled.
△1	Data copy is not enabled if the inverter capacities vary.
△2	Data copy is not enabled if the voltage classes vary.
None	Data copy is not enabled.

Function Settings

E codes: Extension Terminal Functions

Code	Name	Data setting range	Change when running	Data copying	Default setting	Drive control V/f	Drive control W/OPG	Drive control W/PG
E01	Terminal [X1] Function	22 (1022) : Interlock (IL)				○	○	○
E02	Terminal [X2] Function	24 (1024) : Enable communications link via RS-485 or fieldbus (option) (LE)				○	○	○
E03	Terminal [X3] Function	25 (1025) : Universal DI (U-DI)				○	○	○
E04	Terminal [X4] Function	26 (1026) : Enable auto search for idling motor speed at starting (STM)	None	○	8	○	None	None
E05	Terminal [X5] Function	30 (1030) : Force to stop (30 = Active OFF, 1030 = Active ON) (STOP)				○	○	○
E06	Terminal [X6] Function	32 (1032) : Pre-excitation (EXITE)				None	○	○
E07	Terminal [X7] Function	33 (1033) : Reset PID integral and differential components (PID-RST)				○	○	○
E08	Terminal [X8] Function *7	34 (1034) : Hold PID integral component (PID-HLD)				○	○	○
E09	Terminal [X9] Function *7	35 (1035) : Select local (keypad) operation (LOC)				○	○	○
		36 (1036) : Select motor 3 (M3)				○	○	○
		37 (1037) : Select motor 4 (M4)				○	○	○
		39 : Protect motor from dew condensation (DWP)				○	○	○
		40 : Enable integrated sequence to switch to commercial power (50 Hz) (ISW50)				○	None	None
		41 : Enable integrated sequence to switch to commercial power (60 Hz) (ISW60)				○	None	None
		47 (1047) : Servo-lock command (LOCK)				None	None	○
		48 : Pulse train input (available only on terminal [X7] (E07)) (PIN)				○	○	○
		49 (1049) : Pulse train sign (available on terminals except [X7] (E01 to E06)) (SIGN)				○	○	○
		59 (1059) : Enable battery operation (BATRY)				○	○	○
		72 (1072) : Count the run time of commercial power-driven motor 1 (CRUN-M1)				○	None	None
		73 (1073) : Count the run time of commercial power-driven motor 2 (CRUN-M2)				○	None	None
		74 (1074) : Count the run time of commercial power-driven motor 3 (CRUN-M3)				○	None	None
		75 (1075) : Count the run time of commercial power-driven motor 4 (CRUN-M4)				○	None	None
		76 (1076) : Select droop control (DROOP)				○	○	○
		77 (1077) : Cancel PG alarm (PG-CCL)				None	None	○
		Setting the value of 1000s in parentheses ( ) shown above assigns a negative logic input to a terminal.						
		80 (1080) : Cancel customizable logic (CLC)				○	○	○
		81 (1081) : Clear all customizable logic timers (CLTC)				○	○	○
		100(1110) : No function assigned (NONE)				○	○	○
		110(1110) : Servo lock gain selection (SLG2)				None	None	○
		111(1111) : Force to stop only by terminal (STOP-T) (111 = Active OFF, 1111 = Active ON)				○	○	○
E10	Acceleration Time 2	0.00 to 6000 s	○	○	*2	○	○	○
E11	Deceleration Time 2	Note: Entering 0.00 cancels the acceleration time, requiring external soft-start and -stop.	○	○	*2	○	○	○
E12	Acceleration Time 3		○	○	*2	○	○	○
E13	Deceleration Time 3		○	○	*2	○	○	○
E14	Acceleration Time 4		○	○	*2	○	○	○
E15	Deceleration Time 4		○	○	*2	○	○	○
E16	Torque Limiter 2-1	-300% to 300%; 999 (Disable)	○	○	999	○	○	○
E17	Torque Limiter 2-2	-300% to 300%; 999 (Disable)	○	○	999	○	○	○
E20	Terminal [Y1] Function	Selecting function code data assigns the corresponding function to	None	○	0			
E21	Terminal [Y2] Function	terminals [Y1] to [Y5A/C] and [30A/B/C] as listed below.	None	○	1			
E22	Terminal [Y3] Function	0 (1000) : Inverter running (RUN)	None	○	2	○	○	○
E23	Terminal [Y4] Function	1 (1001) : Frequency (speed) arrival signal (FAR)	None	○	7	○	○	○
E24	Terminal [Y5A/C] Function	2 (1002) : Frequency (speed) detected (FDT)	None	○	15	○	○	○
E27	Terminal [30A/B/C] Function (Relay output)	3 (1003) : Undervoltage detected (Inverter stopped) (LU)	None	○	99	○	○	○
		4 (1004) : Torque polarity detected (B/D)				○	○	○
		5 (1005) : Inverter output limiting (IOL)				○	○	○
		6 (1006) : Auto-restarting after momentary power failure (IPF)				○	○	○
		7 (1007) : Motor overload early warning (OL)				○	○	○
		8 (1008) : Keypad operation enabled (KP)				○	○	○
		10 (1010) : Inverter ready to run (RDY)				○	○	○
		11 : Switch motor drive source between commercial power and inverter output (For MC on commercial line) (SW88)				○	None	None
		12 : Switch motor drive source between commercial power and inverter output (For secondary side) (SW52-2)				○	None	None
		13 : Switch motor drive source between commercial power and inverter output (For primary side) (SW52-1)				○	None	None
		15 (1015) : Select AX terminal function (For MC on primary side) (AX)				○	None	None
		16 (1016) : Stage transition signal for pattern operation (TU)			0	○	○	○
		17 (1017) : Cycle completion signal for pattern operation (TO)			1	○	○	○
		18 (1018) : Pattern operation stage 1 (STG1)			2	○	○	○
		19 (1019) : Pattern operation stage 2 (SRG2)			7	○	○	○
		20 (1020) : Pattern operation stage 4 (STG4)			15	○	○	○
		22 (1022) : Inverter output limiting with delay (IOL2)				○	○	○
		25 (1025) : Cooling fan in operation (FAN)				○	○	○
		26 (1026) : Auto-resetting (TRY)				○	○	○
		27 (1027) : Universal DO (U-DO)				○	○	○
		28 (1028) : Heat sink overheat early warning (OH)				○	○	○
		29 (1029) : Synchronization completed (SY)			99	None	None	○
		30 (1030) : Lifetime alarm (LIFE)				○	○	○
		31 (1031) : Frequency (speed) detected 2 (FDT2)				○	○	○
		33 (1033) : Reference loss detected (REF OFF)				○	○	○
		35 (1035) : Inverter output on (RUN2)				○	○	○
		36 (1036) : Overload prevention control (OLP)				○	○	○
		37 (1037) : Current detected (ID)				○	○	○
		38 (1038) : Current detected 2 (ID2)				○	○	○
		39 (1039) : Current detected 3 (ID3)				○	○	○
		41 (1041) : Low current detected (IDL)				○	○	○
		42 (1042) : PID alarm (PID-ALM)				○	○	○
		43 (1043) : Under PID control (PID-CTL)				○	○	○
		44 (1044) : Motor stopped due to slow flowrate under PID control (PID-STP)				○	○	○
		45 (1045) : Low output torque detected (U-TL)				○	○	○
		46 (1046) : Torque detected 1 (TD1)				○	○	○
		47 (1047) : Torque detected 2 (TD2)				○	○	○
		48 (1048) : Motor 1 selected (SWM1)				○	○	○
		49 (1049) : Motor 2 selected (SWM2)				○	○	○

●E codes: Extension Terminal Functions

Code	Name	Data setting range	Change when running	Data copying	Default setting	Drive control V/f	W/O PG	W/PG
E27	Terminal [30A/B/C] Function (Relay output)	50 (1050) : Motor 3 selected (SWM3)	None	○	99	○	○	○
		51 (1051) : Motor 4 selected (SWM4)				○	○	○
		52 (1052) : Running forward (FRUN)				○	○	○
		53 (1053) : Running reverse (RRUN)				○	○	○
		54 (1054) : In remote operation (RMT)				○	○	○
		56 (1056) : Motor overheat detected by thermistor (THM)				○	○	○
		57 (1057) : Brake signal (BRKS)				○	○	○
		58 (1058) : Frequency (speed) detected 3 (FDT3)				○	○	○
		59 (1059) : Terminal [C1] wire break (C1OFF)				○	○	○
		70 (1070) : Speed valid (DNZS)				None	○	○
		71 (1071) : Speed agreement (DSAG)				None	○	○
		72 (1072) : Frequency (speed) arrival signal 3 (FAR3)				○	○	○
		76 (1076) : PG error detected (PG-ERR)				None	○	○
		77 (1077) : Low DC link bus voltage (U-EDC)				○	○	○
		79 (1079) : Deceleration in momentary power failure (IPF2)				○	○	○
		82 (1082) : Positioning completion signal (PSET)				None	None	○
		84 (1084) : Maintenance timer (MNT)				○	○	○
		90 (1090) : Alarm indication 1 (AL1)				○	○	○
		91 (1091) : Alarm indication 2 (AL2)				○	○	○
		92 (1092) : Alarm indication 4 (AL4)				○	○	○
		93 (1093) : Alarm indication 8 (AL8)				○	○	○
		98 (1098) : Light alarm (L-ALM)				○	○	○
		99 (1099) : Alarm output (for any alarm) (ALM)				○	○	○
		101 (1101): Enable circuit failure detected (DECF)				○	○	○
		102 (1102): Enable input OFF (EN OFF)				○	○	○
		105 (1105): Braking transistor broken (DBAL)				○	○	○
		111 (1111): Customaizable logic output signal 1 (CL01)				○	○	○
		112 (1112): Customaizable logic output signal 2 (CL02)				○	○	○
		113 (1113): Customaizable logic output signal 3 (CL03)				○	○	○
		114 (1114): Customaizable logic output signal 4 (CL04)				○	○	○
		115 (1115): Customaizable logic output signal 5 (CL05)				○	○	○
		Setting the value of 1000s in parentheses ( ) shown above assigns a negative logic input to a terminal.						
E30	Frequency Arrival (Detection width)	0.0 to 10.0 Hz	○	○	2.5	○	○	○
E31	Frequency Detection 1(Level)	0.0 to 500.0 Hz	○	○	*1	○	○	○
E32	(Hysteresis width)	0.0 to 500.0 Hz	○	○	1.0	○	○	○
E34	Overload Early Warning/(Level)	0.00 (Disable); Current value of 1% to 200% of the inverter rated current	○	△1△2	*4	○	○	○
E35	Current Detection (Timer)	0.01 to 600.00s	○	○	10.00	○	○	○
E36	Frequency Detection 2 (Level)	0.0 to 500.0Hz	○	○	*1	○	○	○
E37	Current Detection 2/ (Level)	0.00 (Disable); Current value of 1% to 200% of the inverter rated current	○	△1△2	*4	○	○	○
E38	Low Current Detection (Timer)	0.01 to 600.00 s	○	○	10.00	○	○	○
E40	PID Display Coefficient A	-999 to 0.00 to 9990	○	○	100	○	○	○
E41	PID Display Coefficient B	-999 to 0.00 to 9990	○	○	0.00	○	○	○
E42	LED Display Filter	0.0 to 5.0 s	○	○	0.5	○	○	○
E43	LED Monitor (Item selection)	0 : Speed monitor (select by E48) 3 : Output current 4 : Output voltage 8 : Calculated torque 9 : Input power 10 : PID command 12 : PID feedback amount 14 : PID output 15 : Load factor 16 : Motor output 17 : Analog input 23 : Torque current (%) 24 : Magnetic flux command (%) 25 : Input watt-hour	○	○	0	○	○	○
E44	(Display when stopped)	0 : Specified value 1 : Output value	○	○	0	○	○	○
E45	LCD Monitor (Item selection)	0 : Running status, rotational direction and operation guide 1 : Bar charts for output frequency, current and calculated torque	○	○	0	○	○	○
E46	(Language selection)	Multi-function keypad (option) Type: TP-G1-J1 0 : Japanese 1 : English 2 : German 3 : French 4 : Spanish 5 : Italian	○	○	1	○	○	○
E47	(Contrast control)	0 (Low) to 10 (High)	○	○	5	○	○	○
E48	LED Monitor (Speed monitor item)	0 : Output frequency (Before slip compensation) 1 : Output frequency (After slip compensation) 2 : Reference frequency 3 : Motor speed in r/min 4 : Load shaft speed in r/min 5 : Line speed in m/min 7 : Display speed in %	○	○	0	○	○	○

The shaded function codes ( ) are applicable to the quick setup.
*1 The factory default differs depending upon the shipping destination.
*2 6.00 s for inverters with a capacity of 22 kW or below; 20.00 s for those with 30 kW or above.
*4 The motor rated current is automatically set.
*7 Terminals [X8] and [X9] not provided on Asia (FRN_ _ _G1■-□A) and EU (FRN_ _ _G1■-□E) versions.
<Data change, reflection and strage>
None: Not available ○: After changing data with using ⌃⌄ keys, execute and save data by pressing key,
◎ After changing and executing data with using ⌃⌄ keys, save the data by pressing key.

Data copy

○	Data copy is enabled.
△1	Data copy is not enabled if the inverter capacities vary.
△2	Data copy is not enabled if the voltage classes vary.
None	Data copy is not enabled.

Function Settings

E codes: Extension Terminal Functions

Code	Name	Data setting range	Change when running	Data copying	Default setting	Drive control V/f	Drive control W/O PG	Drive control W/PG
E49	Torque monitor (Polarity)	0 : Torque polarity 1 : + for driving, - for braking	○	○	1	○	○	○
E50	Coefficient for Speed Indication	0.01 to 200.00	○	○	30.00	○	○	○
E51	Display Coefficient for Input Watt-hour Data	0.000 (Cancel/reset), 0.001 to 9999	○	○	0.010	○	○	○
E52	Keypad (Menu display mode)	0 : Function code data editing mode (Menu #0, #1, and #7) 1 : Function code data check mode (Menu #2 and #7) 2 : Full-menu mode	○	○	0	○	○	○
E54	Frequency Detection 3(Level)	0.0 to 500.0 Hz	○	○	*1	○	○	○
E55	Current Detection 3(Level)	0.00 (Disable); Current value of 1% to 200% of the inverter rated current	○	1△2△	*4	○	○	○
E56	(Timer)	0.01 to 600.00 s	○	○	10.00	○	○	○
E61	Terminal [12] Extended Function	0 : None	None	○	0	○	○	○
E62	Terminal [C1] Extended Function	1 : Auxiliary frequency command 1	None	○	0	○	○	○
E63	Terminal [V2] Extended Function	2 : Auxiliary frequency command 2 3 : PID command 1 5 : PID feedback amount 6 : Ratio setting 7 : Analog torque limit value A 8 : Analog torque limit value B 10 : Torque command 11 : Torque current command 17 : Forward (FWD) side speed limit value 17 : Speed limit FWD 18 : Speed limit REV 20 : Analog input monitor	None	○	0	○	○	○
E64	Saving of Digital Reference Frequency	0 : Automatic saving (when main power is turned OFF) 1 : Saving by pressing (PROG/STORE) key	○	○	1	○	○	○
E65	Reference Loss Detection (Continuous running frequency)	0 : Decelerate to stop, 20% to 120%, 999: Disable	○	○	999	○	○	○
E76	DC link bus voltage detection level	200 to 400V: 200Vclass series 400 to 800V: 400Vclass series	○	○	*9	○	○	○
E78	Torque Detection 1 (Level)	0% to 300%	○	○	100	○	○	○
E79	(Timer)	0.01 to 600.00 s	○	○	10.00	○	○	○
E80	Torque Detection 2/(Level)	0% to 300%	○	○	20	○	○	○
E81	Low Torque Detection(Timer)	0.01 to 600.00 s	○	○	20.00	○	○	○
E98	Terminal [FWD] Function	Selecting function code data assigns the corresponding function to terminals [FWD] and [REV] as listed below.	None	○	98			
E99	Terminal [REV] Function	0 (1000): Select multi-frequency (0 to 1 steps) (SS1)				○	○	○
		1 (1001): Select multi-frequency (0 to 3 steps) (SS2)	None	○	99	○	○	○
		2 (1002): Select multi-frequency (0 to 7 steps) (SS4)				○	○	○
		3 (1003): Select multi-frequency (0 to 15 steps) (SS8)				○	○	○
		4 (1004): Select ACC/DEC time (2 steps) (RT1)				○	○	○
		5 (1005): Select ACC/DEC time (4 steps) (RT2)				○	○	○
		6 (1006): Enable 3-wire operation (HLD)				○	○	○
		7 (1007): Coast to a stop (BX)				○	○	○
		8 (1008): Reset alarm (RST)				○	○	○
		9 (1009): Enable external alarm trip(9 = Active OFF, 1009 = Active ON) (THR)				○	○	○
		10 (1010): Ready for jogging (JOG)				○	○	○
		11 (1011): Select frequency command 2/1 (Hz2/Hz1)				○	○	○
		12 (1012): Select motor 2 (M2)				○	○	○
		13 : Enable DC braking (DCBRK)				○	○	○
		14 (1014): Select torque limiter level 2/1 (TL2/TL1)				○	○	○
		15 : Switch to commercial power (50 Hz) (SW50)				○	None	None
		16 : Switch to commercial power (60 Hz) (SW60)				○	None	None
		17 (1017): UP (Increase output frequency) (UP)				○	○	○
		18 (1018): DOWN (Decrease output frequency) (DOWN)				○	○	○
		19 (1019): Enable data change with keypad (WE-KP)				○	○	○
		20 (1020): Cancel PID control (Hz/PID)				○	○	○
		21 (1021): Switch normal/inverse operation (IVS)				○	○	○
		22 (1022): Interlock (IL)				○	○	○
		24 (1024): Enable communications link via RS-485 or fieldbus (LE)				○	○	○
		25 (1025): Universal DI (U-DI)				○	○	○
		26 (1026): Enable auto search for idling motor speed at starting (STM)				○	None	None
		30 (1030): Force to stop (30 = Active OFF, 1030 = Active ON) (STOP)				○	○	○
		32 (1032): Pre-excitation (EXITE)				None	○	○
		33 (1033): Reset PID integral and differential components (PID-RST)				○	○	○
		34 (1034): Hold PID integral component (PID-HLD)				○	○	○
		35 (1035): Select local (keypad) operation (LOC)				○	○	○
		36 (1036): Select motor 3 (M3)				○	○	○
		37 (1037): Select motor 4 (M4)				○	○	○
		39 : Protect motor from dew condensation (DWP)				○	○	○
		40 : Enable integrated sequence to switch to commercial power (50 Hz) (ISW50)				○	None	None
		41 : Enable integrated sequence to switch to commercial power (60 Hz) (ISW60)				○	None	None
		47 (1047): Servo-lock command (LOCK)				None	None	○
		49 (1049): Pulse train sign (SIGN)				○	○	○
		59 (1059): Enable battery operation (BATRY)				○	○	○
		72 (1072): Count the run time of commercial power-driven motor 1 (CRUN-M1)				○	None	None
		73 (1073): Count the run time of commercial power-driven motor 2 (CRUN-M2)				○	None	None
		74 (1074): Count the run time of commercial power-driven motor 3 (CRUN-M3)				○	None	None
		75 (1075): Count the run time of commercial power-driven motor 4 (CRUN-M4)				○	None	None
		76 (1076): Select droop control (DROOP)				○	○	○
		77 (1077): Cancel PG alarm (PG-CCL)				None	None	○
		80 (1080): Cancel customizable logic timers (CLC)						
		81 (1081): Clear all customizable logic timers (CLTC)						
		98 : Run forward (FWD)				○	○	○
		99 : Run reverse (REV)				○	○	○
		Setting the value of 1000s in parentheses ( ) shown above assigns a negative logic input to a terminal.						
		110(1110) : Servo lock gain selection (SLG2)				None	None	○
		111(1111) : Force to stop only by terminal (STOP-T) (111 = Active OFF, 1111 = Active ON)				○	○	○

●C codes: Control Functions of Frequency

Code	Name	Data setting range	Change when running	Data copying	Default setting	Drive control V/f	W/O PG	W/PG
C01	Jump Frequency 1	0.0 to 500.0 Hz	○	○	0.0	○	○	○
C02	2		○	○	0.0	○	○	○
C03	3		○	○	0.0	○	○	○
C04	(Hysteresis width)	0.0 to 30.0 Hz	○	○	3.0	○	○	○
C05	Multi-frequency 1	0.00 to 500.00 Hz	○	○	0.00	○	○	○
C06	2		○	○	0.00	○	○	○
C07	3		○	○	0.00	○	○	○
C08	4		○	○	0.00	○	○	○
C09	5		○	○	0.00	○	○	○
C10	6		○	○	0.00	○	○	○
C11	7		○	○	0.00	○	○	○
C12	8		○	○	0.00	○	○	○
C13	9		○	○	0.00	○	○	○
C14	10		○	○	0.00	○	○	○
C15	11		○	○	0.00	○	○	○
C16	12		○	○	0.00	○	○	○
C17	13		○	○	0.00	○	○	○
C18	14		○	○	0.00	○	○	○
C19	15		○	○	0.00	○	○	○
C20	Jogging Frequency	0.00 to 500.00 Hz	○	○	0.00	○	○	○
C21	Pattern Operation Mode	0: Execute a single cycle of pattern operation 1: Execute a cycle of pattern operation repeatedly 2: Execute a single cycle of pattern operation and run at constant speed	None	○	0	○	○	○
C22	Stage 1 Running Time	0.00 to 6000 s	○	○	0.00	○	○	○
C23	Stage 2 Running Time		○	○	0.00	○	○	○
C24	Stage 3 Running Time		○	○	0.00	○	○	○
C25	Stage 4 Running Time		○	○	0.00	○	○	○
C26	Stage 5 Running Time		○	○	0.00	○	○	○
C27	Stage 6 Running Time		○	○	0.00	○	○	○
C28	Stage 7 Running Time		○	○	0.00	○	○	○
C30	Frequency Command 2	0 : Enable ⌃ / ⌄ keys on the keypad 1 : Analog voltage input to terminal [12] (-10 to +10 VDC) 2 : Analog current input to terminal [C1] (4 to 20 mA DC) 3 : Analog sum of voltage and current inputs to terminals [12] and [C1] 5 : Analog voltage input to terminal [V2] (0 to 10 VDC) 7 : Terminal command UP/DOWN control 8 : Enable ⌃ / ⌄ keys on the keypad (balanceless-bumpless switching available) 10 : Pattern operation 11 : Digital input interface card (option) 12 : PG interface card	None	○	2	○	○	○
C31	Analog Input Adjustment for [12] (Offset)	-5.0% to 5.0%	◎	○	0.0	○	○	○
C32	(Gain)	0.00% to 200.00%	◎	○	100.0	○	○	○
C33	(Filter time constant)	0.00 to 5.00 s	○	○	0.05	○	○	○
C34	(Gain base point)	0.00% to 100.00%	◎	○	100.00	○	○	○
C35	(Polarity)	0 : Bipolar 1 : Unipolar	None	○	1	○	○	○
C36	Analog Input Adjustment for [C1] (Offset)	-5.0% to 5.0%	◎	○	0.0	○	○	○
C37	(Gain)	0.00% to 200.00%	◎	○	100.00	○	○	○
C38	(Filter time constant)	0.00 to 5.00s	○	○	0.05	○	○	○
C39	(Gain base point)	0.00% to 100.00%	◎	○	100.00	○	○	○
C40	Terminal [C1] Range Selection	0 : 4 to 20 mA 1 : 0 to 20 mA	None	○	0	○	○	○
C41	Analog Input Adjustment for [V2] (Offset)	-5.0% to 5.0%	◎	○	0.0	○	○	○
C42	(Gain)	0.00% to 200.00%	◎	○	100.00	○	○	○
C43	(Filter time constant)	0.00 to 5.00 s	○	○	0.05	○	○	○
C44	(Gain base point)	0.00% to 100.00%	◎	○	100.00	○	○	○
C45	(Polarity)	0 : Bipolar 1 : Unipolar	None	○	1	○	○	○
C50	Bias(Frequency command 1)(Bias base point)	0.00% to 100.00%	◎	○	0.00	○	○	○
C51	Bias(PID command 1)(Bias value)	-100.00% to 100.00%	◎	○	0.00	○	○	○
C52	(Bias base point)	0.00% to 100.00%	◎	○	0.00	○	○	○
C53	Selection of Normal/Inverse Operation (Frequency command 1)	0 : Normal operation 1 : Inverse operation	○	○	0	○	○	○
C82	Stage 1 Rotation Direction & Acceleration/Deceleration Time	1 : Forward Acceleration Time 1 (F07)/Deceleration Time 1 (F08)	○	○	1	○	○	○
C83	Stage 2 Rotation Direction & Acceleration/Deceleration Time	2 : Forward Acceleration Time 2 (E10)/Deceleration Time 2 (E11)	○	○	1	○	○	○
C84	Stage 3 Rotation Direction & Acceleration/Deceleration Time	3 : Forward Acceleration Time 3 (E12)/Deceleration Time 3 (E13)	○	○	1	○	○	○
C85	Stage 4 Rotation Direction & Acceleration/Deceleration Time	4 : Forward Acceleration Time 4 (E14)/Deceleration Time 4 (E15)	○	○	1	○	○	○
C86	Stage 5 Rotation Direction & Acceleration/Deceleration Time	11 : Reverse Acceleration Time 1 (F07)/Deceleration Time 1 (F08)	○	○	1	○	○	○
C87	Stage 6 Rotation Direction & Acceleration/Deceleration Time	12 : Reverse Acceleration Time 2 (E10)/Deceleration Time 2 (E11)	○	○	1	○	○	○
C88	Stage 7 Rotation Direction & Acceleration/Deceleration Time	13 : Reverse Acceleration Time 3 (E12)/Deceleration Time 3 (E13) 14 : Reverse Acceleration Time 4 (E14)/Deceleration Time 4 (E15)	○	○	1	○	○	○

The shaded function codes ( ) are applicable to the quick setup.
*1 The factory default differs depending upon the shipping destination.
*4 The motor rated current is automatically set.
*9 235V for 200V class series of inverters; 470V for 400V class series of inverters

<Data change, reflection and strage>
None : Not available ○ : After changing data with using ⌃⌄ keys, execute and save data by pressing key,
◎ After changing and executing data with using ⌃⌄ keys, save the data by pressing key.

Data copy

○	Data copy is enabled.
△1	Data copy is not enabled if the inverter capacities vary.
△2	Data copy is not enabled if the voltage classes vary.
None	Data copy is not enabled.

●P codes: Motor 1 Parameters

Code	Name	Data setting range	Change when running	Data copying	Default setting	Drive control V/f	W/O PG	W/PG
P01	Motor 1 (No. of poles)	2 to 22 poles	None	△1△2	4	○	○	○
P02	(Rated capacity)	0.01 to 1000 kW (when P99 = 0, 2, 3 or 4) 0.01 to 1000 HP (when P99 = 1)	None	△1△2	*11	○	○	○
P03	(Rated current)	0.00 to 2000 A	None	△1△2	*11	○	○	○
P04	(Auto-tuning)	0 : Disable 1 : Tune while the motor stops. (%R1, %X and rated slip frequency) 2 : Tune while the motor is rotating under V/f control(%R1, %X, rated slip frequency, no-load current, magnetic saturation factors 1 to 5, and magnetic saturation extension factors "a" to "c") 3 : Tune while the motor is rotating under vector control(%R1, %X, rated slip frequency, no-load current,magnetic saturation factors 1 to 5, and magnetic saturation extension factors "a" to "c." Available when the vector control is enabled.)	None	None	0	○	○	○
P05	(Online tuning)	0 : Disable 1 : Enable	○	○	0	○	None	None
P06	(No-load current)	0.00 to 2000 A	None	△1△2	*11	○	○	○
P07	(%R1)	0.00% to 50.00%	○	△1△2	*11	○	○	○
P08	(%X)	0.00% to 50.00%	○	△1△2	*11	○	○	○
P09	(Slip compensation gain for driving)	0.0% to 200.0%	◎	○	100.0	○	○	○
P10	(Slip compensation response time)	0.01 to 10.00 s	○	△1△2	0.12	○	None	None
P11	(Slip compensation gain for braking)	0.0% to 200.0%	◎	○	100.0	○	○	○
P12	(Rated slip frequency)	0.00 to 15.00 Hz	None	△1△2	*11	○	○	○
P13	(Iron loss factor 1)	0.00% to 20.00%	○	△1△2	*11	○	○	○
P14	(Iron loss factor 2)	0.00% to 20.00%	○	△1△2	0.00	○	○	○
P15	(Iron loss factor 3)	0.00% to 20.00%	○	△1△2	0.00	○	○	○
P16	(Magnetic saturation factor 1)	0.0% to 300.0%	○	△1△2	*11	○	○	○
P17	(Magnetic saturation factor 2)	0.0% to 300.0%	○	△1△2	*11	○	○	○
P18	(Magnetic saturation factor 3)	0.0% to 300.0%	○	△1△2	*11	○	○	○
P19	(Magnetic saturation factor 4)	0.0% to 300.0%	○	△1△2	*11	○	○	○
P20	(Magnetic saturation factor 5)	0.0% to 300.0%	○	△1△2	*11	○	○	○
P21	(Magnetic saturation extension factor "a")	0.0% to 300.0%	○	△1△2	*11	○	○	○
P22	(Magnetic saturation extension factor "b")	0.0% to 300.0%	○	△1△2	*11	○	○	○
P23	(Magnetic saturation extension factor "c")	0.0% to 300.0%	○	△1△2	*11	○	○	○
P53	(%X correction factor 1)	0% to 300%	○	△1△2	100	○	○	○
P54	(%X correction factor 2)	0% to 300%	○	△1△2	100	○	○	○
P55	(Torque current under vector control)	0.00 to 2000 A	None	△1△2	*11	None	○	○
P56	(Induced voltage factor under vector control)	50% to 100%	None	△1△2	85	None	○	○
P57	Reserved *13	0.000 to 20.000 s	○	△1△2	0.082	—	—	—
P99	Motor 1 Selection	0 : Motor characteristics 0 (Fuji standard motors, 8-series) 1 : Motor characteristics 1 (HP rating motors) 2 : Motor characteristics 2 (Fuji motors exclusively designed for vector control) 3 : Motor characteristics 3 (Fuji standard motors, 6-series) 4 : Other motors	None	△1△2	0	○	○	○

●H codes: High Performance Functions

Code	Name	Data setting range	Change when running	Data copying	Default setting	Drive control V/f	W/O PG	W/PG
H03	Data Initialization	0 : Disable initialization 1 : Initialize all function code data to the factory defaults 2 : Initialize motor 1 parameters 3 : Initialize motor 2 parameters 4 : Initialize motor 3 parameters 5 : Initialize motor 4 parameters	None	None	0	○	○	○
H04	Auto-reset (Times)	0 : Disable; 1 to 10	○	○	0	○	○	○
H05	(Reset interval)	0.5 to 20.0 s	○	○	5.0	○	○	○
H06	Cooling Fan ON/OFF Control	0 : Disable (Always in operation) 1 : Enable (ON/OFF controllable)	○	○	0	○	○	○
H07	Acceleration/Deceleration Pattern	0 : Linear 1 : S-curve (Weak) 2 : S-curve (Arbitrary, according to H57 to H60 data) 3 : Curvilinear	○	○	0	○	○	○
H08	Rotational Direction Limitation	0 : Disable 1 : Enable (Reverse rotation inhibited) 2 : Enable (Forward rotation inhibited)	None	○	0	○	○	○
H09	Starting Mode (Auto search)	0 : Disable 1 : Enable (At restart after momentary power failure) 2 : Enable (At restart after momentary power failure and at normal start)	None	○	0	○	None	None
H11	Deceleration Mode	0 : Normal deceleration 1: Coast-to-stop	○	○	0	○	○	○
H12	Instantaneous Overcurrent Limiting (Mode selection)	0 : Disable 1 : Enable	○	○	1	○	None	None
H13	Restart Mode after Momentary(Restart time)	0.1 to 10.0 s	○	△1△2	*3	○	○	○
H14	Power Failure (Frequency fall rate)	0.00: Deceleration time selected by F08, 0.01 to 100.00 Hz/s, 999: Follow the current limit command	○	○	999	○	○	○
H15	(Continuous running level)	200 to 300 V for 200 V class series 400 to 600 V for 400 V class series	○	△2	235 470	○	○	○
H16	(Allowable momentary power failure time)	0.0 to 30.0 s 999: Automatically determined by inverter	○	○	999	○	○	○
H18	Torque Limiter (Mode selection)	0 : Disable (Speed control) 2 : Enable (Torque current command) 3 : Enable (Torque command)	None	○	0	None	○	○
H26	Thermistor (for motor) (Mode selection)	0 : Disable 1 : PTC (The inverter immediately trips with 0H4 displayed.) 2 : PTC (The inverter issues output signal THM and continues to run.) 3 : NTC (When connected)	○	○	0	○	○	○
H27	(Level)	0.00 to 5.00 V	○	○	0.35	○	○	○
H28	Droop Control	60.0 to 0.0 Hz	○	○	0.0	○	○	○

H codes: High Performance Functions

Code	Name	Data setting range	Change when running	Data copying	Default setting	Drive control V/f	Drive control W/O PG	Drive control W/PG
H30	Communications Link Function (Mode selection)	Frequency command / Run command 0 : F01/C30 / F02 1 : RS-485 (Port 1) / F02 2 : F01/C30 / RS-485 (Port 1) 3 : RS-485 (Port 1) / RS-485 (Port 1) 4 : RS-485 (Port 2) / F02 5 : RS-485 (Port 2) / RS-485 (Port 1) 6 : F01/C30 / RS-485 (Port 2) 7 : RS-485 (Port 1) / RS-485 (Port 2) 8 : RS-485 (Port 2) / RS-485 (Port 2)	○	○	0	○	○	
H42	Capacitance of DC Link Bus Capacitor	Indication for replacement of DC link bus capacitor 0000 to FFFF (hex.)	○	None	—	○	○	○
H43	Cumulative Run Time of Cooling Fan	Indication for replacement of cooling fan (in units of 10 hours)	○	None	—	○	○	○
H44	Startup Counter for Motor 1	Indication of cumulative startup count 0000 to FFFF (hex.)	○	None	—	○	○	○
H45	Mock Alarm	0 : Disable 1 : Enable (Once a mock alarm occurs, the data automatically returns to 0.)	○	None	0	○	○	○
H46	Starting Mode (Auto search delay time 2)	0.1 to 10.0 s	○	△1△2	*11	○	○	None
H47	Initial Capacitance of DC Link Bus Capacitor	Indication for replacement of DC link bus capacitor 0000 to FFFF (hex.)	○	None	—	○	○	○
H48	Cumulative Run Time of Capacitors on Printed Circuit Boards	Indication for replacement of capacitors (The cumulative run time can be modified or reset in units of 10 hours.)	○	None	—	○	○	○
H49	Starting Mode (Auto search delay time 1)	0.0 to 10.0 s	○	○	0.0	○	○	○
H50	Non-linear V/f Pattern 1 (Frequency)	0.0: Cancel, 0.1 to 500.0 Hz	None	○	*12	○	None	None
H51	(Voltage)	0 to 240: Output an AVR-controlled voltage (for 200 V class series) 0 to 500: Output an AVR-controlled voltage (for 400 V class series)	None	△2	*12	○	None	None
H52	Non-linear V/f Pattern 2 (Frequency)	0.0: Cancel, 0.1 to 500.0 Hz	None	○	0.0	○	None	None
H53	(Voltage)	0 to 240: Output an AVR-controlled voltage (for 200 V class series) 0 to 500: Output an AVR-controlled voltage (for 400 V class series)	None	△2	0	○	None	None
H54	Acceleration Time (Jogging)	0.00 to 6000 s	○	○	*2	○	○	○
H55	Deceleration Time (Jogging)	0.00 to 6000 s	○	○	*2	○	○	○
H56	Deceleration Time for Forced Stop	0.00 to 6000 s	○	○	*2	○	○	○
H57	1st S-curve acceleration range(Leading edge)	0% to 100%	○	○	10	○	○	○
H58	2nd S-curve acceleration range(Trailing edge)	0% to 100%	○	○	10	○	○	○
H59	1st S-curve deceleration range(Leading edge)	0% to 100%	○	○	10	○	○	○
H60	2nd S-curve deceleration range(Trailing edge)	0% to 100%	○	○	10	○	○	○
H61	UP/DOWN Control (Initial frequency setting)	0 : 0.00 Hz 1 : Last UP/DOWN command value on releasing the run command	None	○	1	○	○	○
H63	Low Limiter(Mode selection)	0 : Limit by F16 (Frequency limiter: Low) and continue to run 1 : If the output frequency lowers below the one limited by F16 (Frequency limiter: Low), decelerate to stop the motor.	○	○	0	○	○	○
H64	(Lower limiting frequency)	0.0: Depends on F16 (Frequency limiter, Low) 0.1 to 60.0 Hz	○	○	1.6	○	None	None
H65	Non-linear V/f Pattern 3 (Frequency)	0.0: Cancel, 0.1 to 500.0 Hz	None	○	0.0	○	None	None
H66	(Voltage)	0 to 240: Output an AVR-controlled voltage (for 200 V class series) 0 to 500: Output an AVR-controlled voltage (for 400 V class series)	None	△2	0	○	None	None
H67	Auto Energy Saving Operation (Mode selection)	0 : Enable during running at constant speed 1 : Enable in all modes	○	○	0	○	None	○
H68	Slip Compensation 1 (Operating conditions)	0 : Enable during ACC/DEC and at base frequency or above 1 : Disable during ACC/DEC and enable at base frequency or above 2 : Enable during ACC/DEC and disable at base frequency or above 3 : Disable during ACC/DEC and at base frequency or above	None	○	0	○	None	None
H69	Automatic Deceleration (Mode selection)	0 : Disable 2 : Torque limit control with Force-to-stop if actual deceleration time exceeds three times the specified one 3 : DC link bus voltage control with Force-to-stop if actual deceleration time exceeds three times the specified one 4 : Torque limit control with Force-to-stop disabled 5 : DC link bus voltage control with Force-to-stop disabled	○	○	0	○	○	○
H70	Overload Prevention Control	0.00: Follow the deceleration time selected 0.01 to 100.0 Hz/s 999: Cancel	○	○	999	○	○	○
H71	Deceleration Characteristics	0 : Disable 1 : Enable	○	○	0	○	None	None
H72	Main Power Down Detection (Mode selection)	0 : Disable 1 : Enable	○	○	1	○	○	○
H73	Torque Limiter (Operating conditions)	0 : Enable during ACC/DEC and running at constant speed 1 : Disable during ACC/DEC and enable during running at constant speed 2 : Enable during ACC/DEC and disable during running at constant speed	None	○	0	○	○	○
H76	(Frequency increment limit for braking)	0.0 to 500.0 Hz	○	○	5.0	○	None	None
H77	Service Life of DC Link Bus Capacitor (Remaining time)	0 to 8760 (in units of 10 hours)	○	None	—	○	○	○
H78	Maintenance Interval (M1)	0: Disable; 1 to 9999 (in units of 10 hours)	○	None	8760	○	○	○
H79	Preset Startup Count for Maintenance (M1)	0000: Disable; 0001 to FFFF (hex.)	○	None	0	○	○	○
H80	Output Current Fluctuation Damping Gain for Motor 1	0.00 to 0.40	○	○	0.20 *14	○	None	None
H81	Light Alarm Selection 1	0000 to FFFF (hex.)	○	○	0	○	○	○
H82	Light Alarm Selection 2	0000 to FFFF (hex.)	○	○	0	○	○	○
H84	Pre-excitation (Initial level)	100% to 400%	○	○	100	None	○	○
H85	(Time)	0.00: Disable; 0.01 to 30.00 s	○	○	0.00	None	○	○
H86	Reserved *13	0 to 2	○	△1△2	0 *15	—	—	—
H87	Reserved *13	25.0 to 500.0 Hz	○	○	25.0	—	—	—
H88	Reserved *13	0 to 3; 999	○	None	0	—	—	—
H89	Reserved *13	0, 1	○	○	0	—	—	—
H90	Reserved *13	0, 1	○	○	0	—	—	—
H91	PID Feedback Wire Break Detection	0.0: Disable alarm detection 0.1 to 60.0 s	○	○	0.0	○	○	○
H92	Continuity of Running (P)	0.000 to 10.000 times; 999	○	△1△2	999	○	○	○
H93	(I)	0.010 to 10.000 s; 999	○	△1△2	999	○	○	○

*2 6.00 s for inverters with a capacity of 22 kW or below; 20.00 s for those with 30 kW or above.
*3 The factory default differs depending upon the inverter's capacity.
*11 The motor constant is automatically set, depending upon the inverter's capacity and shipping destination.
*12 The factory default differs depending upon the inverter's capacity.
*13 These function codes are reserved for particular manufacturers. Unless otherwise specified, do not access these function codes.
*14 0.10 for 200 V class series of inverters with a capacity of 37 kW or above.
*15 2 for 200 V class series of inverters with a capacity of 37 kW or above.

<Data change, reflection and strage>
None : Not available ○ : After changing data with using ⌃⌄ keys, execute and save data by pressing STORE key,
◎ After changing and executing data with using ⌃⌄ keys, save the data by pressing STORE key.

Data copy

○	Data copy is enabled.
△1	Data copy is not enabled if the inverter capacities vary.
△2	Data copy is not enabled if the voltage classes vary.
None	Data copy is not enabled.

Function Settings

H codes: High Performance Functions

Code	Name	Data setting range	Change when running	Data copying	Default setting	Drive control V/f	W/O PG	W/PG
H94	Cumulative Motor Run Time 1	0 to 9999 (The cumulative run time can be modified or reset in units of 10 hours.)	None	None	—	○	○	○
H95	DC Braking (Braking response mode)	0 : Slow 1 : Quick	○	○	1	○	None	None
H96	STOP Key Priority/ Start Check Function	Data STOP key priority Start check function 0: Disable Disable 1: Enable Disable 2: Disable Enable 3: Enable Enable	○	○	0	○	○	○
H97	Clear Alarm Data	0 : Disable 1 : Enable (Setting "1" clears alarm data and then returns to "0.")	○	None	0	○	○	○
H98	Protection/Maintenance Function (Mode selection)	0 to 255: Display data in decimal format Bit 0: Lower the carrier frequency automatically (0: Disabled; 1: Enabled) Bit 1: Detect input phase loss (0: Disabled; 1: Enabled) Bit 2: Detect output phase loss (0: Disabled; 1: Enabled) Bit 3: Select life judgment threshold of DC link bus capacitor(0: Factory default level; 1: User setup level) Bit 4: Judge the life of DC link bus capacitor (0: Disabled; 1: Enabled) Bit 5: Detect DC fan lock (0: Enabled; 1: Disabled) Bit 6: Detect braking transistor error(for 22 kW or below) (0: Disabled; 1: Enabled) Bit 7: IP20/IP40 switching (0: IP20; 1: IP40)	○	○	83	○	○	○

A codes: Motor 2 Parameters

Code	Name	Data setting range	Change when running	Data copying	Default setting	Drive control V/f	W/O PG	W/PG
A01	Maximum Frequency 2	25.0 to 500.0 Hz	None	○	*1	○	○	○
A02	Base Frequency 2	25.0 to 500.0 Hz	None	○	50.0	○	○	○
A03	Rated Voltage at Base Frequency 2	0 : Output a voltage in proportion to input voltage 80 to 240 : Output an AVR-controlled voltage (for 200 V class series) 160 to 500 : Output an AVR-controlled voltage (for 400 V class series)	None	△2	*1	○	○	○
A04	Maximum Output Voltage 2	80 to 240 : Output an AVR-controlled voltage (for 200 V class series) 160 to 500 : Output an AVR-controlled voltage (for 400 V class series)	None	△2	*1	○	None	None
A05	Torque Boost 2	0.0% to 20.0% (percentage with respect to "A03:Rated Voltage at Base Frequency 2")	○	○	*3	○	None	None
A06	Electronic Thermal Overload Protection for Motor 2 (Select motor characteristics)	1 : For a general-purpose motor with shaft-driven cooling fan 2 : For an inverter-driven motor, non-ventilated motor, or motor with separately powered cooling fan	○	○	1	○	○	○
A07	(Overload detection level)	0.00: Disable 1% to 135% of the rated current (allowable continuous drive current) of the motor	○	△1△2	*4	○	○	○
A08	(Thermal time constant)	0.5 to 75.0 min	○	○	*5	○	○	○
A09	DC Braking 2 (Braking starting frequency)	0.0 to 60.0 Hz	○	○	0.0	○	○	○
A10	(Braking level)	0% to 100% (HD mode), 0% to 80% (LD mode)	○	○	0	○	○	○
A11	(Braking time)	0.00: Disable; 0.01 to 30.00 s	○	○	0.00	○	○	○
A12	Starting Frequency 2	0.0 to 60.0 Hz	○	○	0.5	○	○	○
A13	Load Selection/ Auto Torque Boost/ Auto Energy Saving Operation 2	0 : Variable torque load 1 : Constant torque load 2 : Auto-torque boost 3 : Auto-energy saving operation(Variable torque load during ACC/DEC) 4 : Auto-energy saving operation(Constant torque load during ACC/DEC) 5 : Auto-energy saving operation(Auto-torque boost during ACC/DEC)	None	○	1	○	None	○
A14	Drive Control Selection 2	0 : V/f control with slip compensation inactive 1 : Dynamic torque vector control 2 : V/f control with slip compensation active 5 : Vector control without speed sensor 6 : Vector control with speed sensor	None	○	0	○	○	○
A15	Motor 2 (No. of poles)	2 to 22 poles	None	△1△2	4	○	○	○
A16	(Rated capacity)	0.01 to 1000 kW (when A39 = 0, 2. 3 or 4) 0.01 to 1000 HP (when A39 = 1)	None	△1△2	*11	○	○	○
A17	(Rated current)	0.00 to 2000 A	None	△1△2	*11	○	○	○
A18	(Auto-tuning)	0 : Disable 1 : Tune while the motor stops. (%R1, %X and rated slip frequency) 2 : Tune while the motor is rotating under V/f control (%R1, %X, rated slip frequency, no-load current, magnetic saturation factors 1 to 5, and magnetic saturation extension factors "a" to "c") 3 : Tune while the motor is rotating under vector control (%R1, %X, rated slip frequency, no-load current, magnetic saturation factors 1 to 5, and magnetic saturation extension factors "a" to "c." Available when the vector control is enabled.)	None	None	0	○	○	○
A19	(Online tuning)	0 : Disable 1 : Enable	○	○	0	○	○	○
A20	(No-load current)	0.00 to 2000 A	None	△1△2	*11	○	○	○
A21	(%R1)	0.00% to 50.00%	○	△1△2	*11	○	○	○
A22	(%X)	0.00% to 50.00%	○	△1△2	*11	○	○	○
A23	(Slip compensation gain for driving)	0.0% to 200.0%	◎	○	100.0	○	○	○
A24	(Slip compensation response time)	0.01 to 10.00s	○	△1△2	0.12	○	None	None
A25	(Slip compensation gain for braking)	0.0% to 200.0%	◎	○	100.0	○	○	○
A26	(Rated slip frequency)	0.00 to 15.00 Hz	None	△1△2	*11	○	○	○
A27	(Iron loss factor 1)	0.00% to 20.00%	○	△1△2	*11	○	○	○
A28	(Iron loss factor 2)	0.00% to 20.00%	○	△1△2	0.00	○	○	○
A29	(Iron loss factor 3)	0.00% to 20.00%	○	△1△2	0.00	○	○	○
A30	(Magnetic saturation factor 1)	0.0% to 300.0%	○	△1△2	*11	○	○	○
A31	(Magnetic saturation factor 2)	0.0% to 300.0%	○	△1△2	*11	○	○	○
A32	(Magnetic saturation factor 3)	0.0% to 300.0%	○	△1△2	*11	○	○	○
A33	(Magnetic saturation factor 4)	0.0% to 300.0%	○	△1△2	*11	○	○	○
A34	(Magnetic saturation factor 5)	0.0% to 300.0%	○	△1△2	*11	○	○	○
A35	(Magnetic saturation extension factor "a")	0.0% to 300.0%	○	△1△2	*11	○	○	○
A36	(Magnetic saturation extension factor "b")	0.0% to 300.0%	○	△1△2	*11	○	○	○
A37	(Magnetic saturation extension factor "c")	0.0% to 300.0%	○	△1△2	*11	○	○	○

●A codes: Motor 2 Parameters

Code	Name	Data setting range	Change when running	Data copying	Default setting	Drive control V/f	Drive control W/O PG	Drive control W/PG
A39	Motor 2 Selection	0 : Motor characteristics 0 (Fuji standard motors, 8-series) 1 : Motor characteristics 1 (HP rating motors) 2 : Motor characteristics 2 (Fuji motors exclusively designed for vector control) 3 : Motor characteristics 3 (Fuji standard motors, 6-series) 4 : Other motors	None	△1△2	0	○	○	○
A40	Slip Compensation 2 (Operating conditions)	0 : Enable during ACC/DEC and at base frequency or above 1 : Disable during ACC/DEC and enable at base frequency or above 2 : Enable during ACC/DEC and disable at base frequency or above 3 : Disable during ACC/DEC and at base frequency or above	None	○	0	○	None	None
A41	Output Current Fluctuation Damping Gain for Motor 2	0.00 to 0.40	○	○	0.20	○	None	None
A42	Motor/Parameter Switching 2 (Mode selection)	0 : Motor (Switch to the 2nd motor) 1 : Parameter (Switch to particular A codes)	None	○	0	○	○	○
A43	Speed Control 2 (Speed command filter)	0.000 to 5.000 s	○	○	0.020	None	○	○
A44	(Speed detection filter)	0.000 to 0.100 s	◎	○	0.005	None	○	○
A45	P (Gain)	0.1 to 200.0 times	◎	○	10.0	None	○	○
A46	I (Integral time)	999: Disable integral action	○	○	0.100	None	○	○
A47	(Feed forward gain)	0.00 to 99.99s	○	○	0.00	None	○	○
A48	(Output filter)	0.000 to 0.100 s	○	○	0.002	None	○	○
A51	Cumulative Motor Run Time 2	0 to 9999 (The cumulative run time can be modified or reset in units of 10 hours.)	None	None	—	○	○	○
A52	Startup Counter for Motor 2	Indication of cumulative startup count 0000 to FFFF (hex.)	○	None	—	○	○	○
A53	Motor 2 (%X correction factor 1)	0% to 300%	○	△1△2	100	○	○	○
A54	(%X correction factor 2)	0% to 300%	○	△1△2	100	○	○	○
A55	(Torque current under vector control)	0.00 to 2000 A	None	△1△2	*11	None	○	○
A56	(Induced voltage factor under vector control)	50 to 100	None	△1△2	85	None	○	○
A57	Reserved *9	0.000 to 20.000 s	None	△1△2	0.082	—	—	—

*1 The factory default differs depending upon the shipping destination.
*3 The factory default differs depending upon the inverter's capacity.
*4 The motor rated current is automatically set.
*5 5.0 min for inverters with a capacity of 22 kW or below; 10.0 min for those with 30 kW or above.
*11 The motor constant is automatically set, depending upon the inverter's capacity and shipping destination.
*13 These function codes are reserved for particular manufacturers. Unless otherwise specified, do not access these function codes.

<Data change, reflection and strage>
None : Not available ○ : After changing data with using ∧ ∨ keys, execute and save data by pressing key,
◎ After changing and executing data with using ∧ ∨ keys, save the data by pressing key.

Data copy

○	Data copy is enabled.
△1	Data copy is not enabled if the inverter capacities vary.
△2	Data copy is not enabled if the voltage classes vary.
None	Data copy is not enabled.

Function Settings

b codes: Motor 3 Parameters

Code	Name	Data setting range	Change when running	Data copying	Default setting	Drive control V/f	W/O PG	W/PG
b01	Maximum Frequency 3	25.0 to 500.0 Hz	None	○	*1	○	○	○
b02	Base Frequency 3	25.0 to 500.0 Hz	None	○	50.0	○	○	○
b03	Rated Voltage at Base Frequency 3	0 : Output a voltage in proportion to input voltage 80 to 240 : Output an AVR-controlled voltage(for 200 V class series) 160 to 500 : Output an AVR-controlled voltage(for 400 V class series)	None	△2	*1	○	○	○
b04	Maximum Output Voltage 3	80 to 240 : Output an AVR-controlled voltage(for 200 V class series) 160 to 500 : Output an AVR-controlled voltage(for 400 V class series)	None	△2	*1	○	None	None
b05	Torque Boost 3	0.0% to 20.0%(percentage with respect to "b03: Rated Voltage at Base Frequency 3")	○	○	*3	○	None	None
b06	Electronic Thermal Overload Protection for Motor 3 (Select motor characteristics)	1 : For a general-purpose motor with shaft-driven cooling fan 2 : For an inverter-driven motor, non-ventilated motor, or motor with separately powered cooling fan	○	○	1	○	○	○
b07	(Overload detection level)	0.00: Disable 1% to 135% of the rated current (allowable continuous drive current) of the motor	○	△1△2	*4	○	○	○
b08	(Thermal time constant)	0.5 to 75.0 min	○	○	*5	○	○	○
b09	DC Braking 3 (Braking starting frequency)	0.0 to 60.0 Hz	○	○	0.0	○	○	○
b10	(Braking level)	0% to 100% (HD mode), 0% to 80% (LD mode)	○	○	0	○	○	○
b11	(Braking time)	0.00: Disable; 0.01 to 30.00 s	○	○	0.00	○	○	○
b12	Starting Frequency 3	0.0 to 60.0 Hz	○	○	0.5	○	○	○
b13	Load Selection/ Auto Torque Boost/ Auto Energy Saving Operation 3	0 : Variable torque load 1 : Constant torque load 2 : Auto-torque boost 3 : Auto-energy saving operation(Variable torque load during ACC/DEC) 4 : Auto-energy saving operation(Constant torque load during ACC/DEC) 5 : Auto-energy saving operation(Auto-torque boost during ACC/DEC)	None	○	1	○	None	○
b14	Drive Control Selection 3	0 : V/f control with slip compensation inactive 1 : Dynamic torque vector control 2 : V/f control with slip compensation active 5 : Vector control without speed sensor 6 : Vector control with speed sensor	None	○	0	○	○	○
b15	Motor 3 (No. of poles)	2 to 22 poles	None	△1△2	4	○	○	○
b16	(Rated capacity)	0.01 to 1000 kW (when b39 = 0, 2, 3 or 4) 0.01 to 1000 HP (when b39 = 1)	None	△1△2	*11	○	○	○
b17	(Rated current)	0.00 to 2000 A	None	△1△2	*11	○	○	○
b18	(Auto-tuning)	0 : Disable 1 : Tune while the motor stops. (%R1, %X and rated slip frequency) 2 : Tune while the motor is rotating under V/f control (%R1, %X, rated slip frequency, no-load current, magnetic saturation factors 1 to 5, and magnetic saturation extension factors "a" to "c") 3 : Tune while the motor is rotating under vector control (%R1, %X, rated slip frequency, no-load current, magnetic saturation factors 1 to 5, and magnetic saturation extension factors "a" to "c." Available when the vector control is enabled.)	None	None	0	○	○	○
b19	(Online tuning)	0 : Disable 1 : Enable	○	○	0	○	○	○
b20	(No-load current)	0.00 to 2000 A	None	△1△2	*11	○	○	○
b21	(%R1)	0.00% to 50.00%	○	△1△2	*11	○	○	○
b22	(%X)	0.00% to 50.00%	○	△1△2	*11	○	○	○
b23	(Slip compensation gain for driving)	0.0% to 200.0%	◎	○	100.0	○	○	○
b24	(Slip compensation response time)	0.01 to 10.00 s	○	△1△2	0.12	○	None	None
b25	(Slip compensation gain for braking)	0.0% to 200.0%	◎	○	100.0	○	○	○
b26	(Rated slip frequency)	0.00 to 15.00 Hz	None	△1△2	*11	○	○	○
b27	(Iron loss factor 1)	0.00% to 20.00%	○	△1△2	*11	○	○	○
b28	(Iron loss factor 2)	0.00% to 20.00%	○	△1△2	0.00	○	○	○
b29	(Iron loss factor 3)	0.00% to 20.00%	○	△1△2	0.00	○	○	○
b30	(Magnetic saturation factor 1)	0.0% to 300.0%	○	△1△2	*11	○	○	○
b31	(Magnetic saturation factor 2)	0.0% to 300.0%	○	△1△2	*11	○	○	○
b32	(Magnetic saturation factor 3)	0.0% to 300.0%	○	△1△2	*11	○	○	○
b33	(Magnetic saturation factor 4)	0.0% to 300.0%	○	△1△2	*11	○	○	○
b34	(Magnetic saturation factor 5)	0.0% to 300.0%	○	△1△2	*11	○	○	○
b35	(Magnetic saturation extension factor "a")	0.0% to 300.0%	○	△1△2	*11	○	○	○
b36	(Magnetic saturation extension factor "b")	0.0% to 300.0%	○	△1△2	*11	○	○	○
b37	(Magnetic saturation extension factor "c")	0.0% to 300.0%	○	△1△2	*11	○	○	○
b39	Motor 3 Selection	0 : Motor characteristics 0 (Fuji standard motors, 8-series) 1 : Motor characteristics 1 (HP rating motors) 2 : Motor characteristics 2 (Fuji motors exclusively designed for vector control) 3 : Motor characteristics 3 (Fuji standard motors, 6-series) 4 : Other motors	None	△1△2	0	○	○	○
b40	Slip Compensation 3 (Operating conditions)	0 : Enable during ACC/DEC and at base frequency or above 1 : Disable during ACC/DEC and enable at base frequency or above 2 : Enable during ACC/DEC and disable at base frequency or above 3 : Disable during ACC/DEC and at base frequency or above	None	○	0	○	None	None
b41	Output Current Fluctuation Damping Gain for Motor 3	0.00 to 0.40	○	○	0.20	○	None	None
b42	Motor/Parameter Switching 3 (Mode selection)	0 : Motor (Switch to the 3rd motor) 1 : Parameter (Switch to particular b codes)	None	○	0	○	○	○
b43	Speed Control 3 (Speed command filter)	0.000 to 5.000 s	○	○	0.020	None	○	○
b44	(Speed detection filter)	0.000 to 0.100 s	◎	○	0.005	None	○	○
b45	P (Gain)	999: Disable integral action	◎	○	10.0	None	○	○
b46	I (Integral time)	0.00 to 99.99s	○	○	0.100	None	○	○
b47	(Feed forward gain)	0.001 to 1.000 s	○	○	0.00	None	○	○
b48	(Output filter)	0.000 to 0.100 s	○	○	0.020	None	○	○
b51	Cumulative Motor Run Time 3	0 to 9999 (The cumulative run time can be modified or reset in units of 10 hours.)	None	None	—	○	○	○
b52	Startup Counter for Motor 3	Indication of cumulative startup count 0000 to FFFF (hex.)	○	None	—	○	○	○
b53	Motor 3 (%X correction factor 1)	0% to 300%	○	△1△2	100	○	○	○
b54	(%X correction factor 2)	0% to 300%	○	△1△2	100	○	○	○
b55	Motor3 (Torque current under vector control)	0.00 to 2000 A	None	△1△2	*11	None	○	○
b56	(Induced voltage factor under vector control)	50 to 100	None	△1△2	85	None	○	○
b57	Reserved *13	0.000 to 20.000 s	None	△1△2	0.082	—	—	—

●r codes: Motor 4 Parameters

Code	Name	Data setting range	Change when running	Data copying	Default setting	Drive control V/f	Drive control W/O PG	Drive control W/PG
r01	Maximum Frequency 4	25.0 to 500.0 Hz	None	○	*1	○	○	○
r02	Base Frequency 4	25.0 to 500.0 Hz	None	○	50.0	○	○	○
r03	Rated Voltage at Base Frequency 4	0 : Output a voltage in proportion to input voltage 80 to 240 : Output an AVR-controlled voltage(for 200 V class series) 160 to 500 : Output an AVR-controlled voltage(for 400 V class series)	None	△2	*1	○	○	○
r04	Maximum Output Voltage 4	80 to 240 : Output an AVR-controlled voltage(for 200 V class series) 160 to 500 : Output an AVR-controlled voltage(for 400 V class series)	None	△2	*1	○	○	None
r05	Torque Boost 4	0.0% to 20.0%(percentage with respect to "r03:Rated Voltage at Base Frequency 4")	○	○	*3	○	None	None
r06	Electronic Thermal Overload Protection for Motor 4 (Select motor characteristics)	1 : For a general-purpose motor with shaft-driven cooling fan 2 : For an inverter-driven motor, non-ventilated motor, or motor with separately powered cooling fan	○	○	1	○	○	○
r07	(Overload detection level)	0.00: Disable 1% to 135% of the rated current (allowable continuous drive current) of the motor	○	△1△2	*4	○	○	○
r08	(Thermal time constant)	0.5 to 75.0 min	○	○	*5	○	○	○
r09	DC Braking 4 (Braking starting frequency)	0.0 to 60.0 Hz	○	○	0.0	○	○	○
r10	(Braking level)	0% to 100% (HD mode), 0% to 80% (LD mode)	○	○	0	○	○	○
r11	(Braking time)	0.00: Disable; 0.01 to 30.00 s	○	○	0.00	○	○	○
r12	Starting Frequency 4	0.0 to 60.0 Hz	○	○	0.5	○	○	○
r13	Load Selection/ Auto Torque Boost/ Auto Energy Saving Operation 4	0 : Variable torque load 1 : Constant torque load 2 : Auto-torque boost 3 : Auto-energy saving operation (Variable torque load during ACC/DEC) 4 : Auto-energy saving operation (Constant torque load during ACC/DEC) 5 : Auto-energy saving operation (Auto-torque boost during ACC/DEC)	None	○	1	○	None	○
r14	Drive Control Selection 4	0 : V/f control with slip compensation inactive 1 : Dynamic torque vector control 2 : V/f control with slip compensation active 5 : Vector control without speed sensor 6 : Vector control with speed sensor	None	○	0	○	○	○
r15	Motor 4 (No. of poles)	2 to 22 poles	None	△1△2	4	○	○	○
r16	(Rated capacity)	0.01 to 1000 kW (when r39 = 0, 2, 3 or 4) 0.01 to 1000 HP (when r39 = 1)	None	△1△2	*11	○	○	○
r17	(Rated current)	0.00 to 2000 A	None	△1△2	*11	○	○	○
r18	(Auto-tuning)	0 : Disable 1 : Tune while the motor stops. (%R1, %X and rated slip frequency) 2 : Tune while the motor is rotating under V/f control (%R1, %X, rated slip frequency, no-load current, magnetic saturation factors 1 to 5, and magnetic saturation extension factors "a" to "c") 3 : Tune while the motor is rotating under vector control (%R1, %X, rated slip frequency, no-load current, magnetic saturation factors 1 to 5, and magnetic saturation extension factors "a" to "c." Available when the vector control is enabled.)	None	None	0	○	○	○
r19	(Online tuning)	0 : Disable 1 : Enable	○	○	0	○	○	○
r20	(No-load current)	0.00 to 2000 A	None	△1△2	*11	○	○	○
r21	(%R1)	0.00% to 50.00%	○	△1△2	*11	○	○	○
r22	(%X)	0.00% to 50.00%	○	△1△2	*11	○	○	○
r23	(Slip compensation gain for driving)	0.0% to 200.0%	◎	○	100.0	○	○	○
r24	(Slip compensation response time)	0.01 to 10.00 s	○	△1△2	0.12	○	None	None
r25	(Slip compensation gain for braking)	0.0% to 200.0%	◎	○	100.0	○	○	○
r26	(Rated slip frequency)	0.00 to 15.00 Hz	None	△1△2	*11	○	○	○
r27	(Iron loss factor 1)	0.00% to 20.00%	○	△1△2	*11	○	○	○
r28	(Iron loss factor 2)	0.00% to 20.00%	○	△1△2	0.00	○	○	○
r29	(Iron loss factor 3)	0.00% to 20.00%	○	△1△2	0.00	○	○	○
r30	(Magnetic saturation factor 1)	0.0% to 300.0%	○	△1△2	*11	○	○	○
r31	(Magnetic saturation factor 2)	0.0% to 300.0%	○	△1△2	*11	○	○	○
r32	(Magnetic saturation factor 3)	0.0% to 300.0%	○	△1△2	*11	○	○	○
r33	(Magnetic saturation factor 4)	0.0% to 300.0%	○	△1△2	*11	○	○	○
r34	(Magnetic saturation factor 5)	0.0% to 300.0%	○	△1△2	*11	○	○	○
r35	(Magnetic saturation extension factor "a")	0.0% to 300.0%	○	△1△2	*11	○	○	○
r36	(Magnetic saturation extension factor "b")	0.0% to 300.0%	○	△1△2	*11	○	○	○
r37	(Magnetic saturation extension factor "c")	0.0% to 300.0%	○	△1△2	*11	○	○	○
r39	Motor 4 Selection	0 : Motor characteristics 0 (Fuji standard motors, 8-series) 1 : Motor characteristics 1 (HP rating motors) 2 : Motor characteristics 2 (Fuji motors exclusively designed for vector control) 3 : Motor characteristics 3 (Fuji standard motors, 6-series) 4 : Other motors	None	△1△2	0	○	○	○
r40	Slip Compensation 4 (Operating conditions)	0 : Enable during ACC/DEC and at base frequency or above 1 : Disable during ACC/DEC and enable at base frequency or above 2 : Enable during ACC/DEC and disable at base frequency or above 3 : Disable during ACC/DEC and at base frequency or above	None	○	0	○	None	None
r41	Output Current Fluctuation Damping Gain for Motor 4	0.00 to 0.40	○	○	0.20	○	None	None
r42	Motor/Parameter Switching 4(Mode selection)	0 : Motor (Switch to the 4th motor) 1 : Parameter (Switch to particular r codes)	None	○	0	○	○	○
r43	Speed Control 4(Speed command filter)	0.000 to 5.000 s	○	○	0.020	None	○	○
r44	(Speed detection filter)	0.000 to 0.100 s	◎	○	0.005	None	○	○
r45	P (Gain)	0.1 to 200.0 times	◎	○	10.0	None	○	○
r46	I (Integral time)	999: Disable integral action	○	○	0.100	None	○	○
r47	(Feed forward gain)	0.00 to 99.99s	○	○	0.00	None	○	○
r48	(Output filter)	0.000 to 0.100 s	○	○	0.020	None	○	○
r51	Cumulative Motor Run Time 4	0 to 9999 (The cumulative run time can be modified or reset in units of 10 hours.)	None	None	—	○	○	○
r52	Startup Counter for Motor 4	Indication of cumulative startup count 0000 to FFFF (hex.)	○	None	—	○	○	○
r53	Motor 4(%X correction factor 1)	0% to 300%	○	△1△2	100	○	○	○
r54	(%X correction factor 2)	0% to 300%	○	△1△2	100	○	○	○
r55	(Torque current under vector control)	0.00 to 2000 A	None	△1△2	*11	None	○	○
r56	(Induced voltage factor under vector control)	50 to 100	None	△1△2	85	None	○	○
r57	Reserved *13	0.000 to 20.000 s	None	△1△2	0.082	—	—	—

*1 The factory default differs depending upon the shipping destination.
*3 The factory default differs depending upon the inverter's capacity.
*4 The motor rated current is automatically set.
*5 5.0 min for inverters with a capacity of 22 kW or below; 10.0 min for those with 30 kW or above.
*11 The motor constant is automatically set, depending upon the inverter's capacity and shipping destination.
*13 These function codes are reserved for particular manufacturers. Unless otherwise specified, do not access these function codes.

<Data change, reflection and strage>

None : Not available ○ : After changing data with using ∧∨ keys, execute and save data by pressing STORE key,
◎ After changing and executing data with using ∧∨ keys, save the data by pressing STORE key.

Data copy

○	Data copy is enabled.
△1	Data copy is not enabled if the inverter capacities vary.
△2	Data copy is not enabled if the voltage classes vary.
None	Data copy is not enabled.

Function Settings

J codes: Application Functions 1

Code	Name	Data setting range	Change when running	Data copying	Default setting	Drive control V/f	Drive control W/O PG	Drive control W/PG
J01	PID Control (Mode selection)	0 : Disable 1 : Enable (Process control, normal operation) 2 : Enable (Process control, inverse operation) 3 : Enable (Dancer control)	None	○	0	○	○	○
J02	(Remote command SV)	0 : ⌃ / ⌄ keys on keypad 1 : PID process command 1 (Analog input terminals [12], [C1], and [V2]) 3 : UP/DOWN 4 : Command via communications link	None	○	0	○	○	○
J03	P (Gain)	0.000 to 30.000 times	○	○	0.100	○	○	○
J04	I (Integral time)	0.0 to 3600.0 s	○	○	0.0	○	○	○
J05	D (Differential time)	0.00 to 600.00 s	○	○	0.00	○	○	○
J06	(Feedback filter)	0.0 to 900.0 s	○	○	0.5	○	○	○
J08	(Pressurization starting frequency)	0.0 to 500.0 Hz	○	○	0.0	○	○	○
J09	(Pressurizing time)	0 to 60 s	○	○	0	○	○	○
J10	(Anti reset windup)	0% to 200%	○	○	200	○	○	○
J11	(Select alarm output)	0 : Absolute-value alarm 1 : Absolute-value alarm (with Hold) 2 : Absolute-value alarm (with Latch) 3 : Absolute-value alarm (with Hold and Latch) 4 : Deviation alarm 5 : Deviation alarm (with Hold) 6 : Deviation alarm (with Latch) 7 : Deviation alarm (with Hold and Latch)	○	○	0	○	○	○
J12	(Upper level alarm (AH))	-100% to 100%	○	○	100	○	○	○
J13	(Lower level alarm (AL))	-100% to 100%	○	○	0	○	○	○
J15	(Stop frequency for slow flowrate)	0.0: Disable; 1.0 to 500.0 Hz	○	○	0.0	○	○	○
J16	(Slow flowrate level stop latency)	0 to 60 s	○	○	30	○	○	○
J17	(Starting frequency)	0.0 to 500.0 Hz	○	○	0.0	○	○	○
J18	(Upper limit of PID process output)	-150% to 150%; 999: Depends on setting of F15	○	○	999	○	○	○
J19	(Lower limit of PID process output)	-150% to 150%; 999: Depends on setting of F16	○	○	999	○	○	○
J21	Dew Condensation Prevention (Duty)	1% to 50%	○	○	1	○	○	○
J22	Commercial Power Switching Sequence	0 : Keep inverter operation (Stop due to alarm) 1 : Automatically switch to commercial-power operation	None	○	0	○	○	○
J56	PID Control (Speed command filter)	0.00 to 5.00 s	○	○	0.10	○	○	○
J57	(Dancer reference position)	-100% to 0% to 100%	○	○	0	○	○	○
J58	(Detection width of dancer position deviation)	0: Disable switching PID constant 1% to 100% (Manually set value)	○	○	0	○	○	○
J59	P (Gain) 2	0.000 to 30.000 times	○	○	0.100	○	○	○
J60	I (Integral time) 2	0.0 to 3600.0 s	○	○	0.0	○	○	○
J61	D (Differential time) 3	0.00 to 600.00 s	○	○	0.00	○	○	○
J62	(PID control block selection)	0 to 3 bit 0 : PID output polarity 0 : Plus (add), 1: Minus (subtract) bit 1 : Select compensation factor for PID output 0 = Ratio (relative to the main setting) 1 = Speed command (relative to maximum frequency)	None	○	0	○	○	○
J68	Braking Signal (Brake-OFF current)	0% to 300%	○	○	100	○	○	○
J69	(Brake-OFF frequency/speed)	0.0 to 25.0 Hz	○	○	1.0	○	○	○
J70	(Brake-OFF timer)	0.0 to 5.0 s	○	○	1.0	○	○	○
J71	(Brake-ON frequency/speed)	0.0 to 25.0 Hz	○	○	1.0	○	○	○
J72	(Brake-ON timer)	0.0 to 5.0 s	○	○	1.0	○	○	○
J95	(Brake-OFF torque)	0% to 300%	○	○	100	○	○	○
J96	(Speed condition selection)	0 to 31	None	○	0			
		Bit 0: Criterion speed for brake-ON (0: Detected speed, 1: Reference speed)				None	○	○
		Bit 1: Reserved.				None	None	None
		Bit 2: Response for brake-OFF current (0: Slow response, 1: Quick response)				○	○	○
		Bit 3: Criterion frequency for brake-ON (0: Stop frequency (F25),1: Brake-ON frequency (J71))				None	○	○
		Bit 4: Output condition of brake signal (0: Independent of a run command ON/OFF1: Only when a run command is OFF)				None	○	○
J97	Servo-lock (Gain)	0.00 to 10.00	○	○	0.10	None	None	○
J98	(Completion timer)	0.000 to 1.000	○	○	0.100	None	None	○
J99	(Completion width)	0 to 9999	○	○	10	None	None	○

d codes: Application Functions 2

Code	Name	Data setting range	Change when running	Data copying	Default setting	Drive control V/f	Drive control W/O PG	Drive control W/PG
d01	Speed control 1 (Speed command filter)	0.000 to 5.000 s	○	○	0.020	None	○	○
d02	(Speed detection filter)	0.000 to 0.100 s	◎	○	0.005	None	○	○
d03	P (Gain)	0.1 to 200.0 times	◎	○	10.0	None	○	○
d04	I (Integral time)	999: Disable integral action	○	○	0.100	None	○	○
d05	(Feed forward gain)	0.00 to 99.99s	○	○	0.00	None	○	○
d06	(Output filter)	0.000 to 0.100 s	○	○	0.002	None	○	○
d09	Speed control (Jogging) (Speed command filter)	0.000 to 5.000 s	○	○	0.020	None	○	○
d10	(Speed detection filter)	0.000 to 0.100 s	◎	○	0.005	None	○	○
d11	P (Gain)	0.1 to 200.0 times	◎	○	10.0	None	○	○
d12	I (Integral time)	999: Disable integral action	◎	○	0.100	None	○	○
d13	(Output filter)	0.000 to 0.100 s	○	○	0.002	None	○	○

●d codes: Application Functions 2

Code	Name	Data setting range	Change when running	Data copying	Default setting	Drive control V/f	Drive control W/O PG	Drive control W/PG
d14	Feedback Input (Pulse input property)	0 : Pulse train sign/Pulse train input 1 : Forward rotation pulse/Reverse rotation pulse 2 : A/B phase with 90 degree phase shift	None	○	2	None	None	○
d15	(Encoder pulse resolution)	0014 to EA60 (hex.) (20 to 60000 pulses)	None	○	0400 (1024)	None	None	○
d16	(Pulse count factor 1)	1 to 9999	None	○	1	None	None	○
d17	(Pulse count factor 2)	1 to 9999	None	○	1	None	None	○
d21	Speed Agreement/PG Error(Hysteresis width)	0.0% to 50.0%	○	○	10.0	None	○	○
d22	(Detection timer)	0.00 to 10.00 s	○	○	0.50	None	○	○
d23	PG Error Processing	0 : Continue to run 1 : Stop running with alarm 1 2 : Stop running with alarm 2 3 : Continue to run 2 4 : Stop running with alarm 3 5 : Stop running with alarm 4	None	○	2	None	○	○
d24	Zero Speed Control	0 : Not permit at startup 1 : Permit at startup	None	○	0	None	○	○
d25	ASR Switching Time	0.000 to 1.000 s	○	○	0.000	None	○	○
d27	Servo lock(Gain switching time)	0.000 to 1.000 s	○	○	0.000	None	None	○
d28	(Gain 2)	0.00 to 10.00 times	○	○	0.10	None	None	○
d32	Torque control(Speed limit 1)	0 to 110%	○	○	100	None	○	○
d33	(Speed limit 2)	0 to 110%	○	○	100	None	○	○
d35	Overspeed Detection Level	0 to 120% 999: Depends on setting of d32 or d33	○	○	999	None	○	○
d41	Application-defined Control	0: Disable (Ordinary control)	None	○	0	○	○	○
		1: Enable (Constant peripheral speed control)				None	None	None
		2: Enable (Simultaneous synchronization, without Z phase)				None	None	○
		3: Enable (Standby synchronization)				None	None	○
		4: Enable (Simultaneous synchronization, with Z phase)				None	None	○
d51	Reserved *13	0 to 500	None	○	*16	—	—	—
d52	Reserved *13	0 to 500	None	○	*16	—	—	—
d53	Reserved *13	0 to 500	None	○	*16	—	—	—
d54	Reserved *13	0 to 500	None	○	*16	—	—	—
d55	Reserved *13	0: Enable factorization 1: Disable factorization	None	○	0	—	—	—
d59	Command (Pulse Rate Input) (Pulse input property)	0: Pulse train sign/Pulse train input 1: Forward rotation pulse/Reverse rotation pulse 2: A/B phase with 90 degree phase shift	None	○	0	○	○	○
d60	(Encoder pulse resolution)	0014 to 0E10 (hex.) (20 to 3600 pulses)	None	○	0400 (1024)	None	None	○
d61	(Filter time constant)	0.000 to 5.000 s	○	○	0.005	○	○	○
d62	(Pulse count factor 1)	1 to 9999	○	○	1	○	○	○
d63	(Pulse count factor 2)	1 to 9999	○	○	1	○	○	○
d67	Starting Mode(Auto search)	0: Disable 1: Enable (At restart after momentary power failure) 2: Enable (At restart after momentary power failure and at normal start)	None	○	2	None	○	None
d68	Reserved *13	0.0 to 10.0 Hz	None	○	40	—	—	—
d71	Synchronous Operation (Main speed regulator gain)	0.00 to 1.50 times	○	○	1.00	None	None	○
d72	(APR P gain)	0.00 to 200.00 times	○	○	15.00	None	None	○
d73	(APR positive output limiter)	20 to 200%, 999: No limiter	○	○	999	None	None	○
d74	(APR negative output limiter)	20 to 200%, 999: No limiter	○	○	999	None	None	○
d75	(Z phase alignment gain)	0.00 to 10.00 times	○	○	1.00	None	None	○
d76	(Synchronous offset angle)	0 to 359 degrees	○	○	0	None	None	○
d77	(Synchronization completion detection angle)	0 to 100 degrees	○	○	15	None	None	○
d78	(Excessive deviation detection range)	0 to 65535 (Display in units of 10 pulses) For 10000 or more: Display of the upper four digits in units of 100 pulses)	○	○	65535*17	None	None	○
d81	Reserved	0 or 1	○	○	1*18	——		—
d82	Magnetic Flux Weakening Control (Vector control without speed sensor)	0 : Disable 1 : Enable	○	○	1	None	None	None
d83	Magnetic Flux Weakening Low Limiter (Vector control without speed sensor)	10 to 70%	○	○	40%	None	None	None
d84	Reserved	0 to 20 dB	○	○	5 dB*18	—	—	—
d85	Reserved	0 to 200%	○	○	95%*18	—	—	—
d86	Acceleration/Deceleration filter constant	0.000 to 5.000s	○	○	0.000	○	None	None
d90	Magnetic Flux Level during Deceleration (under vector control)	100 to 300%	○	○	150%	None	○	○
d91	Reserved	0.00 to 2.00, 999	○	○	999*18	—	—	—
d92	Reserved	0.00 to 3.00	○	○	0.00*18	—	—	—
d98	Reserved	0000 to FFFF (hex.)	○	○	0000*18	○	None	None
d99	Function Extension 1	0 to 31	○	○	0	—	—	—
		Bit 0: Reserved *18				—	—	—
		Bit 1: Reserved *18				—	—	—
		Bit 2: Reserved *18				—	—	—
		Bit 3: JOG (Ready for jogging) via the communications link (0: Disable, 1: Enable)				○	○	○
		Bit 4: Reserved *18				—	—	—

*11 The motor constant is automatically set, depending upon the inverter's capacity and shipping destination.
*13 These function codes are reserved for particular manufacturers. Unless otherwise specified, do not access these function codes.
*16 The factory default differs depending upon the inverter's capacity.
5 for inverters with a capacity of 3.7 kW (4.0 kW for the EU) or below; 10 for those with 5.5 kW to 22 kW; 20 for those with 30 kW or above
*17 The standard keypad displays 6553 on the LED monitor and lights the x10 LED.
*18 These function codes are reserved for particular manufacturers. Unless otherwise specified, do not access these function codes.

Data copy

○	Data copy is enabled.
△1	Data copy is not enabled if the inverter capacities vary.
△2	Data copy is not enabled if the voltage classes vary.
None	Data copy is not enabled.

<Data change, reflection and strage>
None : Not available ○ : After changing data with using ⌃⌄ keys, execute and save data by pressing key,
◎ After changing and executing data with using ⌃⌄ keys, save the data by pressing key.

Function Settings

●U codes: Application Functions 1

Code	Name	Data setting range	Change when running	Data copying	Default setting	Drive control V/f	Drive control W/O PG	Drive control W/PG
U00	Customizable Logic (Mode selection)	0 : Disable 1 : Enable (Customizable logic operation)	○	○	0	○	○	○
U01	Customizable Logic: (Input 1)	0 (1000) : Inverter running (RUN)	None	○	0	○	○	○
U02	Step 1 (Input 2)	1 (1001) : Frequency (speed) arrival signal (FAR)	None	○	0	○	○	○
		2 (1002) : Frequency (speed) detected (FDT)				○	○	○
		3 (1003) : Undervoltage detected (Inverter stopped) (LU)				○	○	○
		4 (1004) : Torque polarity detected (B/D)				○	○	○
		5 (1005) : Inverter output limiting (IOL)				○	○	○
		6 (1006) : Auto-restarting after momentary power failure (IPF)				○	○	○
		7 (1007) : Motor overload early warning (OL)				○	○	○
		8 (1008) : Keypad operation enabled (KP)				○	○	○
		10 (1010) : Inverter ready to run (RDY)				○	○	○
		11 : Switch motor drive source between commercial power and inverter output (For MC on commercial line) (SW88)				○	None	None
		12 : Switch motor drive source between commercial power and inverter output (For secondary side) (SW52-2)				○	None	None
		13 : Switch motor drive source between commercial power and inverter output (For primary side) (SW52-1)				○	None	None
		15 (1015) : Select AX terminal function(For MC on primary side) (AX)				○	○	○
		16 (1016) : Stage transition signal for pattern operation (TU)				○	○	○
		17 (1017) : Cycle completion signal for pattern operation (TO)				○	○	○
		18 (1018) : Pattern operation stage No.1 (STG1)						
		19 (1019) : Pattern operation stage No.2 (STG2)						
		20 (1020) : Pattern operation stage No.4 (STG4)						
		22 (1022) : Inverter output limiting with delay (IOL2)				○	○	○
		25 (1025) : Cooling fan in operation (FAN)				○	○	○
		26 (1026) : Auto-resetting (TRY)				○	○	○
		28 (1028) : Heat sink overheat early warning (OH)				○	○	○
		30 (1030) : Lifetime alarm (LIFE)				○	○	○
		31 (1031) : Frequency (speed) detected 2 (FDT2)				○	○	○
		33 (1033) : Reference loss detected (REF OFF)				○	○	○
		35 (1035) : Inverter output on (RUN2)				○	○	○
		36 (1036) : Overload prevention control (OLP)				○	○	○
		37 (1037) : Current detected (ID)				○	○	○
		38 (1038) : Current detected 2 (ID2)				○	○	○
		39 (1039) : Current detected 3 (ID3)				○	○	○
		41 (1041) : Low current detected (IDL)				○	○	○
		42 (1042) : PID alarm (PID-ALM)				○	○	○
		43 (1043) : Under PID control (PID-CTL)				○	○	○
		44 (1044) : Motor stopped due to slow flowrate under PID control (PID-STP)				○	○	○
		45 (1045) : Low output torque detected (U-TL)				○	○	○
		46 (1046) : Torque detected 1 (TD1)				○	○	○
		47 (1047) : Torque detected 2 (TD2)				○	○	○
		48 (1048) : Motor 1 selected (SWM1)				○	○	○
		49 (1049) : Motor 2 selected (SWM2)				○	○	○
		50 (1050) : Motor 3 selected (SWM3)				○	○	○
		51 (1051) : Motor 4 selected (SWM4)				○	○	○
		52 (1052) : Running forward (FRUN)				○	○	○
		53 (1053) : Running reverse (RRUN)				○	○	○
		54 (1054) : In remote operation (RMT)				○	○	○
		56 (1056) : Motor overheat detected by thermistor (THM)				○	○	○
		57 (1057) : Brake signal (BRKS)				○	○	○
		58 (1058) : Frequency (speed) detected 3 (FDT3)				○	○	○
		59 (1059) : Terminal [C1] wire break (C1OFF)				○	○	○
		70 (1070) : Speed valid (DNZS)				None	○	○
		71 (1071) : Speed agreement (DSAG)				None	○	○
		72 (1072) : Frequency (speed) arrival signal 3 (FAR3)				○	○	○
		76 (1076) : PG error detected (PG-ERR)				None	○	○
		82 (1082) : Positioning completion signal (PSET)				None	None	○
		84 (1084) : Maintenance timer (MNT)				○	○	○
		98 (1098) : Light alarm (L-ALM)				○	○	○
		99 (1099) : Alarm output (for any alarm) (ALM)				○	○	○
		101 (1101) : Enable circuit failure detected (DECF)				○	○	○
		102 (1102) : Enable input OFF (EN OFF)				○	○	○
		105 (1105) : Braking transistor broken (DBAL)				○	○	○
		2001 (3001) : Output of step 1 (SO01)				○	○	○
		2002 (3002) : Output of step 2 (SO02)				○	○	○
		2003 (3003) : Output of step 3 (SO03)				○	○	○
		2004 (3004) : Output of step 4 (SO04)				○	○	○
		2005 (3005) : Output of step 5 (SO05)				○	○	○
		2006 (3006) : Output of step 6 (SO06)				○	○	○
		2007 (3007) : Output of step 7 (SO07)				○	○	○
		2008 (3008) : Output of step 8 (SO08)				○	○	○
		2009 (3009) : Output of step 9 (SO09)				○	○	○
		2010 (3010) : Output of step 10 (SO10)				○	○	○
		4001 (5001) : Terminal [X1] input signal (X1)				○	○	○
		4002 (5002) : Terminal [X2] input signal (X2)				○	○	○
		4003 (5003) : Terminal [X3] input signal (X3)				○	○	○
		4004 (5004) : Terminal [X4] input signal (X4)				○	○	○
		4005 (5005) : Terminal [X5] input signal (X5)				○	○	○
		4006 (5006) : Terminal [X6] input signal (X6)				○	○	○
		4007 (5007) : Terminal [X7] input signal (X7)				○	○	○
		4010 (5010) : Terminal [FWD] input signal (FWD)				○	○	○
		4011 (5011) : Terminal [REV] input signal (REV)				○	○	○
		6000 (7000) : Final run command (FL_RUN)				○	○	○
		6001 (7001) : Final FWD run command (FL_FWD)				○	○	○

●U codes: Application Functions 1

Code	Name	Data setting range	Change when running	Data copying	Default setting	Drive control V/f	W/O PG	W/PG
U01	Customizable Logic: (Input 1)	6002 (7002) : Final REV run command (FL_REV)	None	○	0	○	○	○
U02	Step 1 (Input 2	6003 (7003) : During acceleration (DACC) 6004 (7004) : During deceleration (DDEC) 6005 (7005) : Under anti-regenerative control (REGA) 6006 (7006) : Within dancer reference position (DR_REF) 6007 (7007) : Alarm factor presence (ALM_ACT) Setting the value in parentheses ( ) shown above assigns a negative logic output to a terminal. (True if OFF.)	None	○	0	○ ○ ○ ○ ○	○ ○ ○ ○ ○	○ ○ ○ ○ ○
U03	(Logic circuit)	0 : No function assigned 1 : Through output + General-purpose timer 2 : ANDing + General-purpose timer 3 : ORing + General-purpose timer 4 : XORing + General-purpose timer 5 : Set priority flip-flop + General-purpose timer 6 : Reset priority flip-flop + General-purpose timer 7 : Rising edge detector + General-purpose timer 8 : Failing edge detector + General-purpose timer 9 : Rising and failing edge detector + General-purpose timer 10 : Input hold + General-purpose timer 11 : Increment counter 12 : Decrement counter 13 : Timer with reset input	None	○	0	○	○	○
U04	(Type of timer)	0 : No timer 1 : On-delay timer 2 : Off-delay timer 3 : Pulses 4 : Retriggerable timer 5 : Pulse train output	None	○	0	○	○	○
U05	(Timer)	0.00 to 600.00	None	○	0.00	○	○	○
U06	Customizable Logic: (Input 1)	18 (1018) : Pattern operation stage 1 (STG1)	None	○	0	○	○	○
U07	Step 2 (Input 2)	19 (1019) : Pattern operation stage 2 (STG2)	None	○	0	○	○	○
U08	(Logic circuit)	See U03.	None	○	0	○	○	○
U09	(Type of timer)	See U04.	None	○	0	○	○	○
U10	(Timer)	See U05.	None	○	0.00	○	○	○
U11	Customizable Logic: (Input 1)	20 (1020) : Pattern operation stage 4 (STG4)	None	○	0	○	○	○
U12	Step 3 (Input 2)	29 (1029) : Synchronization completed (SY)	None	○	0	○	○	○
U13	(Logic circuit)	See U03.	None	○	0	○	○	○
U14	(Type of timer)	See U04.	None	○	0	○	○	○
U15	(Timer)	See U05.	None	○	0.00	○	○	○
U16	Customizable Logic: (Input 1)	77 (1077) : Low DC link bus voltage (U-EDC)	None	○	0	○	○	○
U17	Step 4 (Input 2)	79 (1079) : Deceleration in momentary power failure (IPF2)	None	○	0	○	○	○
U18	(Logic circuit)	See U03.	None	○	0	○	○	○
U19	(Type of timer)	See U04.	None	○	0	○	○	○
U20	(Timer)	See U05.	None	○	0.00	○	○	○
U21	Customizable Logic: (Input 1)	90 (1090) : Alarm indication 1 (AL1)	None	○	0	○	○	○
U22	Step 5 (Input 2)	91 (1091) : Alarm indication 2 (AL2)	None	○	0	○	○	○
U23	(Logic circuit)	See U03.	None	○	0	○	○	○
U24	(Type of timer)	See U04.	None	○	0	○	○	○
U25	(Timer)	See U05.	None	○	0.00	○	○	○
U26	Customizable Logic: (Input 1)	92 (1092) : Alarm indication 4 (AL4)	None	○	0	○	○	○
U27	Step 6 (Input 2)	93 (1093) : Alarm indication 8 (AL8)	None	○	0	○	○	○
U28	(Logic circuit)	See U03.	None	○	0	○	○	○
U29	(Type of timer)	See U04.	None	○	0	○	○	○
U30	(Timer)	See U05.	None	○	0.00	○	○	○
U31	Customizable Logic: (Input 1)	See U01.	None	○	0	See U01.		
U32	Step 7 (Input 2)	See U02.	None	○	0	See U02.		
U33	(Logic circuit)	See U03.	None	○	0	○	○	○
U34	(Type of timer)	See U04.	None	○	0	○	○	○
U35	(Timer)	See U05.	None	○	0.00	○	○	○
U36	Customizable Logic: (Input 1)	See U01.	None	○	0	See U01.		
U37	Step 8 (Input 2)	See U02.	None	○	0	See U02.		
U38	(Logic circuit)	See U03.	None	○	0	○	○	○
U39	(Type of timer)	See U04.	None	○	0	○	○	○
U40	(Timer)	See U05.	None	○	0.00	○	○	○
U41	Customizable Logic: (Input 1)	See U01.	None	○	0	See U01.		
U42	Step 9 (Input 2)	See U02.	None	○	0	See U02.		
U43	(Logic circuit)	See U03.	None	○	0	○		○
U44	(Type of timer)	See U04.	None	○	0	○	○	○
U45	(Timer)	See U05.	None	○	0.00	○	○	○
U46	Customizable Logic: (Input 1)	See U01.	None	○	0	See U01.		
U47	Step 10 (Input 2)	See U02.	None	○	0	See U02.		
U48	(Logic circuit)	See U03.	None	○	0	○	○	○
U49	(Type of timer)	See U04.	None	○	0	○	○	○
U50	(Timer)	See U05.	None	○	0.00	○	○	○

Function Settings

●U codes: Application Functions 1

Code	Name	Data setting range	Change when running	Data copying	Default setting	Drive control V/f	Drive control W/O PG	Drive control W/PG
U71	Customizable Logic Output Signal 1 (Output selection)	0 : Disable	None	○	0	○	○	○
		1 : Step 1 output (SO01)	None	○	0	○	○	○
U72	Customizable Logic Output Signal 2	2 : Step 2 output (SO02)	None	○	0	○	○	○
U73	Customizable Logic Output Signal 3	3 : Step 3 output (SO03)	None	○	0	○	○	○
U74	Customizable Logic Output Signal 4	4 : Step 4 output (SO04)	None	○	0	○	○	○
U75	Customizable Logic Output Signal 5	5 : Step 5 output (SO05)						
		6 : Step 6 output (SO06)						
		7 : Step 7 output (SO07)						
		8 : Step 8 output (SO08)						
		9 : Step 1 output (SO09)						
		10 : Step 10 output (SO10)						
U81	Customizable Logic Output Signal 1 (Function selection)	0 (1000) : Select multi-frequency (0 to 1 steps) (SS1)	None	○	100	○	○	○
		1 (1001) : Select multi-frequency (0 to 3 steps) (SS2)				○	○	○
U82	Customizable Logic Output Signal 2	2 (1002) : Select multi-frequency (0 to 7 steps) (SS4)	None	○	100	○	○	○
U83	Customizable Logic Output Signal 3	3 (1003) : Select multi-frequency (0 to 15 steps) (SS8)	None	○	100	○	○	○
U84	Customizable Logic Output Signal 4	4 (1004) : Select ACC/DEC time (2 steps) (RT1)	None	○	100	○	○	○
U85	Customizable Logic Output Signal 5	5 (1005) : Select ACC/DEC time (4 steps) (RT2)	None	○	100	○	○	○
		6 (1006) : Enable 3-wire operation (HLD)				○	○	○
		7 (1007) : Coast to a stop (BX)				○	○	○
		8 (1008) : Reset alarm (RST)				○	○	○
		9 (1009) : Enable external alarm trip (THR)				○	○	○
		(9 = Active OFF, 1009 = Active ON)				○	○	○
		10 (1010) : Ready for jogging (JOG)				○	○	○
		11 (1011) : Select frequency command 2/1 (Hz2/Hz1)				○	○	○
		12 (1012) : Select motor 2 (M2)				○	○	○
		13 : Enable DC braking (DCBRK)				○	○	○
		14 (1014) : Select torque limiter level 2/1 (TL2/TL1)				○	○	○
		15 : Switch to commercial power (50 Hz) (SW50)				○	○	○
		16 : Switch to commercial power (60 Hz) (SW60)				○	None	None
		17 (1017) : UP (Increase output frequency) (UP)				○	None	None
		18 (1018) : DOWN (Decrease output frequency) (DOWN)				○	○	○
		20 (1020) : Cancel PID control (Hz/PID)				○	○	○
		21 (1021) : Switch normal/inverse operation (IVS)				○	○	○
		22 (1022) : Interlock (IL)				○	○	○
		23 (1023) : Cancel torque control (Hz/TRQ)				None	None	None
		24 (1024) : Enable communications link via RS-485 or fieldbus (LE)				○	○	○
		25 (1025) : Universal DI (U-DI)				○	○	○
		26 (1026) : Enable auto search for idling motor speed at starting (STM)				○	○	None
		30 (1030) : Force to stop (STOP)				○	○	○
		(30 = Active OFF, 1030 = Active ON)				○	○	○
		32 (1032) : Pre-excitation (EXITE)				None	○	○
		33 (1033) : Reset PID integral and differential components (PID-RST)				○	○	○
		34 (1034) : Hold PID integral component (PID-HLD)				○	○	○
		35 (1035) : Select local (keypad) operation (LOC)				○	○	○
		36 (1036) : Select motor 3 (M3)				○	○	○
		37 (1037) : Select motor 4 (M4)				○	○	○
		39 : Protect motor from dew condensation (DWP)				○	○	○
		40 : Enable integrated sequence to switch to commercial power(50 Hz) (ISW50)				○	None	None
		41 : Enable integrated sequence to switch to commercial power(60 Hz) (ISW60)				○	None	None
		47 (1047) : Servo-lock command (LOCK)				None	None	○
		49 (1049) : Pulse train sign (SIGN)				○	○	○
		59 (1059) : Enable battery operation (BATRY)				○	○	○
		70 (1070) : Cancel constant peripheral speed control (Hz/LSC)				○	○	○
		71 (1071) : Hold the constant peripheral speed control frequency in the memory (LSC-HLD)				○	○	○
		72 (1072) : Count the run time of commercial power-driven motor 1 (CRUN-M1)				○	None	None
		73 (1073) : Count the run time of commercial power-driven motor 2 (CRUN-M2)				○	None	None
		74 (1074) : Count the run time of commercial power-driven motor 3 (CRUN-M3)				○	None	None
		75 (1075) : Count the run time of commercial power-driven motor 4 (CRUN-M4)				○	None	None
		76 (1076) : Select droop control (DROOP)				○	○	○
		77 (1077) : Cancel PG alarm (PG-CCL)				None	None	○
		81 (1081) : Clear all customizable logic timers (CLTC)				○	○	○
		98 : Run forward (FWD)				○	○	○
		99 : Run reverse (REV)				○	○	○
		100 : No function assigned (NONE)				○	○	○
		110(1110): Servo lock gain selection (SLG2)				None	None	○
		111(1111): Force to stop only by terminal (STOP-T)				○	○	○
		(111 = Active OFF, 1111 = Active ON)						
		Setting the value of 1000s in parentheses ( ) shown above assigns a negative logic input to a terminal.						
U91	Customizable Logic Timer Monitor (Step selection)	1 : Step 1	None	○	1	○	○	○
		2 : Step 2						
		3 : Step 3						
		4 : Step 4						
		5 : Step 5						
		6 : Step 6						
		7 : Step 7						
		8 : Step 8						
		9 : Step 9						
		10 : Step 10						

●y codes: LINK Functions

Code	Name	Data setting range	Change when running	Data copying	Default setting	Drive control V/f	W/O PG	W/PG
y01	RS-485 Communication 1 (Station address)	1 to 255	None	○	1	○	○	○
y02	(Communications error processing)	0 : Immediately trip with alarm Er8 1 : Trip with alarm Er8 after running for the period specified by timer y03 2 : Retry during the period specified by timer y03. If the retry fails, trip with alarm Er8. If it succeeds, continue to run. 3 : Continue to run	○	○	0	○	○	○
y03	(Timer)	0.0 to 60.0 s	○	○	2.0	○	○	○
y04	(Baud rate)	0 : 2400 bps 1 : 4800 bps 2 : 9600 bps 3 : 19200 bps 4 : 38400 bps	○	○	3	○	○	○
y05	(Data length)	0 : 8 bits 1 : 7 bits	○	○	0	○	○	○
y06	(Parity bits check)	0 : None (2 stop bits) 1 : Even parity (1 stop bit) 2 : Odd parity (1 stop bit) 3 : None (1 stop bit)	○	○	0	○	○	○
y07	(Stop bits)	0 : 2 bits 1 : 1 bit	○	○	0	○	○	○
y08	(No-response error detection time)	0 : No detection; 1 to 60 s	○	○	0	○	○	○
y09	(Response interval)	0.00 to 1.00 s	○	○	0.01	○	○	○
y10	(Protocol selection)	0 : Modbus RTU protocol 1 : FRENIC Loader protocol (SX protocol) 2 : Fuji general-purpose inverter protocol	○	○	1	○	○	○
y11	RS-485 Communication 2 (Station address)	1 to 255	None	○	1	○	○	○
y12	(Communications error processing)	0 : Immediately trip with alarm ErP 1 : Trip with alarm ErP after running for the period specified by timer y13 2 : Retry during the period specified by timer y13. If the retry fails, trip with alarm ErP. If it succeeds, continue to run. 3 : Continue to run	○	○	0	○	○	○
y13	(Timer)	0.0 to 60.0 s	○	○	2.0	○	○	○
y14	(Baud rate)	0 : 2400 bps 1 : 4800 bps 2 : 9600 bps 3 : 19200 bps 4 : 38400 bps	○	○	3	○	○	○
y15	(Data length)	0 : 8 bits 1 : 7 bits	○	○	0	○	○	○
y16	(Parity check)	0 : None (2 stop bits) 1 : Even parity (1 stop bit) 2 : Odd parity (1 stop bit) 3 : None (1 stop bit)	○	○	0	○	○	○
y17	(Stop bits)	0 : 2 bits 1 : 1 bit	○	○	0	○	○	○
y18	(No-response error detection time)	0 : No detection; 1 to 60 s	○	○	0	○	○	○
y19	(Response interval)	0.00 to 1.00 s	○	○	0.01	○	○	○
y20	(Protocol selection)	0 : Modbus RTU protocol 1 : FRENIC Loader protocol (SX protocol) 2 : Fuji general-purpose inverter protocol	○	○	0	○	○	○
y96	Reserved	0 or 1	○	○	0*13	—	—	—
y97	Communication Data Storage Selection	0 : Save into nonvolatile storage (Rewritable times limited) 1 : Write into temporary storage (Rewritable times unlimited) 2 : Save all data from temporary storage to nonvolatile one(After saving data, the data automatically returns to "1.")	○	○	0	○	○	○
y98	Bus Link Function (Mode selection)	Frequency command / Run command 0 : Follow H30 data / Follow H30 data 1 : Via fieldbus option / Follow H30 data 2 : Follow H30 data / Via fieldbus option 3 : Via fieldbus option / Via fieldbus option	○	○	0	○	○	○
y99	Loader Link Function (Mode selection)	Frequency command / Run command 0 : Follow H30 and y98 data / Follow H30 and y98 data 1 : Via RS-485 link (FRENIC Loader) / Follow H30 and y98 data 2 : Follow H30 and y98 data / Via RS-485 link (FRENIC Loader) 3 : Via RS-485 link (FRENIC Loader) / Via RS-485 link (FRENIC Loader)	○	None	0	○	○	○

*13 These function codes are reserved for particular manufacturers. Unless otherwise specified, do not access these function codes.

<Data change, reflection and strage>

None: Not available ○: After changing data with using ∧∨ keys, execute and save data by pressing key,

◎ After changing and executing data with using ∧∨ keys, save the data by pressing key.

Data copy

○	Data copy is enabled.
△1	Data copy is not enabled if the inverter capacities vary.
△2	Data copy is not enabled if the voltage classes vary.
None	Data copy is not enabled.

External Dimensions (Basic Type, EMC Filter Built-in Type)

●Inverter main body

Fig.A [Unit:mm]

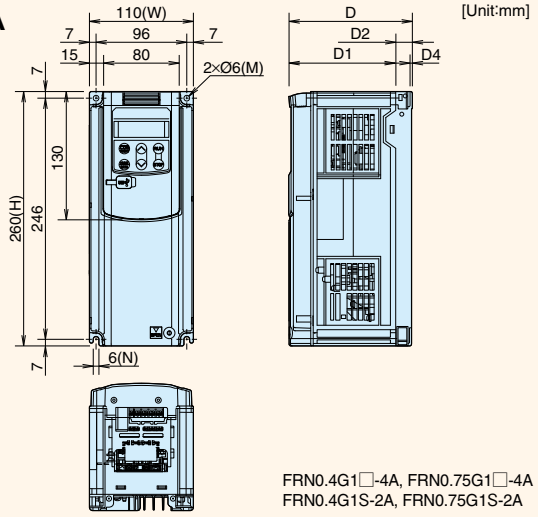

FRN0.4G1□-4A, FRN0.75G1□-4A
FRN0.4G1S-2A, FRN0.75G1S-2A

Fig.B [Unit:mm]

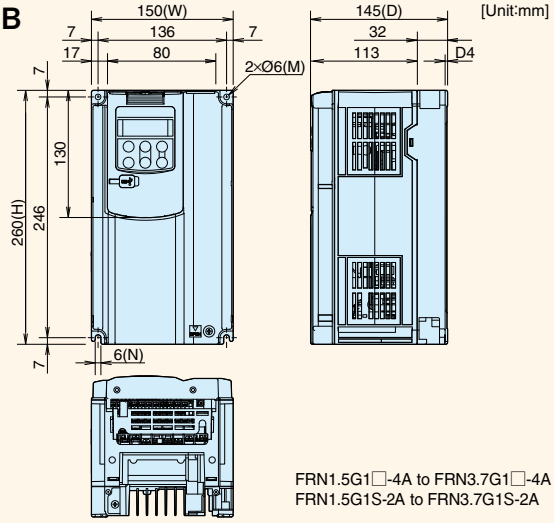

FRN1.5G1□-4A to FRN3.7G1□-4A
FRN1.5G1S-2A to FRN3.7G1S-2A

Fig.C [Unit:mm]

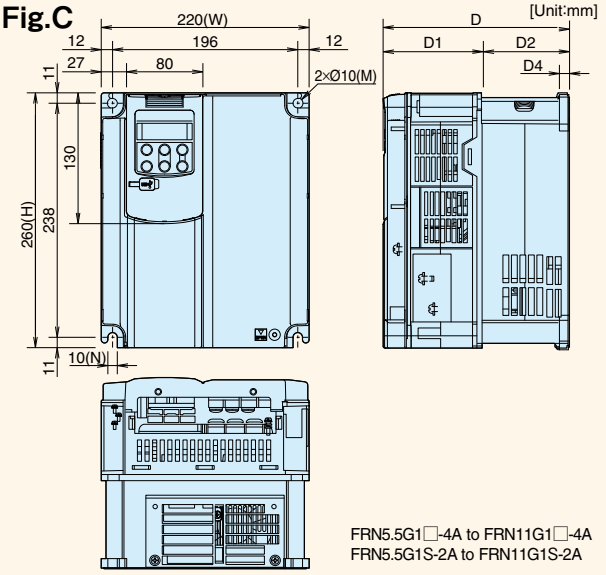

FRN5.5G1□-4A to FRN11G1□-4A
FRN5.5G1S-2A to FRN11G1S-2A

Fig.D [Unit:mm]

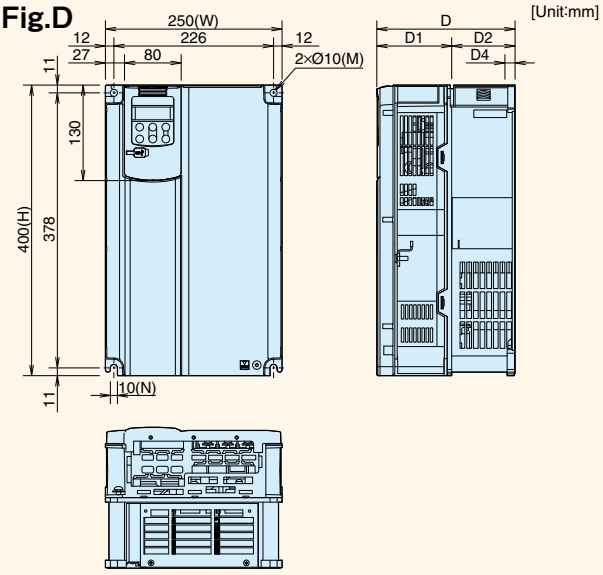

Fig.E [Unit:mm]

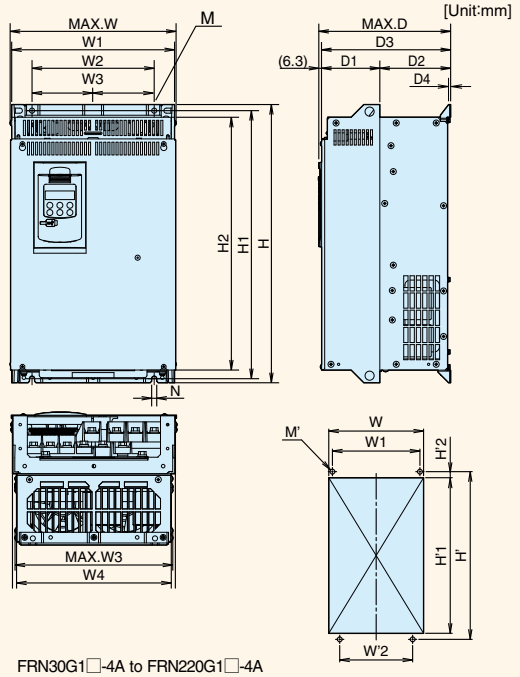

FRN30G1□-4A to FRN220G1□-4A
FRN30G1S-2A to FRN55G1S-2A

Panel Cut out

Fig.F [Unit:mm]

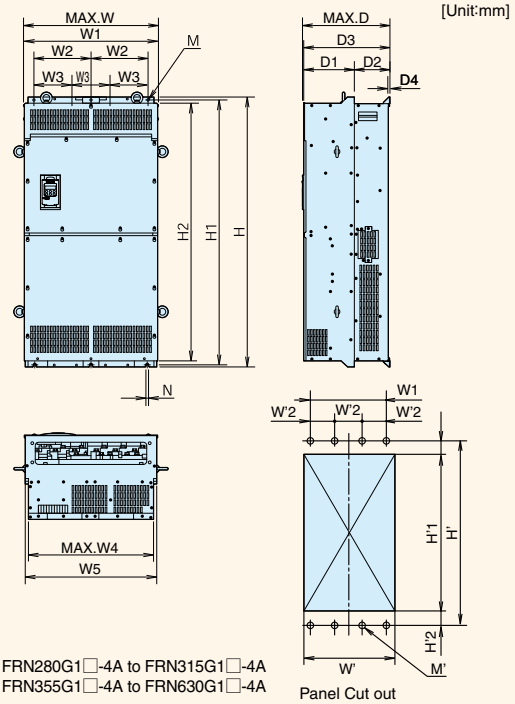

FRN280G1□-4A to FRN315G1□-4A
FRN355G1□-4A to FRN630G1□-4A

Panel Cut out

●Inverter main body

■Basic type, EMC filter built-in type

Power supply voltage	Inverter type	Fig	Main body external dimensions (mm)																Panel cutout dimensions (mm)						
			W	W1	W2	W3	W4	W5	H	H1	H2	D	D1	D2	D3	D4	M	N	W'	W' 1	W' 2	H'	H' 1	H'2	M'
3-phase 400V	FRN0.4G1□-4A	A	110	–	–	–	–	–	260	–	–	132	113	19	–	5	2xØ6	6	–	–	–	–	–	–	–
	FRN0.75G1□-4A	A																							
	FRN1.5G1□-4A	B	150									145		32	–	3									
	FRN2.2G1□-4A	B																							
	FRN3.7G1□-4A	B																							
	FRN5.5G1□-4A	C	220									195	105	90	–	10	2xØ10	10							
	FRN7.5G1□-4A	C																							
	FRN11G1□-4A	C																							
	FRN15G1□-4A	D	250						400						–	10									
	FRN18.5G1□-4A	D																							
	FRN22G1□-4A	D																							
	FRN30G1□-4A	E	326.2	320	240		310.2	304	550	530	500	261.3	115	140	255	4	2xØ10	10	312	288	240	530	512	9	4xM8
	FRN37G1□-4A	E							615	595	565								347	323	275	595	577		
	FRN45G1□-4A	E	361.2	355	275		345.2	339	675	655	625	276.3		155	270	4						655	637		
	FRN55G1□-4A	E								720	690									275	–	720	702		
	FRN75G1□-4A	E							740	710	678.7	321.3	135	180	315	4	2xØ15	15	510	430	430	710	685	12.5	4xM12
	FRN90G1□-4A	E	536.4	530	430		506.4	500.6																	
	FRN110G1□-4A	E																							
	FRN132G1□-4A	E							1000	970	939.5	366.3	180		360	4						970	945		
	FRN160G1□-4A	E																							
	FRN200G1□-4A	E	686.4	680	–	290	656.4	650.6									3xØ15		660	580	580				6xM12
	FRN220G1□-4A	E																							
	FRN280G1□-4A	F			290	–	659	653	1400	1370	1330	445.5	260		440	6.4			664		290	1370	1348	11	
	FRN315G1□-4A	F																							
	FRN355G1□-4A	F	886.4	880	–	260	859.1	853				446.3				6.4	4xØ15		864	780	260				8xM12
	FRN400G1□-4A	F																							
	FRN500G1□-4A	F	1006	1000		300	972	966	1550	1520	1480	505.9	313.2	186.8	500	6.4			980	900	300	1520	1490	14.5	
	FRN630G1□-4A	F																							
3-phase 200V	FRN0.4G1S-2A	A	110	–	–	–	–	–	260	–	–	132	113	19	–	5	2xØ6	6	–	–	–	–	–	–	–
	FRN0.75G1S-2A	A																							
	FRN1.5G1S-2A	B	150									145		32	–	3									
	FRN2.2G1S-2A	B																							
	FRN3.7G1S-2A	B																							
	FRN5.5G1S-2A	C	220									195	105	90	–	10	2xØ10	10							
	FRN7.5G1S-2A	C																							
	FRN11G1S-2A	C																							
	FRN15G1S-2A	D	250						400						–										
	FRN18.5G1S-2A	D																							
	FRN22G1S-2A	D																							
	FRN30G1S-2A	E	326.2	320	240		310.2	304	550	530	500	261.3	115	140	255	4	2xØ10	10	312	288	240	530	512	9	4xM8
	FRN37G1S-2A	E							615	595	565								347	323	275	595	577		
	FRN45G1S-2A	E	361.2	355	275		345.2	339	740	720	690	276.3		155	270	4				275	–	720	702		
	FRN55G1S-2A	E																							
	FRN75G1S-2A	E	535.8	530	430		506.4	500.6	750		688.7	291.3	145	145	285	4	2xØ15	15	510	430	430		695	12.5	4xM12
	FRN90G1S-2A	E	686.4	680	–	290	656.4	650.6	880	850	819.5	366.3	180	180	360	4	3xØ15		660	580	580	850	825		6xM12

□:S:Standard type, E:EMC filter built-in type

■Keypad (Optional)

●Keypad (with USB connector model) TP-E1U

[Unit:mm]

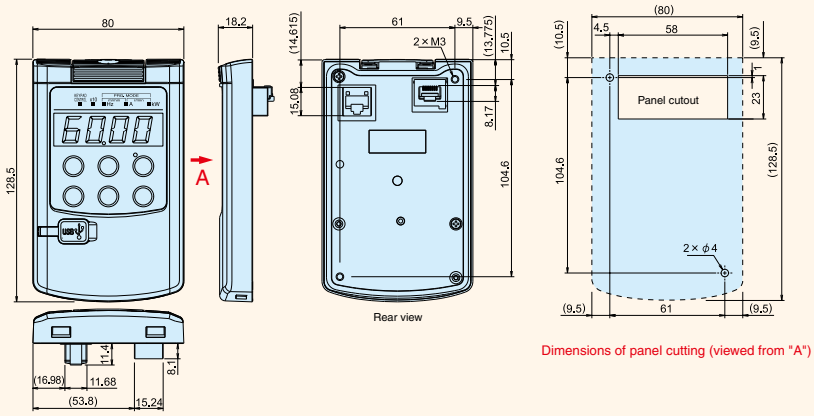

Dimensions of panel cutting (viewed from "A")

●Keypad (Multi-function model) TP-G1-J1

[Unit:mm]

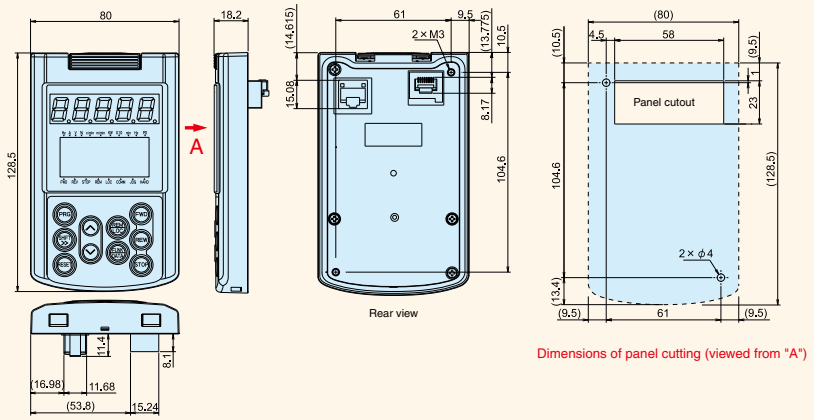

Dimensions of panel cutting (viewed from "A")

DC REACTOR

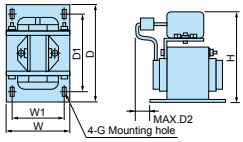

Fig.A

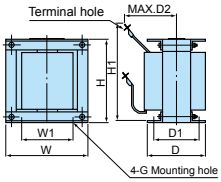

Fig.B

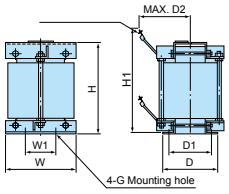

Fig.C

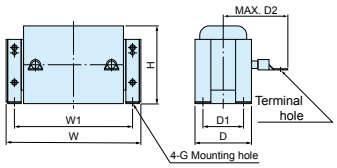

Fig.D

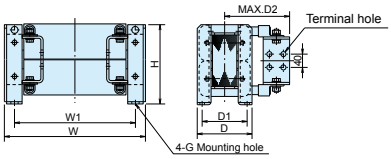

Fig.E

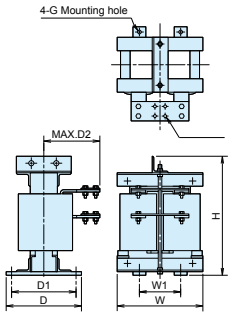

Fig.F

Power supply voltage	Nominal applied motor (kW)	Inverter type	HD/LD	DC reactor type	Figure	Dimensions (mm)									Mass (kg)
						W	W1	D	D1	D2	D3	H	Mounting hole	Terminal hole	
Three-phase 200V	0.4	FRN0.4G1S-2A	HD	DCR2-0.4	A	66	56	90	72	15	-	94	5.2×8	M4	1.0
	0.75	FRN0.75G1S-2A		DCR2-0.75	A	66	56	90	72	20	-	94	5.2×8	M4	1.4
	1.5	FRN1.5G1S-2A		DCR2-1.5	A	66	56	90	72	20	-	94	5.2×8	M4	1.6
	2.2	FRN2.2G1S-2A		DCR2-2.2	A	86	71	100	80	10	-	110	6×11	M4	1.8
	3.7	FRN3.7G1S-2A		DCR2-3.7	A	86	71	100	80	20	-	110	6×11	M4	2.6
	5.5	FRN5.5G1S-2A	HD	DCR2-5.5	A	111	95	100	80	20	-	130	7×11	M5	3.6
	7.5		LD	DCR2-7.5	A	111	95	100	80	23	-	130	7×11	M5	3.8
		FRN7.5G1S-2A	HD												
	11		LD	DCR2-11	A	111	95	100	80	24	-	137	7×11	M6	4.3
		FRN11G1S-2A	HD												
	15		LD	DCR2-15	A	146	124	120	96	15	-	180	7×11	M6	5.9
		FRN15G1S-2A	HD												
	18.5		LD	DCR2-18.5	A	146	124	120	96	D2	-	180	7×11	M8	7.4
		FRN18.5G1S-2A	HD												
	22		LD	DCR2-22A	A	146	124	120	96	25	-	180	7×11	M8	7.5
		FRN22G1S-2A	HD												
	30		LD	DCR2-30B	B	152±3	90±1	156±3	116±2	115	78±5	130	8	M8	12
		FRN30G1S-2A	HD												
	37		LD	DCR2-37C	B	171±3	110±1	151±3	110±2	115	75±5	150	8	M8	14
		FRN37G1S-2A	HD												
	45		LD	DCR2-45C	B	171±3	110±1	166±3	125±2	120	86±5	150	8	M10	16
		FRN45G1S-2A	HD												
	55		LD	DCR2-55C	C	190±3	160±1	131±3	90±2	100	65±5	210	8	M12	16
		FRN55G1S-2A	HD												
	75		LD	DCR2-75C	D	255±10	225	106±2	86	145	53±1	145	M6	M12	11.4
		FRN75G1S-2A	HD												
	90		LD	DCR2-90C	D	255±10	225	116±2	96	155	58±1	145	M6	M12	14
		FRN90G1S-2A	HD												
	110		LD	DCR2-110C	D	300±10	265	116±4	90	185	58±1	160	M8	M12	17

DC REACTOR

Power supply voltage	Nominal applied motor (kW)	Inverter type	HD/LD	DC reactor type	Figure	Dimensions (mm)									Mass (kg)
						W	W1	D	D1	D2	D3	H	Mounting hole	Terminal hole	
Three-phase 400V	0.4	FRN0.4G1□-4A	HD	DCR4-0.4	A	66	56	90	72	15	-	94	5.2x8	M4	1.0
	0.75	FRN0.75G1□-4A		DCR4-0.75	A	66	56	90	72	20	-	94	5.2x8	M4	1.4
	1.5	FRN1.5G1□-4A		DCR4-1.5	A	66	56	90	72	20	-	94	5.2x8	M4	1.6
	2.2	FRN2.2G1□-4A		DCR4-2.2	A	86	71	100	80	15	-	110	6x9	M4	2
	3.7	FRN3.7G1□-4A		DCR4-3.7	A	86	71	100	80	20	-	110	6x9	M4	2.6
	5.5	FRN5.5G1□-4A	HD	DCR4-5.5	A	86	71	100	80	20	-	110	6x9	M4	2.6
	7.5		LD	DCR4-7.5	A	111	95	100	80	24	-	130	7x11	M5	4.2
		FRN7.5G1□-4A	HD												
	11		LD	DCR4-11	A	111	95	100	80	24	-	130	7x11	M5	4.3
		FRN11G1□-4A	HD												
	15		LD	DCR4-15	A	146	124	120	96	15	-	171	7x11	M5	5.9
		FRN15G1□-4A	HD												
	18.5		LD	DCR4-18.5	A	146	124	120	96	25	-	171	7x11	M6	7.2
		FRN18.5G1□-4A	HD												
	22		LD	DCR4-22A	A	146	124	120	96	25	-	171	7x11	M6	7.2
		FRN22G1□-4A	HD												
	30		LD	DCR4-30B	B	152±3	90±1	157±3	115±2	100	78±5	130	8	M8	13
		FRN30G1□-4A	HD												
	37		LD	DCR4-37C	B	171±3	110±1	151±3	110±2	100	75±5	150	8	M8	15
		FRN37G1□-4A	HD												
	45		LD	DCR4-45C	B	171±3	110±1	165±4	125±2	110	82±5	150	8	M8	18
		FRN45G1□-4A	HD												
	55		LD	DCR4-55C	B	171±3	110±1	170±3	130±2	110	82±5	150	8	M8	20
		FRN55G1□-4A	HD												
	75		LD	DCR4-75C	D	255±10	225	106±2	86	125	53±1	145	6	M10	12.4
		FRN75G1□-4A	HD												
	90		LD	DCR4-90C	D	255±10	225	116±2	96	140	58±1	145	M6	M12	14.7
		FRN90G1□-4A	HD												
	110		LD	DCR4-110C	D	300±10	265	116±2	90	175	58±1	155	M8	M12	18.4
		FRN110G1□-4A	HD												
	132		LD	DCR4-132C	D	300±10	265	126±4	100	180	63±2	160	M8	M12	22
		FRN132G1□-4A	HD												
	160		LD	DCR4-160C	D	350±10	310	131±4	103	180	65.5±2	190	M10	M12	25.5
		FRN160G1□-4A	HD												
	200		LD	DCR4-200C	D	350±10	310	141±4	113	185	70.5±2	190	M10	M12	29.5
		FRN200G1□-4A	HD												
	220		LD	DCR4-220C	D	350±10	310	146±4	118	200	73±1	190	M10	M12	32.5
		FRN220G1□-4A	HD												
	280		LD	DCR4-280C	E	350±10	310	161±4	133	210	80.5±2	190	M10	M16	36
		FRN280G1□-4A	HD												
	355		LD	DCR4-355C	E	400±10	345	156±4	128	200	78±1	225	M10	ϕ15	47
	315	FRN315G1□-4A	HD	DCR4-315C	E	400±10	345	146±4	118	200	73±1	225	M10	M16	40
	400		LD	DCR4-400C	E	455±10	385	145±4	117	213	72.5±1	245	M10	ϕ15	52
	355	FRN355G1□-4A	HD	DCR4-355C	E	400±10	345	156±4	128	200	78±1	225	M10	ϕ15	47
	450		LD	DCR4-450C	E	440±10	385	150±4	122	215	75±2	245	M10	ϕ15	60
	400	FRN400G1□-4A	HD	DCR4-400C	E	455±10	385	145±4	117	213	72.5±1	245	M10	ϕ15	52
	500		LD	DCR4-500C	E	445±10	390	165±3	137	220	82.5±2	245	M10	ϕ15	70
		FRN500G1□-4A	HD												
	630		LD	DCR4-630C	F	285±10	145	203±4	170	195	104±2	480	M12	ϕ15	75
		FRN630G1□-4A	HD												
	710		LD	DCR4-710C	F	340±10	160	295±4	255	225	107±2	480	M12	ϕ15	95

Note: A box (□) in the above table replaces S (Basic type) or E (EMC filter built-in type) depending on the enclosure.

Braking unit and braking resistor (standard item)

HD mode

Power supply voltage	Nominal applied motor (kW)	Inverter type HD mode	Option: Braking unit Type	Braking unit Q'ty	Braking resistor Type	Braking resistor Q'ty
Three-phase 200V	0.4	FRN0.4G1S-2A	–		DB0.75-2	1
	0.75	FRN0.75G1S-2A				
	1.5	FRN1.5G1S-2A			DB2.2-2	1
	2.2	FRN2.2G1S-2A				
	3.7	FRN3.7G1S-2A			DB3.7-2	1
	5.5	FRN5.5G1S-2A			DB5.5-2	1
	7.5	FRN7.5G1S-2A			DB7.5-2	1
	11	FRN11G1S-2A			DB11-2	1
	15	FRN15G1S-2A			DB15-2	1
	18.5	FRN18.5G1S-2A			DB18.5-2	1
	22	FRN22G1S-2A			DB22-2	1
	30	FRN30G1S-2A	BU37-2C	1	DB30-2C	1
	37	FRN37G1S-2A			DB37-2C	1
	45	FRN45G1S-2A	BU55-2C	1	DB45-2C	1
	55	FRN55G1S-2A			DB55-2C	1
	75	FRN75G1S-2A	BU90-2C	1	DB75-2C	1
	90	FRN90G1S-2A			DB110-2C	1
Three-phase 400V	0.4	FRN0.4G1□-4A	–		DB0.75-4	1
	0.75	FRN0.75G1□-4A				
	1.5	FRN1.5G1□-4A			DB2.2-4	1
	2.2	FRN2.2G1□-4A				
	3.7	FRN3.7G1□-4A			DB3.7-4	1
	5.5	FRN5.5G1□-4A			DB5.5-4	1
	7.5	FRN7.5G1□-4A			DB7.5-4	1
	11	FRN11G1□-4A			DB11-4	1
	15	FRN15G1□-4A			DB15-4	1
	18.5	FRN18.5G1□-4A			DB18.5-4	1
	22	FRN22G1□-4A			DB22-4	1
	30	FRN30G1□-4A	BU37-4C	1	DB30-4C	1
	37	FRN37G1□-4A			DB37-4C	1
	45	FRN45G1□-4A	BU55-4C	1	DB45-4C	1
	55	FRN55G1□-4A			DB55-4C	1
	75	FRN75G1□-4A	BU90-4C	1	DB75-4C	1
	90	FRN90G1□-4A			DB110-4C	1
	110	FRN110G1□-4A	BU132-4C	1		
	132	FRN132G1□-4A			DB135-4C	1
	160	FRN160G1□-4A	BU220-4C	1	DB160-4C	1
	200	FRN200G1□-4A			DB200-4C	1
	220	FRN220G1□-4A			DB220-4C	1
	280	FRN280G1□-4A		2	DB160-4C	2
	315	FRN315G1□-4A				
	355	FRN355G1□-4A			DB200-4C	
	400	FRN400G1□-4A				
	500	FRN500G1□-4A		3		3
	630	FRN630G1□-4A			DB220-4C	

Note: A box (□) in the above table replaces S (Basic type) or E (EMC filter built-in type) depending on the enclosure.

LD mode

Power supply voltage	Nominal applied motor (kW)	Inverter type LD mode	Option: Braking unit Type	Braking unit Q'ty	Braking resistor Type	Braking resistor Q'ty
Three-phase 200V	7.5	FRN5.5G1S-2A	–		DB5.5-2	1
	11	FRN7.5G1S-2A			DB7.5-2	1
	15	FRN11G1S-2A			DB11-4	1
	18.5	FRN15G1S-2A			DB15-2	1
	22	FRN18.5G1S-2A			DB18.5-2	1
	30	FRN22G1S-2A			DB22-2	1
	37	FRN30G1S-2A	BU37-2C	1	DB30-2C	1
	45	FRN37G1S-2A			DB37-2C	1
	55	FRN45G1S-2A	BU55-2C	1	DB45-2C	1
	75	FRN55G1S-2A			DB55-2C	1
	90	FRN75G1S-2A	BU90-2C	1	DB75-2C	1
	110	FRN90G1S-2A			DB110-2C	1
Three-phase 400V	7.5	FRN5.5G1□-4A	–		DB5.5-4	1
	11	FRN7.5G1□-4A			DB7.5-4	1
	15	FRN11G1□-4A			DB11-4	1
	18.5	FRN15G1□-4A			DB15-4	1
	22	FRN18.5G1□-4A			DB18.5-4	1
	30	FRN22G1□-4A			DB30-4C	1
	37	FRN30G1□-4A	BU37-4C	1		
	45	FRN37G1□-4A			DB37-4C	1
	55	FRN45G1□-4A	BU55-4C	1	DB45-4C	1
	75	FRN55G1□-4A			DB55-4C	1
	90	FRN75G1□-4A	BU90-4C	1	DB75-4C	1
	110	FRN90G1□-4A			DB110-4C	1
	132	FRN110G1□-4A	BU132-4C	1		
	160	FRN132G1□-4A			DB132-4C	1
	200	FRN160G1□-4A	BU220-4C	1	DB160-4C	1
	220	FRN200G1□-4A			DB200-4C	1
	280	FRN220G1□-4A			DB220-4C	1
	355	FRN280G1□-4A		2	DB160-4C	2
	400	FRN315G1□-4A				
	450	FRN355G1□-4A			DB200-4C	
	500	FRN400G1□-4A				
	630	FRN500G1□-4A		3		3
	710	FRN630G1□-4A			DB220-4C	

Note: A box (□) in the above table replaces S (Basic type) or E (EMC filter built-in type) depending on the enclosure.

Warranty

To all our customers who purchase Fuji Electric products included in this catalog:

Please take the following items into consideration when placing your order.

When requesting an estimate and placing your orders for the products included in these materials, please be aware that any items such as specifications which are not specifically mentioned in the contract, catalog, specifications or other materials will be as mentioned below.
In addition, the products included in these materials are limited in the use they are put to and the place where they can be used, etc., and may require periodic inspection. Please confirm these points with your sales representative or directly with this company.
Furthermore, regarding purchased products and delivered products, we request that you take adequate consideration of the necessity of rapid receiving inspections and of product management and maintenance even before receiving your products.

1. Free of Charge Warranty Period and Warranty Range

1-1 Free of charge warranty period

(1) The product warranty period is "1 year from the date of purchase" or 24 months from the manufacturing date imprinted on the name place, whichever date is earlier.
(2) However, in cases where the operating environment, conditions of use, use frequency and times used, etc., have an effect on product life, this warranty period may not apply.
(3) Furthermore, the warranty period for parts restored by Fuji Electric's Service Department is "6 months from the date that repairs are completed."

1-2 Warranty range

(1) In the event that breakdown occurs during the product's warranty period which is the responsibility of Fuji Electric, Fuji Electric will replace or repair the part of the product that has broken down free of charge at the place where the product was purchased or where it was delivered. However, if the following cases are applicable, the terms of this warranty may not apply.

1) The breakdown was caused by inappropriate conditions, environment, handling or use methods, etc. which are not specified in the catalog, operation manual, specifications or other relevant documents.
2) The breakdown was caused by the product other than the purchased or delivered Fuji's product.
3) The breakdown was caused by the product other than Fuji's product, such as the customer's equipment or software design, etc.
4) Concerning the Fuji's programmable products, the breakdown was caused by a program other than a program supplied by this company, or the results from using such a program.
5) The breakdown was caused by modifications or repairs affected by a party other than Fuji Electric.
6) The breakdown was caused by improper maintenance or replacement using consumables, etc. specified in the operation manual or catalog, etc.
7) The breakdown was caused by a chemical or technical problem that was not foreseen when making practical application of the product at the time it was purchased or delivered.
8) The product was not used in the manner the product was originally intended to be used.
9) The breakdown was caused by a reason which is not this company's responsibility, such as lightning or other disaster.

(2) Furthermore, the warranty specified herein shall be limited to the purchased or delivered product alone.
(3) The upper limit for the warranty range shall be as specified in item (1) above and any damages (damage to or loss of machinery or equipment, or lost profits from the same, etc.) consequent to or resulting from breakdown of the purchased or delivered product shall be excluded from coverage by this warranty.

1-3. Trouble diagnosis

As a rule, the customer is requested to carry out a preliminary trouble diagnosis. However, at the customer's request, this company or its service network can perform the trouble diagnosis on a chargeable basis. In this case, the customer is asked to assume the burden for charges levied in accordance with this company's fee schedule.

2. Exclusion of Liability for Loss of Opportunity, etc.

Regardless of whether a breakdown occurs during or after the free of charge warranty period, this company shall not be liable for any loss of opportunity, loss of profits, or damages arising from special circumstances, secondary damages, accident compensation to another company, or damages to products other than this company's products, whether foreseen or not by this company, which this company is not be responsible for causing.

3. Repair Period after Production Stop, Spare Parts Supply Period (Holding Period)

Concerning models (products) which have gone out of production, this company will perform repairs for a period of 7 years after production stop, counting from the month and year when the production stop occurs. In addition, we will continue to supply the spare parts required for repairs for a period of 7 years, counting from the month and year when the production stop occurs. However, it is estimated that the life cycle of certain electronic and other parts is short and it will be difficult to procure or produce those parts, so there may be cases where it is difficult to provide repairs or supply spare parts even within this 7-year period. For details, please confirm at our company's business office or our service office.

4. Transfer Rights

In the case of standard products which do not include settings or adjustments in an application program, the products shall be transported to and transferred to the customer and this company shall not be responsible for local adjustments or trial operation.

5. Service Contents

The cost of purchased and delivered products does not include the cost of dispatching engineers or service costs. Depending on the request, these can be discussed separately.

6. Applicable Scope of Service

Above contents shall be assumed to apply to transactions and use of the country where you purchased the products. Consult the local supplier or Fuji for the detail separately.

■Variation

●The rich lineup of the active Fuji inverter family

Applications	Series Name (Catalog No.)	Features
General Industrial equipment	FRENIC-Mini(C2) (24A1-E-0011)	**Compact inverter** (Three-phase 200V: 0.1 to 15kW, Three-phase 400V: 0.4 to 15kW, Single-phase 200V: 0.1 to 2.2kW, Single-phase 100V: 0.1 to 0.75kW) ● A frequency setting device is stadard-equipped, making operation simple. ● Dynamic torque vector control system is known for its top-of-the line performance, delivering stabile torque output even at low speeds. ● Use of sensorless synchronous motor control together with the motor can reduce energy consumption.
	FRENIC-Ace (24A1-E-0042)	**High Performance Inverter** (Three-phase 400V: 0.75 to 315kW, Three-phase 200V: 0.1 to 22kW, Single-phase 200V: 0.1 to 2.2kW) ● Customizable logic function is available as a standard feature. ● Readily available interface cards and various types of fieldbus / network to maximaize its flexibility. ● Wide variety of functions as a standard feature (Synchronous motor with sensorless vector control, Sensorless dynamic torque vector control, Functional safety (STO, SIL3), and more)
	FRENIC-MEGA (24A1-E-0084) (MEH655 for EN)	**High-performance, multi-functional inverter** (Three-phase 200V: 0.4 to 90kW, Three-phase 400V: 0.4 to 630kW) ● Loaded with vector control which is the peak of general purpose inverters. ● Prepared three types; the basic type, EMC filter built-in type. ● Maintainability is further improved with built-in USB port (option). ● The short-time acceleration and deceleration become enabled with achieving better rating of overload ratings at HD spec: 200% for 3 sec and 150% for 1 min and at LD spec: 120% for 1 min.
	FRENIC-VG (24A1-E-0002)	**High performance, vector control inverter** (Three-phase 200V: 0.75 to 90kW, Three-phase 400V: 3.7 to 630kW (Unite type)) ● Fuji has concentrated its technologies to deliver the best performing inverter on the market. ● FRENIC-VG is provided with Vector control with speed sensor, Speed sensorless vector control, and V/f control. ● Improved easier maintenance by the trace back memory and calendar. ● The functional safety (FS) function STO that conforms to the FS standard EN 61800-5-2 is incorporated as standard.
	FRENIC-eHVAC (24A1-E-0097)	**Low Voltage AC Drivers for HVAC apprications (for variable torque load)** (Three-phase 400V: 0.75 and 280kW) ● EMC filter built-in as a standard type. ● Developed exclusively for controlling variable torque load like fans and pumps. ● Full of new functions such as auto energy saving, PID control, life warning, and switching sequence to the commercial power supply. ● Ideal for air conditioners, fans, pumps, etc. which were difficult to use with conventional general-purpose inverters because of cost or functions.
	FRENIC-HVAC (24A1-E-0012)	**Low Voltage AC Drives for HVAC applications** (Three-phase 400V: 0.75 to 710kW) ● EMC filter built-in as a standard type. ● Enclosure IP21/IP55 can be selected between 0.75 and 90kW ● Functions suitable for HVAC uses. (Linearization function, Welt-Bulb temperature Presumption control, Filter clogging prevention function, and more)
	FRENIC-AQUA (24A1-E-0013)	**Low Voltage AC Drives for water, wastewater & irrigation applications** (Three-phase 400V: 0.75 to 710kW) ● EMC filter built-in as a standard type. ● Protective structure IP21 or IP55 can be selected between 0.75 and 90kW. ● Dedicated pump control function provided as standard. (Cascade control, Mutual operation, Customizable logic function, Slow flowrate function, and more)

Reference material

■Reference material

●Operation at low noise with consistency

The inverter can operate continuously at 16 kHz carrier frequency delivering rated current.
Thus the operation at lower noise can be achieved compared to competitors.

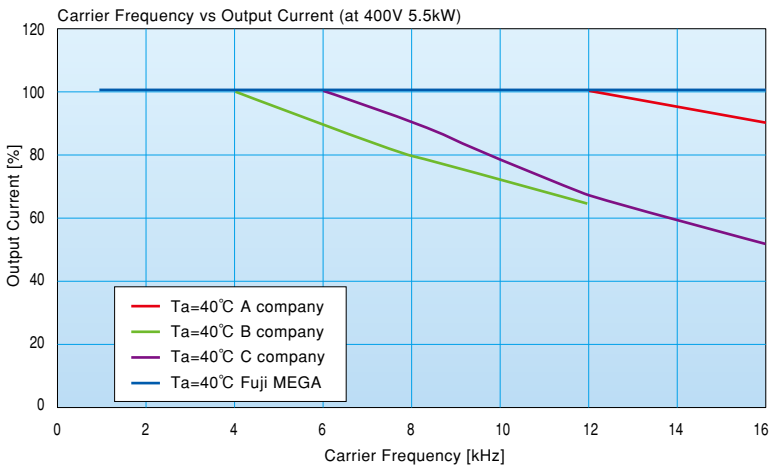

●Quick reference for motor current value

Three-phase 400V series

	Applied Motor [kW]		Rated current [A]		Overload capability, others	
	HD	LD	HD	LD	HD	LD
FRN0.4G1□-4A	0.4	-	1.5	-	150% 1min. 200% 3s fc:10kHzmax fo:500Hzmax V/F PG Vector W/O PG Vector	120% 1min. fc:6kHzmax fo:120Hzmax V/F PG Vector W/O PG Vector
FRN0.75G1□-4A	0.75	-	2.5	-		
FRN1.5G1□-4A	1.5	-	4	-		
FRN2.2G1□-4A	2.2	-	5.5	-		
FRN3.7G1□-4A	3.7	-	9	-		
FRN5.5G1□-4A	5.5	7.5	13.5	16.5		
FRN7.5G1□-4A	7.5	11	18.5	23		
FRN11G1□-4A	11	15	24.5	30.5		
FRN15G1□-4A	15	18.5	32	37		
FRN18.5G1□-4A	18.5	22	39	45		
FRN22G1□-4A	22	30	45	60		
FRN30G1□-4A	30	37	60	75		
FRN37G1□-4A	37	45	75	91		
FRN45G1□-4A	45	55	91	112		
FRN55G1□-4A	55	75	112	150		
FRN75G1□-4A	75	90	150	176		
FRN90G1□-4A	90	110	176	210		
FRN110G1□-4A	110	132	210	253		
FRN132G1□-4A	132	160	253	304		
FRN160G1□-4A	160	200	304	377		
FRN200G1□-4A	200	220	377	415		
FRN220G1□-4A	220	280	415	520		
FRN280G1□-4A	280	355	520	650		
FRN315G1□-4A	315	400	585	740		
FRN355G1□-4A	355	450	650	840		
FRN400G1□-4A	400	500	740	960		
FRN500G1□-4A	500	630	960	1170		
FRN630G1□-4A	630	710	1170	1370		

Three-phase 200V series

	Applied Motor [kW]		Rated current [A]		Overload capability, others	
	HD	LD	HD	LD	HD	LD
FRN0.4G1S-2A	0.4	-	3	-	150% 1min. 200% 3s fc:10kHzmax fo:500Hzmax V/F PG Vector W/O PG Vector	120% 1min. fc:6kHzmax fo:120Hzmax V/F PG Vector W/O PG Vector
FRN0.75G1S-2A	0.75	-	5	-		
FRN1.5G1S-2A	1.5	-	8	-		
FRN2.2G1S-2A	2.2	-	11	-		
FRN3.7G1S-2A	3.7	-	18	-		
FRN5.5G1S-2A	5.5	7.5	27	31.8		
FRN7.5G1S-2A	7.5	11	37	46.2		
FRN11G1S-2A	11	15	49	59.4		
FRN15G1S-2A	15	18.5	63	74.8		
FRN18.5G1S-2A	18.5	22	76	88		
FRN22G1S-2A	22	30	90	115		
FRN30G1S-2A	30	37	119	146		
FRN37G1S-2A	37	45	146	180		
FRN45G1S-2A	45	55	180	215		
FRN55G1S-2A	55	75	215	283		
FRN75G1S-2A	75	90	283	346		
FRN90G1S-2A	90	110	346	415		

Note: A box (□) in the above table replaces S (Basic type) or E (EMC filter built-in type) depending on the enclosure.

NOTES

When running general-purpose motors

- **Driving a 400V general-purpose motor**
  When driving a 400V general-purpose motor with an inverter using extremely long cables, damage to the insulation of the motor may occur. Use an output circuit filter (OFL) if necessary after checking with the motor manufacturer. Fuji's motors do not require the use of output circuit filters because of their reinforced insulation.
- **Torque characteristics and temperature rise**
  When the inverter is used to run a general-purpose motor, the temperature of the motor becomes higher than when it is operated using a commercial power supply. In the low-speed range, the cooling effect will be weakened, so decrease the output torque of the motor. If constant torque is required in the low-speed range, use a Fuji inverter motor or a motor equipped with an externally powered ventilating fan.
- **Vibration**
  When the motor is mounted to a machine, resonance may be caused by the natural frequencies, including that of the machine. Operation of a 2-pole motor at 60Hz or more may cause abnormal vibration.
  * Study use of tier coupling or dampening rubber.
  * It is also recommended to use the inverter jump frequency control to avoid resonance points.
- **Noise**
  When an inverter is used with a general-purpose motor, the motor noise level is higher than that with a commercial power supply. To reduce noise, raise carrier frequency of the inverter. High-speed operation at 60Hz or more can also result in more noise.

When running special motors

- **High-speed motors**
  When driving a high-speed motor while setting the frequency higher than 120Hz, test the combination with another motor to confirm the safety of high-speed motors.
- **Explosion-proof motors**
  When driving an explosion-proof motor with an inverter, use a combination of a motor and an inverter that has been approved in advance.
- **Submersible motors and pumps**
  These motors have a larger rated current than general-purpose motors. Select an inverter whose rated output current is greater than that of the motor.
  These motors differ from general-purpose motors in thermal characteristics. Set a low value in the thermal time constant of the motor when setting the electronic thermal function.
- **Brake motors**
  For motors equipped with parallel-connected brakes, their braking power must be supplied from the primary circuit (commercial power supply). If the brake power is connected to the inverter power output circuit (secondary circuit) by mistake, problems may occur.
  Do not use inverters for driving motors equipped with series-connected brakes.
- **Geared motors**
  If the power transmission mechanism uses an oil-lubricated gearbox or speed changer/reducer, then continuous motor operation at low speed may cause poor lubrication. Avoid such operation.
- **Synchronous motors**
  It is necessary to use software suitable for this motor type. Contact Fuji for details.
- **Single-phase motors**
  Single-phase motors are not suitable for inverter-driven variable speed operation. Use three-phase motors.
  * Even if a single-phase power supply is available, use a three-phase motor as the inverter provides three-phase output.

Environmental conditions

- **Installation location**
  Use the inverter in a location with an ambient temperature range of -10 to 50˚C.
  The inverter and braking resistor surfaces become hot under certain operating conditions. Install the inverter on nonflammable material such as metal.
  Ensure that the installation location meets the environmental conditions specified in "Environment" in inverter specifications.

Combination with peripheral devices

- **Installing a molded case circuit breaker (MCCB)**
  Install a recommended molded case circuit breaker (MCCB) or an earth leakage circuit breaker (ELCB) in the primary circuit of each inverter to protect the wiring. Ensure that the circuit breaker capacity is equivalent to or lower than the recommended capacity.
- **Installing a magnetic contactor (MC) in the output (secondary) circuit**
  If a magnetic contactor (MC) is mounted in the inverter's secondary circuit for switching the motor to commercial power or for any other purpose, ensure that both the inverter and the motor are fully stopped before you turn the MC on or off. Remove the surge killer integrated with the MC.
- **Installing a magnetic contactor (MC) in the input (primary) circuit**
  Do not turn the magnetic contactor (MC) in the primary circuit on or off more than once an hour as an inverter fault may result. If frequent starts or stops are required during motor operation, use FWD/REV signals.
- **Protecting the motor**
  The electronic thermal function of the inverter can protect the motor. The operation level and the motor type (general-purpose motor, inverter motor) should be set. For high-speed motors or water-cooled motors, set a small value for the thermal time constant to protect the motor.
  If you connect the motor thermal relay to the motor with a long cable, a high-frequency current may flow into the wiring stray capacitance. This may cause the relay to trip at a current lower than the set value for the thermal relay. If this happens, lower the carrier frequency or use the output circuit filter (OFL).
- **Regarding power-factor correcting capacitor**
  Do not mount power factor correcting capacitors in the inverter (primary) circuit. Use the DC REACTOR to improve the inverter power factor. Do not use power factor correcting capacitors in the inverter output circuit (secondary). An overcurrent trip will occur, disabling motor operation.
- **Discontinuance of surge killer**
  Do not mount surge killers in the inverter output (secondary) circuit.
- **Reducing noise**
  Use of a filter and shielded wires are typical measures against noise to ensure that EMC Directives are met.
- **Measures against surge currents**
  If an overvoltage trip occurs while the inverter is stopped or operated under a light load, it is assumed that the surge current is generated by open/close of the phase-advancing capacitor in the power system.
  We recommend connecting a DC REACTOR to the inverter.
- **Megger test**
  When checking the insulation resistance of the inverter, use a 500V megger and follow the instructions contained in the Instruction Manual.

Wiring

- **Wiring distance of control circuit**
  When performing remote operation, use twisted shield wire and limit the distance between the inverter and the control box to 20m.
- **Wiring length between inverter and motor**
  If long wiring is used between the inverter and the motor, the inverter will overheat or trip as a result of overcurrent (high-frequency current flowing into the stray capacitance) in the wires connected to the phases. Ensure that the wiring is shorter than 50m. If this length must be exceeded, lower the carrier frequency or mount an output circuit filter (OFL).
- **Wiring size**
  Select cables with a sufficient capacity by referring to the current value or recommended wire size.
- **Wiring type**
  Do not use multicore cables that are normally used for connecting several inverters and motors.
- **Grounding**
  Securely ground the inverter using the grounding terminal.

Selecting inverter capacity

- **Driving general-purpose motor**
  Select an inverter according to the applicable motor ratings listed in the standard specifications table for the inverter. When high starting torque is required or quick acceleration or deceleration is required, select an inverter with a capacity one size greater than the standard.
- **Driving special motors**
  Select an inverter that meets the following condition: Inverter rated current > Motor rated current.

Transportation and storage

When transporting or storing inverters, follow the procedures and select locations that meet the environmental conditions that agree with the inverter specifications.

Fuji Electric Co., Ltd.

Gate City Ohsaki, East Tower, 11-2,
Osaki 1-chome, Shinagawa-ku,
Tokyo 141-0032, Japan
Phone: +81-3-5435-7066 Fax: +81-3-5435-7475
URL: www.fujielectric.com/

Information in this catalog is subject to change without notice.

Printed in Japan 2018-08 (H18c/C07)T00 FOLS