MITSUBISHI ELECTRIC

*Changes for the Better*

for a greener tomorrow

# Molded Case Circuit Breakers
# Earth Leakage Circuit Breakers

## World Super WS-V Series

Mitsubishi Molded Case Circuit Breakers and Earth Leakage Circuit Breakers

Empowering Industries

12 A

# INDEX


1

**Introduction and Features of WS-V Series ..... 2**

**1. Outline of Mitsubishi Circuit Breakers ..... 10**

1) Product Line-up ..... 10
2) Instructions for Application ..... 12

2

**2. Detailed Specifications ..... 13**

**1 Molded Case Circuit Breakers ..... 14**

1) NF-C (Economy class) ..... 14
2) NF-S (Standard class) ..... 16
3) NF-L/NF-H/NF-R (High-performance class) ..... 20
4) NF-U (Ultra current-limiting class) ..... 23

**2 Earth Leakage Circuit Breakers ..... 24**

1) NV-C (Economy class) ..... 24
2) NV-S (Standard class) ..... 26
3) NV-H/NV-R (High-performance class) ..... 28

3

**3 Motor Protection Breakers ..... 30**

1) NF-MB ..... 30

**4 UL 489 Listed Circuit Breakers ..... 31**

1) UL 489 Listed Molded Case Circuit Breakers ..... 31
2) UL 489 Listed Earth Leakage Circuit Breakers ..... 34

**5 Measuring Display Unit Breakers ..... 35**

1) MDU Breakers ..... 35

**6 Miniature Circuit Breakers ..... 44**

1) BH ..... 44
2) BV ..... 48

**7 Circuit Protectors ..... 51**

1) CP ..... 51

**8 Low Voltage Air Circuit Breakers ..... 54**

1) Low Voltage Air Circuit Breakers (AE-SW Series) ..... 54

**9 Earth Leakage Relays ..... 56**

1) Earth Leakage Relays ..... 56

4

**3. Special-purpose Breakers ..... 59**

1) Mag Only (Instantaneous Tripping Circuit Breakers) ..... 60
2) DC MCCBs and DSN Switches ..... 60
3) 400Hz MCCBs ..... 60

5

**4. Selection ..... 61**

**1 Construction and Operation ..... 62**

1) Construction of MCCB ..... 62
2) Construction of ELCB ..... 64

**2 Selection of MCCB and ELCB ..... 65**

1) Selecting Procedure ..... 65
2) Features and Performance ..... 66
3) Current-carrying Capacity and Operating Temperature ..... 68
4) Application of Circuit Breaker According to Breaking Capacity ..... 70
5) Selection of Circuit Breaker for Electric Lamp or Heater Circuit ..... 71
6) Selection of Circuit Breaker for Motor Branch Circuit ..... 73
7) Selection of Motor Protection Breaker ..... 75

6

8) Selection of Circuit Breaker for Inverter Circuit ..... 76
9) Selection of Circuit Breaker for Transformer Primary Side ..... 77
10) Combination for Selective Breaking ..... 81
11) Combinations for Cascade Breaking ..... 83
12) International Standard Conformance List ..... 85

**3 Selection of ELCB ..... 88**

1) Electric Shock Protection ..... 88
2) ELCB Grounding Method ..... 89
3) Rated Voltage and Number of Poles ..... 90
4) Earth Fault Protection Coordination and Combination of Devices ..... 91

7

**5. Installation and Connection ..... 93**

1) Connection Types ..... 94
2) Connecting Parts ..... 96
3) Standard Tightening Torque ..... 97
4) Crimp Terminal Type ..... 98
5) Busbar ..... 100
6) Insulation Distance on Power Source Side ..... 101
7) Effect of Installation Orientation ..... 102
8) Connection of Line and Load ..... 102

8

**6. Accessories ..... 103**

**1 Internal Accessories ..... 104**

1) Internal Accessories ..... 104
2) Kinds of Internal Accessories ..... 105
3) Operations and Ratings of Switches ..... 105
4) Maximum Number of Internal Accessories ..... 106
5) Cassette Type Accessories ..... 111
6) Shunt Trip (SHT) ..... 113
7) Undervoltage Trip (UVT) ..... 114
8) Lead Wire Drawing ..... 116
9) Lead Wire Terminal Block ..... 116
10) Test Button Module (TBM) ..... 117
11) Pre-Alarm Module (PAL) ..... 118

9

**2 External Accessories ..... 119**

1) F-type Operating Handle (Breaker Mount Type) ..... 119
2) V-type Operating Handle (Door Mount Type) ..... 121
3) Terminal Covers ..... 123
4) Insulating Barriers ..... 126
5) Handle Lock Devices, Lock Covers, Auxiliary Handles, Card Holders ..... 129
6) Mechanical Interlocks (MI) ..... 131
7) Boxes for Circuit Breakers and Boxed Circuit Breakers ..... 132
8) Electrical Operated Circuit Breakers and Electrical Operation Device ..... 135
9) Distribution Board Mounting Parts, Lock Covers and Handle Caps ..... 138
10) IEC 35-mm Rail Mounting Adapters ..... 139

## 7. Characteristics and Dimensions ..... 141


**1 Molded Case Circuit Breakers ..... 142**

- NF30-CS ..... 142
- NF32-SV, NF63-CV/SV/HV ..... 144
- NF125-CV/SV/HV ..... 146
- NF125-UV ..... 148
- NF250-CV/SV/HV ..... 150
- NF250-UV ..... 152
- NF125-SGV/LGV/HGV/RGV, NF160-SGV/LGV/HGV, NF250-SGV/LGV/HGV/RGV ..... 154
- NF125-SEV/HEV, NF250-SEV/HEV ..... 156
- NF400-CW/SW ..... 158
- NF400-SEW/HEW/REW ..... 160
- NF400-UEW ..... 162
- NF630-CW/SW ..... 164
- NF630-SEW/HEW/REW ..... 166
- NF800-CEW/SEW/HEW/REW ..... 168
- NF800-SDW ..... 170
- NF800-UEW ..... 172
- NF1000-SEW, NF1250-SEW ..... 174
- NF1250-SDW ..... 176
- NF1600-SEW ..... 178
- NF1600-SDW ..... 180

**2 Earth Leakage Circuit Breakers ..... 182**

- NV32-SV, NV-63CV/SV/HV ..... 182
- NV125-CV/SV/HV ..... 184
- NV250-CV/SV/HV ..... 186
- NV125-SEV/HEV, NV250-SEV/HEV ..... 188
- NV400-CW/SW ..... 190
- NV400-SEW/HEW/REW ..... 192
- NV630-CW/SW ..... 194
- NV630-SEW/HEW ..... 196
- NV800-SEW/HEW ..... 198

**3 UL 489 Listed Circuit Breakers ..... 200**

- NF50-SVFU, NV50-SVFU ..... 200
- NF100-CVFU, NV100-CVFU ..... 202
- NF125-SVU/HVU, NV125-SVU/HVU ..... 204
- NF225-CWU ..... 206
- NF250-SVU/HVU, NV250-SVU/HVU ..... 208
- NF-SKW ..... 210
- NF-SLW ..... 212

**4 Measuring Display Unit Breakers ..... 214**

- NF250-SEV/HEV with MDU ..... 214
- NF400-SEP/HEP with MDU ..... 216
- NF630-SEP/HEP with MDU, NF800-SEP/HEP with MDU ..... 218

**5 Miniature Circuit Breakers, Residual Current Circuit Breakers, Residual Current Circuit Breakers with Overcurrent Protection and Isolating Switch ..... 220**

- BH,BH-P ..... 220
- BH-S ..... 221
- BH-PS ..... 222
- BH-D6, BH-D10 ..... 223
- BH-DN ..... 224
- BV-D ..... 225
- BV-DN ..... 226
- KB-D ..... 227

**6 Circuit Protectors ..... 228**

- CP30-BA ..... 228

**7 Electrical Operated Cicuit Breakers ..... 229**


## 8. Handling and Maintenance ..... 235


1) Storage and Transportation ..... 236
2) Standard Working Conditions ..... 236
3) Mounting and Connections ..... 236
4) Maintenance and Inspections ..... 238
5) Troubleshooting ..... 240


## 9. Appendix ..... 243


1) Handle Operation Angle Dimensions ..... 244
2) MCCB Trip Button, Instantaneous Adjustment Dial Drilling and Terminal Cover Mounting Hole Dimensions ..... 245
3) ELCB Button and Switch Dimensions ..... 246
4) List of Product Weights ..... 247
5) Switching the Adjustable Items ..... 248
6) Breaker Mounting Screw Dimensions ..... 251
7) List of Mold Surface Temperature-rise Values ..... 252
8) Ordering Information ..... 253
9) Melshort 2 ..... 255
10) Low Voltage Products Website ..... 256

# Breaking Through

Since we, Mitsubishi Electric, launched the first low-voltage circuit breakers in Japan in 1933, Mitsubishi low-voltage circuit breakers has satisfied the needs of the age and led the industry market for more than half a century all over the world.

By bringing together our years of experience and technologies, we would like to introduce "WS-V Series" circuit breakers with superior aspects such as the higher breaking capacity, design for easy use, standardization of accessory parts, compliance to the up to date international standards and so on.

We believe "WS-V Series" circuit breakers will fulfill every customer's needs with its high performance and we will continue to develop and manufacture superior products that contribute to a better life for all people.

# The Industry

World Super
WS-V Series

# High-Performance

## Technologies based on long year experience are brought together to realize more improved performance

■ The new circuit breaking technology "Expanded ISTAC" has improved the current-limiting performance and upgraded the overall breaking capacity.
Expansion of the conductor under the stator shortens the contact parting time of the mover as compared to the conventional ISTAC structure.
The current-limiting performance has been improved remarkably. (The maximum peak current value has been reduced by approx. 10%.)

**Example of breaking capacity improvement**

| Previous Model NF250-SW | → | New Model NF250-SV |
|---|---|---|
| 50kA / 25kA (at 230VAC) | | 85kA / 85kA (at 230VAC) |

**New circuit breaking technology (Expanded ISTAC)**

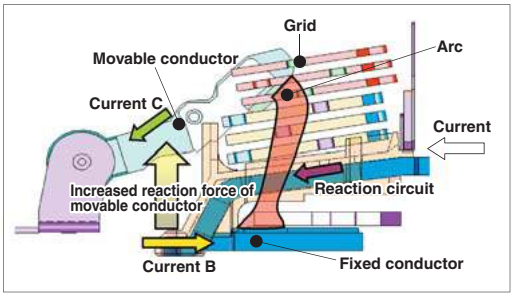


## Breaking capacity of 5 models is 20% to 50% higher than the W & WS Series

■ Improvement of breaking capacity on 250AF-C/S/H models (Fixed) & 125.250AF-R models (Thermal/Adjustable).

■Breaking capacity comparison with a conventional model

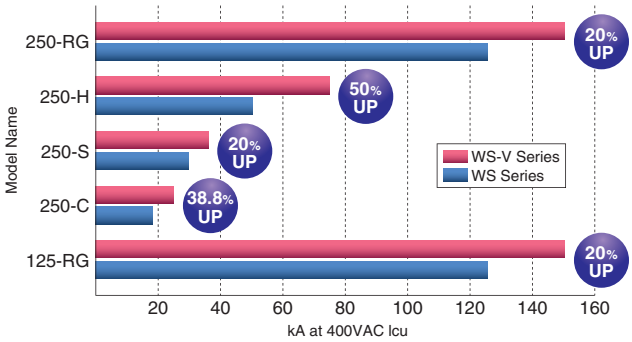

## The new electronic circuit breakers (with display) and MDU breakers can display various measurement items

■ This will enable energy management through “visualization”, which leads to energy saving.

Electronic Circuit Breaker (with display)

Measuring Display Unit Breaker

- The display is on the circuit breaker body and shows circuit information.
- Detailed setting can be done on the display.
- The display turns red during alarms.

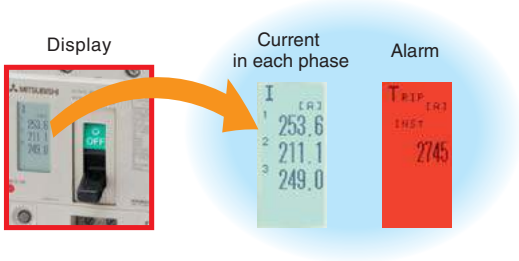


## Intelligent Communications through CC-Link

■ Measuring data can be transmitted to Personal Computer through CC-Link.

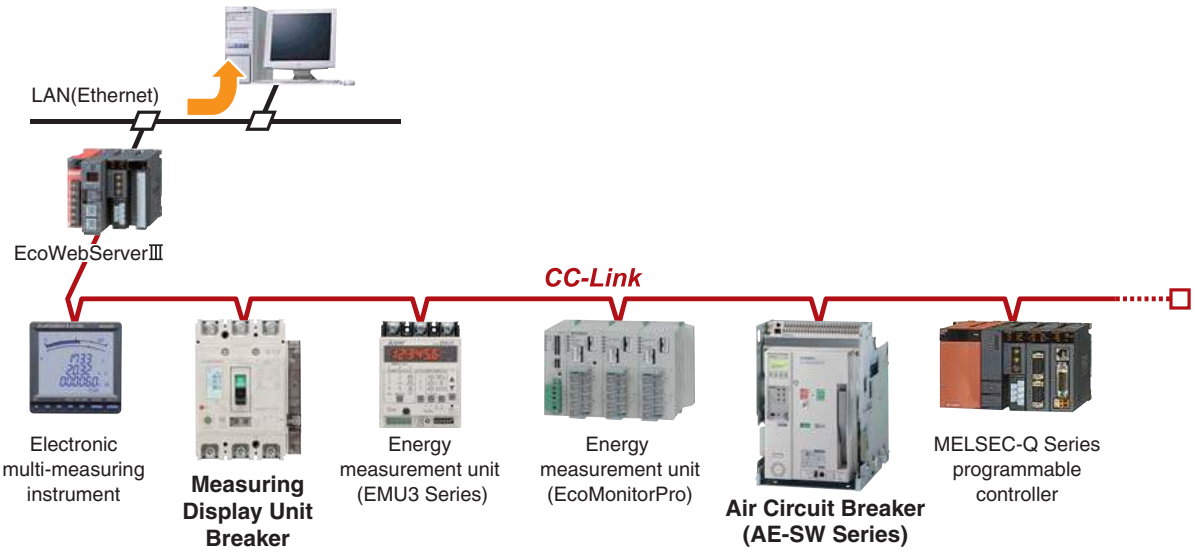

# Standardizaion

## Compact design for easy to use

■ The thermal adjustable circuit breakers and electronic circuit breakers are smaller.

NF250-SGW

(Conventional model : 105 × 165 × **86mm**)

NF250-SGV

(New model : 105 × 165 × **68mm**)

**Volume ratio 79%**
(Compared with our conventional models)

■ 250AF circuit breakers' fixed types (NF250-CV, NF250-SV, NF250-HV, NV250-CV, NV250-SV, NV250-HV), thermal adjustable types (NF250-SGV, NF250-HGV, NF250-RGV), and electronic types (NF250-SEV, NF250-HEV, NV250-SEV, NV250-HEV) are the same size, leading to the reduction and standardization of panel design.

## Types of internal accessories are reduced from 3 types to 1 type

■ Standardization of internal accessories contributes to the reduction of stock and delivery time.

**Conventional models** — Three types
- For 32/63AF
- For 125AF
- For 250AF

**New models** — One type
- **For 32 to 250AF**

**Applicable accessories**

●AL ●AX ●AL+AX ●SHT ●UVT

■ 32AF and 63AF circuit breakers can now be used in both AC and DC circuits without specifying when ordering. This will lead to prevention of ordering mistakes.

■ The earth leakage circuit breakers can now be equipped with a voltage shunt trip device (SHT).

# High Quality

## Innovative manufacturing using a robot-cell production line

■ This manufacturing innovation takes the pursuit of increased productivity, shortened manufacturing lead-time and improved quality to the upper limits.

Robot-cell Production Line

## Individual unit production management system

■ A multi-model, single-unit flow production system is utilized the ultimate multi-cycle production method. The production line is controlled using barcodes to manage the model information for each unit. Small-lot, flexible production that's one step ahead!

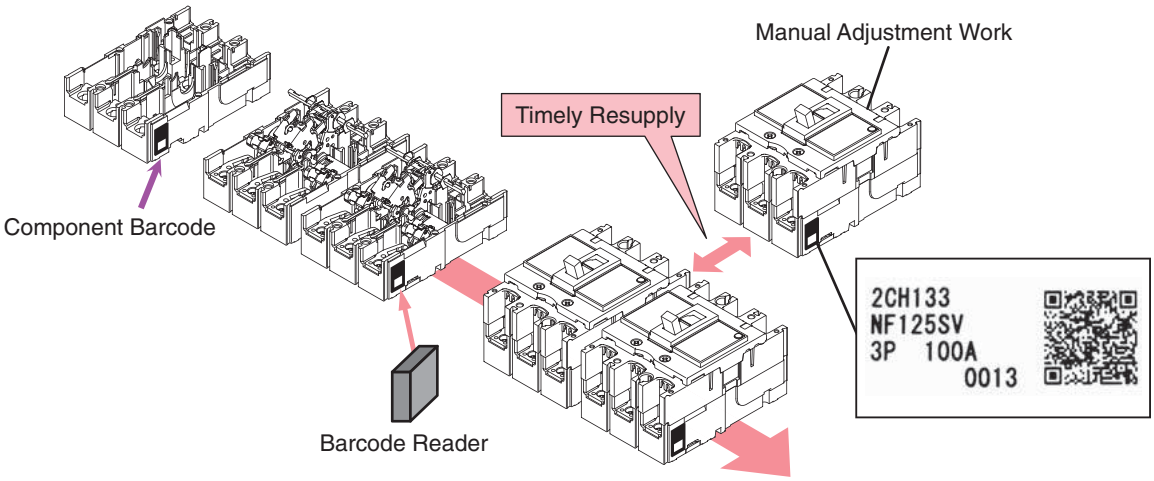

# Environment

## Use of Various Recyclable Materials

- The circuit breakers are made of thermo-plastic materials that are easy to recycle.
  (Some models are partially made of thermoset materials.)
  The major plastic parts bear material identifications so that they can be recycled.

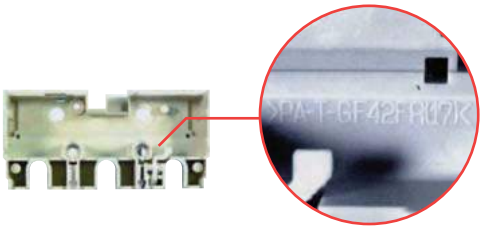

## Nonuse of Hazardous Substances

- Eco-friendly design is used for all circuit breakers, and they do not use hazardous substances. The circuit breakers comply with RoHS regulation.

## Energy Saving at Mitsubishi Electric Corporation Fukuyama Works

- Mitsubishi Electric Corporation Fukuyama Works uses energy saving support devices such as MDU breakers and EcoServer to save energy through “visualization” of energy. Along with “visualization”, Fukuyama Works also installed high-efficiency equipments to further promote energy saving.
  Through energy saving activity, Fukuyama Works has successfully reduced its electrical power consumption rate by 27% in 2007 (compared with 1990).

# Global

## Global Networks of Sales Offices and Production Bases

■ Our sales networks are designed to comfort customers internationally through the worldwide distributors. Constantly contactable distributors enable us to accommodate customer's needs for smooth supply.

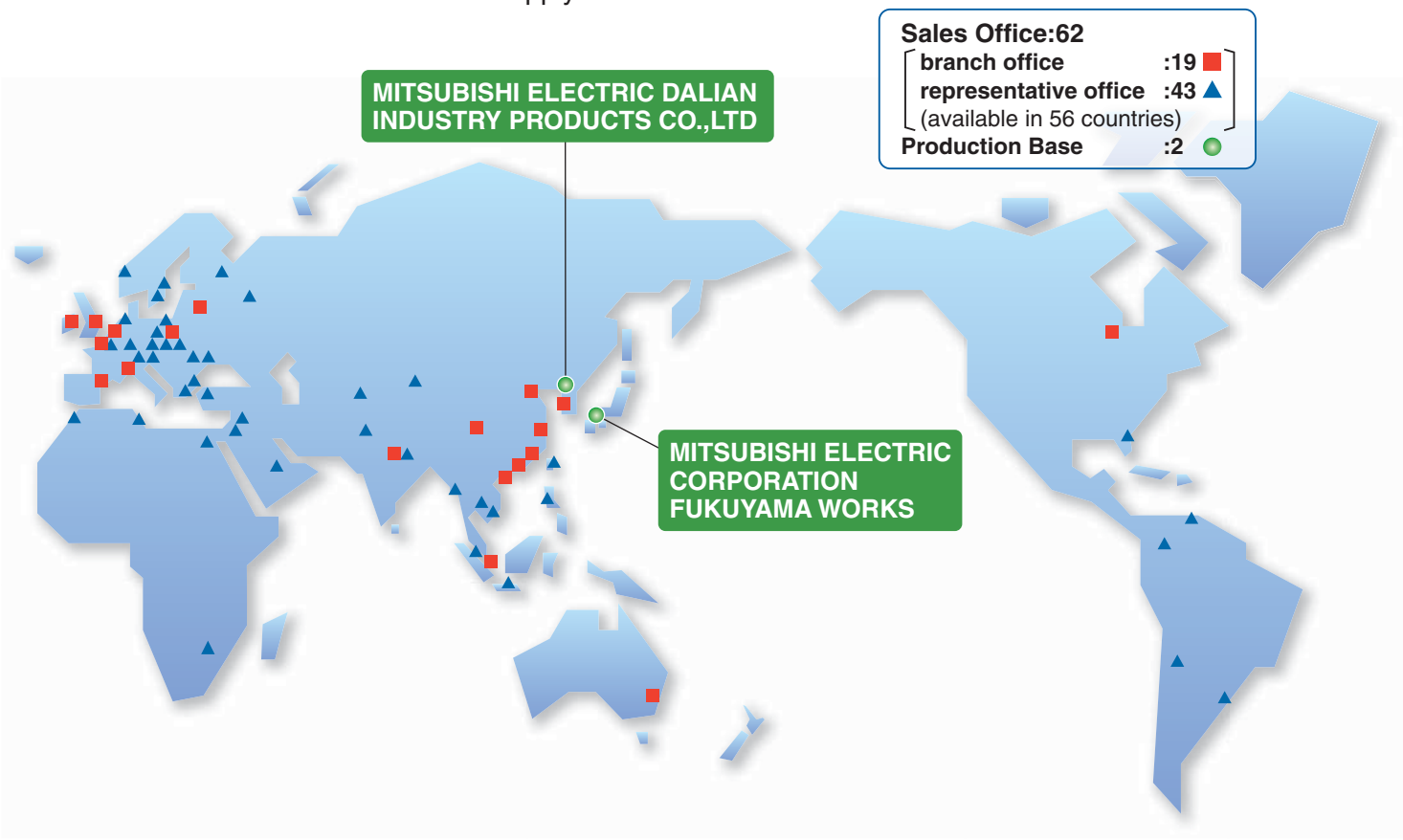

## Product Line-up

| Classification | | Frame (A) 20 30 32 | 40 50 60 63 | 70 100 125 | 160 |
|---|---|---|---|---|---|
| Molded Case Circuit Breakers | NF-C Economy class | NF30-CS | NF63-CV | NF125-CV | |
| | NF-S Standard class | NF32-SV | NF63-SV | NF125-SV NF125-SGV NF125-SEV | NF160-SGV |
| | NF-H/L High-performance class | | NF63-HV | NF125-HV NF125-LGV NF125-HEV NF125-HGV | NF160-LGV NF160-HGV |
| | NF-R/U Ultra current-limiting class | | | NF125-RGV NF125-UV | |
| Earth Leakage Circuit Breakers | NV-C Economy class | | NV63-CV | NV125-CV | |
| | NV-S Standard class | NV32-SV | NV63-SV | NV125-SV NV125-SEV | |
| | NV-H/R High-performance class | | NV63-HV | NV125-HV NV125-HEV | |
| Motor Protection Breakers | NF-MB | MB30-CS NF32-SV (*1) | NF63-CV (*1) NF63-SV (*1) | NF125-SV (*1) | |
| UL 489 Listed Circuit Breakers | UL 489 Listed MCCB | | NF50-SVFU | NF100-CVFU NF125-SVU NF125-HVU | |
| | UL 489 Listed ELCB | | NV50-SVFU | NV100-CVFU NV125-SVU NV125-HVU | |
| Measuring Display Unit Breakers | MDU Breakers | | | | |
| Miniature Circuit Breakers | | BH-DN | BH-S BH-PS BH-D6 BH-D10 | BH BH-P | |
| Residual Current Circuit Breaker | | | BV-D | | |
| Residual Current Circuit Breaker with Overload Protection | | | BV-DN | | |
| Isolating Switch | | | KB-D | | |
| Circuit Protectors | | CP30-BA CP-S | | | |
| Air Circuit Breakers | AE-SW | | | | |
| Related Components | Earth Leakage Relays | NV-ZBA, NV-ZSA, NV-ZHA, NV-ZLA | | | |

Note *1 When placing an order, specify "MB."
WS-V Series (New models)

| Molded Case Circuit Breakers | | | | | |
|---|---|---|---|---|---|
| NF-C | NF-S | NF-H | NF-L | NF-R | NF-U |
| | | | | | |

| Earth Leakage Circuit Breakers | | | | Motor Protection Breakers |
|---|---|---|---|---|
| NV-C | NV-S | NV-H | NV-R | NF-MB |
| | | | | |

| UL 489 Listed Circuit Breakers | | Measuring Display Unit Breakers |
|---|---|---|
| UL 489 Listed MCCB | UL 489 Listed ELCB | MDU Breakers |
| | | |

| 225 250 | 400 | 600 630 | 800 | 1000 | 1250 | 1600 | 2000 | 2500 | 3200 | 4000 | 5000 | 6300 |
|---|---|---|---|---|---|---|---|---|---|---|---|---|
| NF250-CV | NF400-CW | NF630-CW | NF800-CEW | | | | | | | | | |
| NF250-SV NF250-SGV<br>NF250-SEV | NF400-SW<br>NF400-SEW | NF630-SW<br>NF630-SEW | NF800-SDW<br>NF800-SEW | NF1000-SEW | NF1250-SDW<br>NF1250-SEW | NF1600-SDW<br>NF1600-SEW | | | | | | |
| NF250-HV NF250-LGV<br>NF250-HEV NF250-HGV | NF400-HEW | NF630-HEW | NF800-HEW | | | | | | | | | |
| NF250-RGV<br>NF250-UV | NF400-REW<br>NF400-UEW | NF630-REW | NF800-REW<br>NF800-UEW | | | | | | | | | |
| NV250-CV | NV400-CW | NV630-CW | | | | | | | | | | |
| NV250-SV<br>NV250-SEV | NV400-SW<br>NV400-SEW | NV630-SW<br>NV630-SEW | NV800-SEW | | | | | | | | | |
| NV250-HV<br>NV250-HEV | NV400-HEW<br>NV400-REW | NV630-HEW | NV800-HEW | | | | | | | | | |
| NF250-SV (*1) | | | | | | | | | | | | |
| NF225-CWU<br>NF250-SVU<br>NF250-HVU | NF-SKW | NF-SLW | | | | | | | | | | |
| NV250-SVU<br>NV250-HVU | | | | | | | | | | | | |
| NF250-SEV with MDU<br>NF250-HEV with MDU | NF400-SEP with MDU<br>NF400-HEP with MDU | NF630-SEP with MDU<br>NF630-HEP with MDU | NF800-SEP with MDU<br>NF800-HEP with MDU | | | | | | | | | |
| | | | | | | | | | | | | |
| | | | | | | | | | | | | |
| | | AE630-SW | | AE1000-SW | AE1250-SW | AE1600-SW | AE2000-SW<br>AE2000-SWA | AE2500-SW | AE3200-SW | AE4000-SWA<br>AE4000-SW | AE5000-SW | AE6300-SW |
| | | | | | | | | | | | | |

| Miniature Circuit Breakers | | | | | | |
|---|---|---|---|---|---|---|
| BH-DN | BH-S | BH-D6 | BH-PS | BH-D10 | BH | BH-P |
| | | | | | | |

| Residual Current Circuit Breaker | Residual Current Circuit Breaker with Overload Protection | Isolating Switch |
|---|---|---|
| BV-D | BV-DN | KB-D |
| | | |

| Circuit Protectors | | Air Circuit Breakers | Related Components |
|---|---|---|---|
| CP30-BA | CP-S | AE-SW | Earth Leakage Relays |
| | | | |

# Instructions for Application

## 1. Safety Precautions

- Carefully read the safety precautions prior to use the circuit breaker correctly.
- Important safety instructions are given below. Strictly observe the instructions.
- Be sure to communicate these safety precautions to the end user.

[Explanation of warning symbols]

| | |
|---|---|
| ⚠ DANGER | Incorrect handling of the product will result in a hazardous situation, such as death or serious injury. |
| ⚠ CAUTION | Incorrect handling of the product may result in a hazardous situation according to circumstances. |

**⚠ DANGER**

- Do not touch the terminal area. Doing so can cause an electric shock.
- The earth leakage circuit breakers are designed to operate when the difference between leaving current and returning current exceeds the specified value. In the case shown in this figure, earth leakage is not detected. Therefore, never touch the two bare live parts. The circuit breaker will not operate upon occurrence of an electric shock.

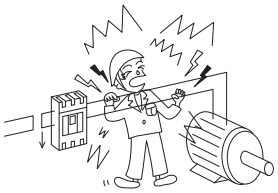

Earth leakage circuit breaker

Instructions for installation

**⚠ CAUTION**

- The electrical work shall be performed by qualified personnel (electrical workers).
- Before performing wiring work, turn off the upstream circuit breaker, and ensure that no current is flowing through the circuit breaker to be wired. Failure to do so may expose you to shock hazard.
- When connecting any wire, tighten the terminal screw to the torque specified in the instruction manual. Failure to do so may cause a fire.
- When the model comes with insulating barriers as standard accessories, install the insulating barriers without fail.
- Do not install the circuit breaker in an abnormal environment with high temperature, high moisture, dust, corrosive gas, vibration or shock. Doing so may cause a fire or make the circuit breaker inoperative.
- Protect the circuit breaker so that foreign particles, such as dust, concrete powder and iron powder, and rain water will not enter the circuit breaker. Failure to do so may make the circuit breaker inoperative.

[Earth leakage circuit breaker]

- When using an earth leakage circuit breaker for use only in single-phase 3-wire or 3-phase 4-wire systems, connect the neutral wire to the neutral phase without fail. If they are not connected, the circuit breaker may not operate in the case of open phase or overcurrent, thereby resulting in a fire.
- Connect the circuit breaker to a power supply appropriate to the rating of its body. Failure to do so may make the circuit breaker inoperative or damage it.
- Tighten securely the lead wire in the open phase to the neutral wire on the load side. If the wires are not connected, the open phase of the neutral wire cannot be detected.
- When there are two terminal screws for the neutral pole, tighten the screws alternately. Failure to do so may loosen the screws, thereby causing a fire.

Instructions for use

**⚠ CAUTION**

- When the circuit breaker automatically breaks a circuit, turn on the handle after removing the cause. Failure to do so may cause an electric shock or a fire.

[Earth leakage circuit breaker]

- Ground the earth terminal of electrical equipment. Failure to do so may cause an electric shock or a fire.
- Press the test button to check the operation once a month or so. If the earth leakage circuit breaker is not turned off, it is out of order. Consult an electrician.

Instructions for maintenance

**⚠ CAUTION**

- The circuit breakers shall be maintained by persons with specialized knowledge.
- Before maintaining, turn off the upstream circuit breaker, and ensure that no current is flowing through the circuit breaker to be maintained. Failure to do so may expose you to shock hazard.
- Retighten the terminals periodically. Failure to do so may cause a fire.

Instructions for disposal

**⚠ CAUTION**

- When disposing of the product, treat it as industrial waste.

## 2. Instructions for Application

(1) Please note that the specifications for the products in this catalog are subject to change without prior notice.

(2) The products in this catalog are designed and manufactured as general-purpose products for general industrial uses. If you intend to use them for a special purpose, such as nuclear power, electric power, aerospace, medical or passenger vehicle equipment or systems, please contact our sales representative.

(3) We are not responsible for compensation for damage caused by any reason not attributable to us, opportunity loss or lost earnings of customer caused by trouble of our product, damage, secondary damage, accidents or damage to any product other than our product caused by special circumstances or any other operation.

# 2

# Detailed Specifications


## 1 Molded Case Circuit Breakers 14

1) NF-C (Economy class) ..... 14
2) NF-S (Standard class) ..... 16
3) NF-L/NF-H/NF-R (High-performance class) ..... 20
4) NF-U (Ultra current-limiting class) ..... 23

## 2 Earth Leakage Circuit Breakers 24

1) NV-C (Economy class) ..... 24
2) NV-S (Standard class) ..... 26
3) NV-H/NV-R (High-performance class) ..... 28

## 3 Motor Protection Breakers 30

1) NF-MB ..... 30

## 4 UL 489 Listed Circuit Breakers 31

1) UL 489 Listed Molded Case Circuit Breakers ..... 31
2) UL 489 Listed Earth Leakage Circuit Breakers ..... 34

## 5 Measuring Display Unit Breakers 35

1) MDU Breakers ..... 35

## 6 Miniature Circuit Breakers 44

1) BH ..... 44
2) BV ..... 48

## 7 Circuit Protectors 51

1) CP ..... 51

## 8 Low Voltage Air Circuit Breakers 54

1) Low Voltage Air Circuit Breakers (AE-SW Series) ..... 54

## 9 Earth Leakage Relays 56

1) Earth Leakage Relays ..... 56

## NF-C (Economy class)

| Frame (A) | | | | 30 | | 50 | | 60 | | 63 | | 100 | | 125 | |
|---|---|---|---|---|---|---|---|---|---|---|---|---|---|---|---|
| Model | | | | NF30-CS | | NF63-CV | | | | | | NF125-CV | | | |
| Image | | | | | | | | | | | | | | | |
| Rated current In (A) Rated ambient temperture 40°C (45°C for marine use) | | | | 3 5 10 15 20 30 | | 3 4 (5) 6 10 (15) 16 20 25 (30) 32 40 50 | | (60) | | 63 | | 50 (60) 63 (75) 80 100 | | 125 | |
| Number of poles | | | | 2 | 3 | 2 | 3 | 2 | 3 | 2 | 3 | 2 | 3 | 2 | 3 |
| Rated insulation voltage Ui (V) | | | | 500 | | 600 | | 600 | | 600 | | 600 | | 600 | |
| Rated short-circuit breaking capacities (kA) | IEC 60947-2 EN 60947-2 (Icu/Ics) | AC | 690V | – | | – | | – | | – | | – | | – | |
| | | | 500V | – | | 2.5/2.5 | | 2.5/2.5 | | 2.5/2.5 | | 7.5/4 | | 7.5/4 | |
| | | | 440V | – | | 2.5/2.5 | | 2.5/2.5 | | 2.5/2.5 | | 10/5 | | 10/5 | |
| | | | 415V | 1.5/1.5 | | 2.5/2.5 | | 2.5/2.5 | | 2.5/2.5 | | 10/5 | | 10/5 | |
| | | | 400V | 1.5/1.5 | | 5/5 | | 5/5 | | 5/5 | | 10/5 | | 10/5 | |
| | | | 380V | 1.5/1.5 | | 5/5 | | 5/5 | | 5/5 | | 10/5 | | 10/5 | |
| | | | 230V | 2.5/2 (240V) | | 7.5/7.5 | | 7.5/7.5 | | 7.5/7.5 | | 30/15 | | 30/15 | |
| | | | 200V | 2.5/2 (240V) | | 7.5/7.5 | | 7.5/7.5 | | 7.5/7.5 | | 30/15 | | 30/15 | |
| | | DC | 250V | – | | 2.5/2.5 (*7) | | 2.5/2.5 (*7) | | 2.5/2.5 (*7) | | 7.5/4 (*4) | | 7.5/4 (*4) | |
| Rated impulse withstand voltage Uimp (kV) | | | | 4 | | 8 | | 8 | | 8 | | 8 | | 8 | |
| Current (*1) | | | | AC | | AC/DC compatible | | AC/DC compatible | | AC/DC compatible | | AC/DC compatible | | AC/DC compatible | |
| Suitability for isolation | | | | – | | Compatible | | Compatible | | Compatible | | Compatible | | Compatible | |
| Reverse connection | | | | – | | Possible | | Possible | | Possible | | Possible | | Possible | |
| Number of operating cycles | Without current | | | 10,000 | | 10,000 | | 10,000 | | 10,000 | | 10,000 | | 10,000 | |
| | With current (440VAC) | | | 6,000 (AC415V) | | 6,000 | | 6,000 | | 6,000 | | 6,000 | | 6,000 | |
| Utilization category | | | | A | | A | | A | | A | | A | | A | |
| Pollution degree | | | | 2 | | 3 | | 3 | | 3 | | 3 | | 3 | |
| EMC environment condition (environment A or B) | | | | N/A | | N/A | | N/A | | N/A | | N/A | | N/A | |
| Overall dimensions (mm) | 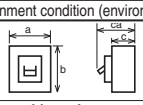 | | a | 45 | 67.5 | 50 | 75 | 50 | 75 | 50 | 75 | 60 | 90 | 60 | 90 |
| | | | b | 96 | | 130 | | 130 | | 130 | | 130 | | 130 | |
| | | | c | 52 | | 68 | | 68 | | 68 | | 68 | | 68 | |
| | | | ca | 67 | | 90 | | 90 | | 90 | | 90 | | 90 | |
| Mass of front-face type (kg) | | | | 0.25 | 0.35 | 0.45 | 0.65 | 0.5 | 0.7 | 0.5 | 0.7 | 0.6 | 0.9 | 0.6 | 0.9 |
| Installation and connections | Front connection | (F) | Page | ●Screw terminal | | ●Screw terminal | | ●Screw terminal | | ●Screw terminal | | ●Screw terminal | | ●Screw terminal | |
| | Solderless (BOX) terminal | (SL) | 94 | – | | – | | – | | – | | ● | | ● | |
| | Rear | (B) | | ●Round stud (assembled in) | | ●Round stud | | ●Round stud | | ●Round stud | | ●Bar stud | | ●Bar stud | |
| | Plug-in | (PM) | | – | | ● | | ● | | ● | | ● | | ● | |
| Cassette-type accessories | Alarm switch | (AL) | 104 | ● (*5) | | ● (*6) | | ● (*6) | | ● (*6) | | ● (*6) | | ●(*6) | |
| | Auxiliary switch | (AX) | | ●(*5) | | ● (*6) | | ● (*6) | | ● (*6) | | ● (*6) | | ●(*6) | |
| | Shunt trip | (SHT) | | – | | ● (*6) | | ● (*6) | | ● (*6) | | ● (*6) | | ●(*6) | |
| | Undervoltage trip | (UVT) | | – | | ● (*6) | | ● (*6) | | ● (*6) | | ● (*6) | | ●(*6) | |
| | With lead-wire terminal block | (SLT) | 116 | ● | | ● | | ● | | ● | | ● | | ● | |
| | Pre-alarm | (PAL) | 118 | – | | – | | – | | – | | – | | – | |
| External accessories | Enclosure | Closed (S) | 132 | ● | | ● | | ● | | ● | | ● | | ● | |
| | | Dustproof (I) | | – | | ● | | ● | | ● | | ● | | ● | |
| | | Waterproof (W) | | – | | – | ● | – | ● | – | ● | – | ● | – | ● |
| | Electrical operation device | (NFM) | 135 | – | | – | | – | | – | | – | ● | – | ● |
| | Mechanical interlock (MI) (*10) | Panel mounting | 131 | – | | ● | | ● | | ● | | ● | | ● | |
| | | Breaker mounting | | – | | ● | | ● | | ● | | ● | | ● | |
| | Handle lock device | LC | 129 | ● | | ● | | ● | | ● | | ● | | ● | |
| | | HL | | ● | | ● | | ● | | ● | | ● | | ● | |
| | | HL-S | | – | | ● | | ● | | ● | | ● | | ● | |
| | External operating handle | (F) | 119 | – | | ● | | ● | | ● | | ● | | ● | |
| | | (V) | | – | | ● | | ● | | ● | | ● | | ● | |
| | Terminal cover (TC-L, TC-S, TTC, BTC, PTC) | | 123 | ● | | ● | | ● | | ● | | ● | | ● | |
| | Rear stud | (B-ST) | 96 | – | | ● | | ● | | ● | | ● | | ● | |
| | Plug-in | (PM) | | – | | ● | | ● | | ● | | ● | | ● | |
| | IEC 35mm rail mounting adapters | | 139 | ● | | ● | | ● | | ● | | – | | – | |
| CE marking | | | | TÜV approval | | Self-declaration | | Self-declaration | | Self-declaration | | Self-declaration | | Self-declaration | |
| CCC recognition | | | | Recognition in process | | Recognition in process | | Recognition in process | | Recognition in process | | Recognition in process | | Recognition in process | |
| Marine use approval (NK, LR, ABS, GL) | | | | ☆ (NK, LR, ABS) | | ☆ | | ☆ | | ☆ | | ☆ | | ☆ | |
| Automatic tripping device | | | | Hydraulic magnetic | | Thermal-magnetic | | Thermal-magnetic | | Thermal-magnetic | | Thermal-magnetic | | Thermal-magnetic | |
| Trip button | | | | – (*2) | | Equipped | | Equipped | | Equipped | | Equipped | | Equipped | |
| Page of Characteristics and dimensions | | | | 142 | | 144 | | | | | | 146 | | | |

Notes:
*1 The trip action characteristics differ between AC and DC for products that are compatible with both AC and DC.
*2 It is attached with the alarm switch.
*3 In case of a current rating of 100A, it does not specify NK rating.
*4 Use two poles for three- and four-pole products. In this case, do not use the neutral pole of the four-pole products. If wired as shown on the right, three and four poles can be used for up to 400 and 500VDC, respectively.
*5 The standard lead drawing is performd laterally. Load drawing is also available.
*6 The cassette type design makes it easy for customer to install. Available for installation on side below 250A frame (excluding UVT).
*7 Use two poles for three- and four-pole products. In this case, do not use the neutral pole of the four-pole products. Not available for use with connection as shown on the right.
*8 Place an order of other models in conjunction with the circuit breaker.
*9 Solid state relay output is option. Please specify if other output is necessary. (Standard type is thus SLT equipped).
*10 Not isolation compatible, excluding 400 to 800A frame.

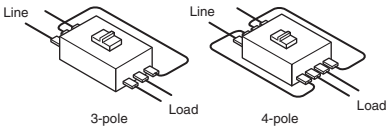

## NF-C (Economy class)

| | | | | | | |
|---|---|---|---|---|---|---|
| 225 | 250 | 400 | 600 | 630 | 800 |
| NF250-CV | | NF400-CW | NF630-CW | | NF800-CEW |
| | | | | | |
| (100) 125 150 175 200 225 (*3) | 250 | 250 300 350 400 | 500 600 | 630 | Adjustable 400 450 500 600 700 800 |
| 2 / 3 | 2 / 3 | 2 / 3 | 2 / 3 | 2 / 3 | 3 |
| 600 | 600 | 690 | 690 | 690 | 690 |
| – | – | – | – | – | – |
| 10/8 | 10/8 | 15/8 | 18/9 | 18/9 | 18/9 |
| 15/12 | 15/12 | 25/13 | 36/18 | 36/18 | 36/18 |
| 25/19 | 25/19 | 36/18 | 36/18 | 36/18 | 36/18 |
| 25/19 | 25/19 | 36/18 | 36/18 | 36/18 | 36/18 |
| 25/19 | 25/19 | 40/20 | 40/20 | 40/20 | 40/20 |
| 36/27 | 36/27 | 50/25 | 50/25 | 50/25 | 50/25 |
| 36/27 | 36/27 | 50/25 | 50/25 | 50/25 | 50/25 |
| 15/12 (*4) | 15/12 (*4) | 20/10 (*4) | 20/10 (*4) | 20/10 (*4) | – |
| 8 | 8 | 8 | 8 | 8 | 8 |
| AC/DC compatible | AC/DC compatible | AC/DC compatible | AC/DC compatible | AC/DC compatible | AC |
| Compatible | Compatible | Compatible | Compatible | Compatible | Compatible |
| Possible | Possible | Possible | Possible | Possible | Possible |
| 8,000 | 8,000 | 6,000 | 6,000 | 6,000 | 4,000 |
| 4,000 | 4,000 | 1,000 | 1,000 | 1,000 | 500 |
| A | A | A | A | A | B |
| 3 | 3 | 3 | 3 | 3 | 3 |
| N/A | N/A | N/A | N/A | N/A | A |
| 105 | 105 | 140 | 140 | 140 | 210 |
| 165 | 165 | 257 | 257 | 257 | 275 |
| 68 | 68 | 103 | 103 | 103 | 103 |
| 92 | 92 | 134 | 134 | 134 | 155 |
| 1.3 / 1.5 | 1.3 / 1.5 | 4.4 / 5.0 | 5.2 / 6.0 | 5.2 / 6.0 | 10.9 |
| ●Screw terminal | ●Screw terminal | ●Busbar terminal | ●Busbar terminal | ●Busbar terminal | ●Busbar terminal |
| ● | ● | ● | – | – | ● |
| ●Bar stud | ●Bar stud | ●Bar stud | ●Bar stud | ●Bar stud | ●Bar stud |
| ● | ● | ● | ● | ● | ● |
| ●(*6) | ●(*6) | ●(*6) | ●(*6) | ●(*6) | ●(*6) |
| ●(*6) | ●(*6) | ●(*6) | ●(*6) | ●(*6) | ●(*6) |
| ●(*6) | ●(*6) | ●(*6) | ●(*6) | ●(*6) | ●(*6) |
| ●(*6) | ●(*6) | ● | ● | ● | ● |
| ● | ● | ● | ● | ● | ● |
| – | – | – | – | – | ●(*9) |
| ● | ● | – | – | – | – |
| ● | ● | ● | ● | ● | ● |
| – / ● | – / ● | ● | ● | ● | ● |
| ● | ● | ●(*8) | ●(*8) | ●(*8) | ●(*8) |
| ● | ● | ● | ● | ● | ● |
| ● | ● | ● | ● | ● | ● |
| ● | ● | – | – | – | – |
| ● | ● | ● | ● | ● | ● |
| ● | ● | ● | ● | ● | ● |
| ● | ● | ● | ● | ● | ● |
| ● | ● | ● | ● | ● | ● |
| ● | ● | ● | ● | ● | ● |
| ● | ● | ● / ● | ● / ● | ● / ● | ● |
| ● | ● | ● | ● / ● | ● / ● | ● |
| – | – | – | – | – | – |
| TÜV approval | TÜV approval | Self-declaration | Self-declaration | Self-declaration | Self-declaration |
| Recognition in process | Recognition in process | Recognition in process | Recognition in process | Recognition in process | Recognition in process |
| ☆ | ☆ | ☆ | ☆ | ☆ | ☆ |
| Thermal-magnetic | Thermal-magnetic | Thermal-magnetic | Thermal-magnetic | Thermal-magnetic | Electronic (effective value detection) |
| Equipped | Equipped | Equipped | Equipped | Equipped | Equipped |
| 150 | | 158 | 164 | | 168 |

Remarks: 1. Products with rated current parenthesized are produced when an order is placed.
2. Specify "P-LT" when using a plug-in product with a lead-wire terminal block.
3. The circuit breaker has the rated short-circuit breaking capacity specified in the shaded cells.

## NF-S (Standard class)

| Frame (A) | | | | 30 | | 32 | | 50 | | | 60 | | | 63 | | |
|---|---|---|---|---|---|---|---|---|---|---|---|---|---|---|---|---|
| Model | | | | NF32-SV | | | | NF63-SV | | | | | | | | |
| Image | | | | | | | | | | | | | | | | |
| Rated current In (A) Rated ambient temperture 40°C (45°C for marine use) | | | | 3 4 (5) 6 10 15 16 20 25 (30) | | 32 | | 3 4 (5) 6 10 (15) 16 20 25 (30) 32 40 50 | | | (60) | | | 63 | | |
| Number of poles | | | | 2 | 3 | 2 | 3 | 2 | 3 | 4 | 2 | 3 | 4 | 2 | 3 | 4 |
| Rated insulation voltage Ui (V) | | | | 600 | | 600 | | 600 | | | 600 | | | 600 | | |
| Rated short-circuit breaking capacities (kA) | IEC 60947-2 EN 60947-2 (Icu/Ics) | AC | 690V | – | | – | | – | | | – | | | – | | |
| | | | 500V | 2.5/2.5 | | 2.5/2.5 | | 7.5/7.5 | | | 7.5/7.5 | | | 7.5/7.5 | | |
| | | | 440V | 2.5/2.5 | | 2.5/2.5 | | 7.5/7.5 | | | 7.5/7.5 | | | 7.5/7.5 | | |
| | | | 415V | 2.5/2.5 | | 2.5/2.5 | | 7.5/7.5 | | | 7.5/7.5 | | | 7.5/7.5 | | |
| | | | 400V | 5/5 | | 5/5 | | 7.5/7.5 | | | 7.5/7.5 | | | 7.5/7.5 | | |
| | | | 380V | 5/5 | | 5/5 | | 7.5/7.5 | | | 7.5/7.5 | | | 7.5/7.5 | | |
| | | | 230V | 7.5/7.5 | | 7.5/7.5 | | 15/15 | | | 15/15 | | | 15/15 | | |
| | | | 200V | 7.5/7.5 | | 7.5/7.5 | | 15/15 | | | 15/15 | | | 15/15 | | |
| | | DC | 250V | 2.5/2.5 (*5) | | 2.5/2.5 (*5) | | 7.5/7.5 (*5) | | | 7.5/7.5 (*5) | | | 7.5/7.5 (*5) | | |
| Rated impulse withstand voltage Uimp (kV) | | | | 8 | | 8 | | 8 | | | 8 | | | 8 | | |
| Current (*1) | | | | AC/DC compatible | | AC/DC compatible | | AC/DC compatible | | | AC/DC compatible | | | AC/DC compatible | | |
| Suitability for isolation | | | | Compatible | | Compatible | | Compatible | | | Compatible | | | Compatible | | |
| Reverse connection | | | | Possible | | Possible | | Possible | | | Possible | | | Possible | | |
| Number of operating cycles | Without current | | | 10,000 | | 10,000 | | 10,000 | | | 15,000 | | | 15,000 | | |
| | With current (440VAC) | | | 6,000 | | 6,000 | | 6,000 | | | 8,000 | | | 8,000 | | |
| Utilization category | | | | A | | A | | A | | | A | | | A | | |
| Pollution degree | | | | 3 | | 3 | | 3 | | | 3 | | | 3 | | |
| EMC environment condition (environment A or B) | | | | N/A | | N/A | | N/A | | | N/A | | | N/A | | |
| Overall dimensions (mm) | 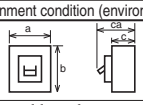 | | a | 50 | 75 | 50 | 75 | 50 | 75 | 100 | 50 | 75 | 100 | 50 | 75 | 100 |
| | | | b | 130 | | 130 | | 130 | | | 130 | | | 130 | | |
| | | | c | 68 | | 68 | | 68 | | | 68 | | | 68 | | |
| | | | ca | 90 | | 90 | | 90 | | | 90 | | | 90 | | |
| Mass of front-face type (kg) | | | | 0.45 | 0.65 | 0.45 | 0.65 | 0.5 | 0.7 | 0.9 | 0.55 | 0.75 | 1.0 | 0.55 | 0.75 | 1.0 |
| Installation and connections | Front connection (F) | | Page | ●Screw terminal | | ●Screw terminal | | ●Screw terminal | | | ●Screw terminal | | | ●Screw terminal | | |
| | Solderless (BOX) terminal (SL) | | 94 | – | | – | | – | | | – | | | – | | |
| | Rear (B) | | | ●Bar stud | | ●Round stud | | ●Round stud | | | ●Round stud | | | ●Round stud | | |
| | Plug-in (PM) | | | ● | | ● | | ● | | | ● | | | ● | | |
| Cassette-type accessories | Alarm switch (AL) | | 104 | ● (*4) | | ● (*4) | | ● (*4) | | ● | ● (*4) | | ● | ● (*4) | | ● |
| | Auxiliary switch (AX) | | | ● (*4) | | ● (*4) | | ● (*4) | | ● | ● (*4) | | ● | ● (*4) | | ● |
| | Shunt trip (SHT) | | | ● (*4) | | ● (*4) | | ● (*4) | | ● | ● (*4) | | ● | ● (*4) | | ● |
| | Undervoltage trip (UVT) | | | ● (*4) | | ● (*4) | | ● (*4) | | ● | ● (*4) | | ● | ● (*4) | | ● |
| | With lead-wire terminal block (SLT) | | 116 | ● | | ● | | ● | | ● | ● | | ● | ● | | ● |
| | Pre-alarm (PAL) | | 118 | – | | – | | – | | | – | | | – | | |
| External accessories | Enclosure | Closed (S) | 132 | ● | | ● | | ● | | – | ● | | – | ● | | – |
| | | Dustproof (I) | | ● | | ● | | ● | | – | ● | | – | ● | | – |
| | | Waterproof (W) | | – | ● | – | ● | – | ● | – | – | ● | – | – | ● | – |
| | Electrical operation device (NFM) | | 135 | – | | – | | – | | | – | | | – | | |
| | Mechanical interlock (MI) (*7) | Panel mounting | 131 | ● | | ● | | ● | | ● | ● | | ● | ● | | ● |
| | | Breaker mounting | | ● | | ● | | ● | | – | ● | | – | ● | | – |
| | Handle lock device | LC | 129 | ● | | ● | | ● | | | ● | | | ● | | |
| | | HL | | ● | | ● | | ● | | | ● | | | ● | | |
| | | HL-S | | ● | | ● | | ● | | | ● | | | ● | | |
| | External operating handle | (F) | 119 | ● | | ● | | ● | | | ● | | | ● | | |
| | | (V) | | ● | | ● | | ● | | | ● | | | ● | | |
| | Terminal cover (TC-L, TC-S, TTC, BTC, PTC) | | 123 | ● | | ● | | ● | | ● | ● | | ● | ● | | ● |
| | Rear stud (B-ST) | | 96 | ● | | ● | | ● | | | ● | | | ● | | |
| | Plug-in (PM) | | | ● | | ● | | ● | | ● | ● | | ● | ● | | ● |
| | IEC 35mm rail mounting adapters | | 139 | ● | | ● | | ● | | – | ● | | – | ● | | – |
| CE marking | | | | Self-declaration | | Self-declaration | | Self-declaration | | | Self-declaration | | | Self-declaration | | |
| CCC recognition | | | | Recognition in process | | Recognition in process | | Recognition in process | | | Recognition in process | | | Recognition in process | | |
| Marine use approval (NK, LR, ABS, GL) | | | | ☆ | | ☆ | | ☆ | | – | ☆ | | – | ☆ | | – |
| Automatic tripping device | | | | Thermal-magnetic | | Thermal-magnetic | | Thermal-magnetic | | | Thermal-magnetic | | | Thermal-magnetic | | |
| Trip button | | | | Equipped | | Equipped | | Equipped | | | Equipped | | | Equipped | | |
| Page of Characteristics and dimensions | | | | 144 | | | | 144 | | | | | | | | |

Notes:
*1 The trip action characteristics differ between AC and DC for products that are compatible with both AC and DC.
*2 In case of a current rating of 100A, it does not specify NK rating.
*3 Use two poles for three- and four-pole products. In this case, do not use the neutral pole of the four-pole products. If wired as shown on the right, three and four poles can be used for up to 400 and 500VDC, respectively. (In case of NF250-SV, three and four poles can be used for up to 500 and 600VDC)
*4 The cassette type design makes it easy for customer to install. Available for installation on side below 250A frame (excluding UVT).
*5 Use two poles for three- and four-pole products. In this case, do not use the neutral pole of the four-pole products. Not available for use with connection as shown on the right.
*6 Place an order of other models in conjunction with the circuit breaker.
*7 Not isolation compatible. excluding 400 to 800A frame.

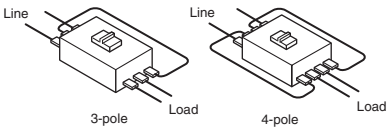

## NF-S (Standard class)

| | | | | | | | | | | | | | | | | | | | | | |
|---|---|---|---|---|---|---|---|---|---|---|---|---|---|---|---|---|---|---|---|---|---|
| 100 | | | 125 | | | 125 | | | 125 | | 160 | | | 225 | | | 250 | | |
| NF125-SV | | | | | | NF125-SGV | | | NF125-SEV | | NF160-SGV | | | NF250-SV | | | | | |
| | | | | | | | | | | | | | | | | | | | |
| (15) 16 20 (30) 32 40 50 (60) 63 (75) 80 100 | | | 125 | | | 16-20 20-25 25-32 32-40 35-50 45-63 56-80 70-100 90-125 | | | 16-32 32-63 63-125 | | 125-160 | | | (100) 125 150 160 175 200 225 (*2) | | | 250 | | |
| 2 | 3 | 4 | 2 | 3 | 4 | 2 | 3 | 4 | 3 | 4 | 2 | 3 | 4 | 2 | 3 | 4 | 2 | 3 | 4 |
| 690 | | | 690 | | | 690 | | | 690 | | 690 | | | 690 | | | 690 | | |
| 8/8 | | | 8/8 | | | 8/8 | | | 8/8 | | 8/8 | | | 8/8 | | | 8/8 | | |
| 18/18 | | | 18/18 | | | 30/30 | | | 30/30 | | 30/30 | | | 30/30 | | | 30/30 | | |
| 25/25 | | | 25/25 | | | 36/36 | | | 36/36 | | 36/36 | | | 36/36 | | | 36/36 | | |
| 30/30 | | | 30/30 | | | 36/36 | | | 36/36 | | 36/36 | | | 36/36 | | | 36/36 | | |
| 30/30 | | | 30/30 | | | 36/36 | | | 36/36 | | 36/36 | | | 36/36 | | | 36/36 | | |
| 30/30 | | | 30/30 | | | 36/36 | | | 36/36 | | 36/36 | | | 36/36 | | | 36/36 | | |
| 50/50 | | | 50/50 | | | 85/85 | | | 85/85 | | 85/85 | | | 85/85 | | | 85/85 | | |
| 50/50 | | | 50/50 | | | 85/85 | | | 85/85 | | 85/85 | | | 85/85 | | | 85/85 | | |
| 40/40 (*3) | | | 40/40 (*3) | | | 20/20 (300V) (*3) | | | – | | 20/20 (300V) (*3) | | | 20/20 (300V) (*3) | | | 20/20 (300V) (*3) | | |
| 8 | | | 8 | | | 8 | | | 8 | | 8 | | | 8 | | | 8 | | |
| AC/DC compatible | | | AC/DC compatible | | | AC/DC compatible | | | AC | | AC/DC compatible | | | AC/DC compatible (*1) | | | AC/DC compatible (*1) | | |
| Compatible | | | Compatible | | | Compatible | | | Compatible | | Compatible | | | Compatible | | | Compatible | | |
| Possible | | | Possible | | | Possible | | | Possible | | Possible | | | Possible | | | Possible | | |
| 25,000 | | | 25,000 | | | 50,000 | | | 25,000 | | 40,000 | | | 25,000 | | | 25,000 | | |
| 10,000 | | | 10,000 | | | 30,000 | | | 10,000 | | 15,000 | | | 10,000 | | | 10,000 | | |
| A | | | A | | | A | | | A | | A | | | A | | | A | | |
| 3 | | | 3 | | | 3 | | | 3 | | 3 | | | 3 | | | 3 | | |
| N/A | | | N/A | | | N/A | | | A | | N/A | | | N/A | | | N/A | | |
| 60 | 90 | 120 | 60 | 90 | 120 | 105 | | 140 | 105 | 140 | 105 | | 140 | 105 | | 140 | 105 | | 140 |
| 130 | | | 130 | | | 165 | | | 165 | | 165 | | | 165 | | | 165 | | |
| 68 | | | 68 | | | 68 | | | 68 | | 68 | | | 68 | | | 68 | | |
| 90 | | | 90 | | | 92 | | | 92 | | 92 | | | 92 | | | 92 | | |
| 0.7 | 1.0 | 1.3 | 0.7 | 1.0 | 1.3 | 1.4 | 1.6 | 2.0 | 1.7 | 2.2 | 1.4 | 1.6 | 2.0 | 1.4 | 1.6 | 2.0 | 1.4 | 1.6 | 2.0 |
| ●Screw terminal | | | ●Screw terminal | | | ●Screw terminal | | | ●Screw terminal | | ●Screw terminal | | | ●Screw terminal | | | ●Screw terminal | | |
| ● | | | ● | | | ● | | | ● | ● | ● | | | ● | | ● | ● | | ● |
| ●Bar stud | | | ●Bar stud | | | ●Bar stud | | | ●Bar stud | ●Bar stud | ●Bar stud | | | ●Bar stud | | | ●Bar stud | | |
| ● | | ● | ● | | ● | ● | | | ● | ● | ● | | | ● | | ● | ● | | ● |
| ● (*4) | | ● | ● (*4) | | ● | ● (*4) | | ● | ● (*4) | ● | ● (*4) | | ● | ● (*4) | | ● | ● (*4) | | ● |
| ● (*4) | | ● | ● (*4) | | ● | ● (*4) | | ● | ● (*4) | ● | ● (*4) | | ● | ● (*4) | | ● | ● (*4) | | ● |
| ● (*4) | | ● | ● (*4) | | ● | ● (*4) | | ● | ● (*4) | ● | ● (*4) | | ● | ● (*4) | | ● | ● (*4) | | ● |
| ● (*4) | | ● | ● (*4) | | ● | ● (*4) | | ● | ● (*4) | ● | ● (*4) | | ● | ● (*4) | | ● | ● (*4) | | ● |
| ● | | ● | ● | | ● | ● | | | ● | ● | ● | | | ● | | ● | ● | | ● |
| – | | | – | | | – | | | ● | | – | | | – | | | – | | |
| ● | | – | ● | | – | ● | | – | ● | – | ● | | – | ● | | – | ● | | – |
| ● | | – | ● | | – | ● | | – | ● | – | ● | | – | ● | | – | ● | | – |
| – | ● | – | – | ● | – | ● | | – | ● | – | ● | | – | ● | | – | ● | | – |
| – | ● | | – | ● | | ● | | | ● | | ● | | | ● | | | ● | | |
| ● | | ● | ● | | ● | ● | | | ● | ● | ● | | | ● | | ● | ● | | ● |
| ● | | – | ● | | – | ● | | | ● | – | ● | | | ● | | – | ● | | – |
| ● | | | ● | | | ● | | | ● | | ● | | | ● | | | ● | | |
| ● | | | ● | | | ● | | | ● | | ● | | | ● | | | ● | | |
| ● | | | ● | | | ● | | | ● | | ● | | | ● | | | ● | | |
| ● | | | ● | | | ● | | | ● | | ● | | | ● | | | ● | | |
| – | ● | ● | – | ● | | ● | | | ● | | ● | | | ● | | | ● | | |
| ● | | ● | ● | | ● | ● | | | ● | ● | ● | | | ● | | ● | ● | | ● |
| ● | | ● | ● | | ● | ● | | | ● | ● | ● | | | ● | | ● | ● | | ● |
| ● | | ● | ● | | ● | ● | | | ● | ● | ● | | | ● | | ● | ● | | ● |
| – | | | – | | | – | | | – | | – | | | – | | | – | | |
| Self-declaration | | | Self-declaration | | | Self-declaration | | | Self-declaration | | Self-declaration | | | TÜV approval | | Self-declaration | TÜV approval | | Self-declaration |
| Recognition in process | | | Recognition in process | | | Recognition in process | | | Recognition in process | | Recognition in process | | | Recognition in process | | | Recognition in process | | |
| ☆ | | – | ☆ | | – | ☆ (LR, ABS, GL) | | – | ☆ (LR, ABS, GL) | – | ☆ (LR, ABS, GL) | | – | ☆ | | – | ☆ | | – |
| Thermal-magnetic | | | Thermal-magnetic | | | Thermal-magnetic | | | Electronic (effective value detection) | | Thermal-magnetic | | | Thermal-magnetic | | | Thermal-magnetic | | |
| Equipped | | | Equipped | | | Equipped | | | Equipped | | Equipped | | | Equipped | | | Equipped | | |
| 146 | | | 146 | | | 154 | | | 156 | | 154 | | | 150 | | | 150 | | |

Remarks: 1. Products with rated current parenthesized are produced when an order is placed.
2. Specify "P-LT" when using a plug-in product with a lead-wire terminal block.
3. The circuit breaker has the rated short-circuit breaking capacity specified in the shaded cells.

## NF-S (Standard class)

| Frame (A) | 250 | | | 250 | | 400 | | | 400 | | 600 | | | 630 | | |
|---|---|---|---|---|---|---|---|---|---|---|---|---|---|---|---|---|
| Model | NF250-SGV | | | NF250-SEV | | NF400-SW | | | NF400-SEW | | NF630-SW | | | | | |
| Image | | | | | | | | | | | | | | | | |
| Rated current In (A) Rated ambient temperture 40°C (45°C for marine use) | 125-160 140-200 175-250 | | | 80-160 125-250 | | 250 300 350 400 | | | Adjustable 200 225 250 300 350 400 | | 500 600 | | | 630 | | |
| Number of poles | 2 | 3 | 4 | 3 | 4 | 2 | 3 | 4 | 3 | 4 | 2 | 3 | 4 | 2 | 3 | 4 |
| Rated insulation voltage Ui (V) | 690 | | | 690 | | 690 | | | 690 | | 690 | | | 690 | | |
| Rated short-circuit breaking capacities (kA) — IEC 60947-2 EN 60947-2 (Icu/Ics) — AC 690V | 8/8 | | | 8/8 | | 10/10 | | | 10/10 | | 10/10 | | | 10/10 | | |
| AC 500V | 30/30 | | | 30/30 | | 30/30 | | | 30/30 | | 30/30 | | | 30/30 | | |
| AC 440V | 36/36 | | | 36/36 | | 42/42 | | | 42/42 | | 42/42 | | | 42/42 | | |
| AC 415V | 36/36 | | | 36/36 | | 45/45 | | | 50/50 | | 50/50 | | | 50/50 | | |
| AC 400V | 36/36 | | | 36/36 | | 45/45 | | | 50/50 | | 50/50 | | | 50/50 | | |
| AC 380V | 36/36 | | | 36/36 | | 50/50 | | | 50/50 | | 50/50 | | | 50/50 | | |
| AC 230V | 85/85 | | | 85/85 | | 85/85 | | | 85/85 | | 85/85 | | | 85/85 | | |
| AC 200V | 85/85 | | | 85/85 | | 85/85 | | | 85/85 | | 85/85 | | | 85/85 | | |
| DC 250V | 20/20 (300V) (*2) | | | – | | 40/40 (*2) | | | – | | 40/40 (*2) | | | 40/40 (*2) | | |
| Rated impulse withstand voltage Uimp (kV) | 8 | | | 8 | | 8 | | | 8 | | 8 | | | 8 | | |
| Current | AC/DC compatible | | | AC | | AC/DC compatible | | | AC | | AC/DC compatible | | | AC/DC compatible | | |
| Suitability for isolation | Compatible | | | Compatible | | Compatible | | | Compatible | | Compatible | | | Compatible | | |
| Reverse connection | Possible | | | Possible | | Possible | | | Possible | | Possible | | | Possible | | |
| Number of operating cycles — Without current | 25,000 | | | 25,000 | | 6,000 | | | 6,000 | | 6,000 | | | 6,000 | | |
| Number of operating cycles — With current (440VAC) | 10,000 | | | 10,000 | | 1,000 | | | 1,000 | | 1,000 | | | 1,000 | | |
| Utilization category | A | | | A | | A | | | B | | A | | | A | | |
| Rated short time with stand current Icw (kA) at 0.25s | – | | | – | | – | | | 5 | | – | | | – | | |
| Pollution degree | 3 | | | 3 | | 3 | | | 3 | | 3 | | | 3 | | |
| EMC environment condition (environment A or B) | N/A | | | A | | N/A | | | A | | N/A | | | N/A | | |
| Overall dimensions (mm) — a | 105 | | 140 | 105 | 140 | 140 | | 185 | 140 | 185 | 140 | | 185 | 140 | | 185 |
| Overall dimensions (mm) — b | 165 | | | 165 | | 257 | | | 257 | | 257 | | | 257 | | |
| Overall dimensions (mm) — c | 68 | | | 68 | | 103 | | | 103 | | 103 | | | 103 | | |
| Overall dimensions (mm) — ca | 92 | | | 92 | | 155 | | | 155 | | 155 | | | 155 | | |
| Mass of front-face type (kg) | 1.4 | 1.6 | 2.0 | 1.7 | 2.2 | 4.6 | 5.2 | 6.8 | 6.0 | 7.6 | 5.4 | 6.2 | 8.0 | 5.4 | 6.2 | 8.0 |
| Installation and connections — Front connection (F) — Page | ● | | | ●Screw terminal | ●Screw terminal | ●Busbar terminal | | | ●Busbar terminal | | ●Busbar terminal | | | ●Busbar terminal | | |
| Solderless (BOX) terminal (SL) — 94 | ● | | | ● | ● | ● | ● | ● | ● | ● | ● | ● | ● | ● | ● | ● |
| Rear (B) — 94 | ●Bar stud | | | ●Bar stud | ●Bar stud | ●Bar stud | ●Bar stud | ●Bar stud | ●Bar stud | ●Bar stud | ●Bar stud | ●Bar stud | ●Bar stud | ●Bar stud | ●Bar stud | ●Bar stud |
| Plug-in (PM) — 94 | ● | | | ● | ● | ● | | ● | ● | ● | ● | | ● | ● | | ● |
| Cassette-type accessories — Alarm switch (AL) — 104 | ● (*3) | | ● | ● (*3) | ● | ● (*3) | | ● | ● (*3) | ● | ● (*3) | | ● | ● (*3) | | ● |
| Auxiliary switch (AX) — 104 | ● (*3) | | ● | ● (*3) | ● | ● (*3) | | ● | ● (*3) | ● | ● (*3) | | ● | ● (*3) | | ● |
| Shunt trip (SHT) — 104 | ● (*3) | | ● | ● (*3) | ● | ● (*3) | | ● | ● (*3) | ● | ● (*3) | | ● | ● (*3) | | ● |
| Undervoltage trip (UVT) — 104 | ● (*3) | | ● | ● (*3) | ● | ● | | ● | ● | ● | ● | | ● | ● | | ● |
| With lead-wire terminal block (SLT) — 116 | ● | | | ● | ● | ● | | ● | ● | ● | ● | | ● | ● | | ● |
| Pre-alarm (PAL) — 118 | – | | | ● | | – | | | ● (*5) | | – | | | – | | |
| External accessories — Enclosure — Closed (S) — 132 | ● | | – | ● | – | – | | | – | | – | | | – | | |
| Enclosure — Dustproof (I) — 132 | ● | | – | ● | – | ● | | – | ● | – | ● | | – | ● | | – |
| Enclosure — Waterproof (W) — 132 | ● | | – | ● | – | ● | | – | ● | – | ● | | – | ● | | – |
| Electrical operation device (NFM) — 135 | ● | | | ● | | ● (*6) | | | ● (*6) | | ● (*6) | | | ● (*6) | | |
| Mechanical interlock (MI) (*7) — Panel mounting — 131 | ● | | | ● | ● | ● | | ● | ● | ● | ● | | ● | ● | | ● |
| Mechanical interlock (MI) (*7) — Breaker mounting — 131 | ● | | | ● | – | ● | | – | ● | – | ● | | – | ● | | – |
| Handle lock device — LC — 129 | ● | | | ● | | – | | | – | | – | | | – | | |
| Handle lock device — HL — 129 | ● | | | ● | | ● | | | ● | | ● | | | ● | | |
| Handle lock device — HL-S — 129 | ● | | | ● | | ● | | | ● | | ● | | | ● | | |
| External operating handle (F) — 119 | ● | | | ● | | ● | | | ● | | ● | | | ● | | |
| External operating handle (V) — 119 | ● | | | ● | | ● | | | ● | | ● | | | ● | | |
| Terminal cover (TC-L, TC-S, TTC, BTC, PTC) — 123 | ● | | | ● | ● | ● | | ● | ● | ● | ● | | ● | ● | | ● |
| Rear stud (B-ST) — 96 | ● | | | ● | ● | ● | ● | | ● | | ● | ● | ● | ● | ● | ● |
| Plug-in (PM) — 96 | ● | | | ● | ● | ● | ● | ● | ● | ● | ● | ● | ● | ● | ● | ● |
| IEC 35mm rail mounting adapters — 139 | – | | | – | | – | | | – | | – | | | – | | |
| CE marking | Self-declaration | | | Self-declaration | | Self-declaration | | | Self-declaration | | Self-declaration | | | Self-declaration | | |
| CCC recognition | Recognition in process | | | Recognition in process | | Recognition in process | | | Recognition in process | | Recognition in process | | | Recognition in process | | |
| Marine use approval (NK, LR, ABS, GL) | ☆ (LR, ABS, GL) | | – | ☆ (LR, ABS, GL) | – | ☆ | | – | ☆ | – | ☆ | | – | ☆ | | – |
| Automatic tripping device | Thermal-magnetic | | | Electronic (effective value detection) | | Thermal-magnetic | | | Electronic (effective value detection) | | Thermal-magnetic | | | Thermal-magnetic | | |
| Trip button | Equipped | | | Equipped | | Equipped | | | Equipped | | Equipped | | | Equipped | | |
| Page of Characteristics and dimensions | 154 | | | 156 | | 158 | | | 160 | | 164 | | | | | |

Notes:
*1 The trip action characteristics differ between AC and DC for products that are compatible with both AC and DC.
*2 Use two poles for three- and four-pole products. In this case, do not use the neutral pole of the four-pole products. If wired as shown on the right, three and four poles can be used for up to 400 and 500VDC, respectively.
*3 The cassette type design makes it easy for customer to install. Available for installation on side below 250A frame (excluding UVT).
*4 Use two poles for three- and four-pole products. In this case, do not use the neutral pole of the four-pole products. Not available for use with connection as shown on the right.
*5 Solid state relay output is option. Please specify if other output is necessary. (Standard type is thus SLT equipped) AS for flush plate type, an outline differs from a standard.
*6 Place an order of other models in conjunction with the circuit breaker.
*7 Not isolation compatible. excluding 400 to 800A frame.

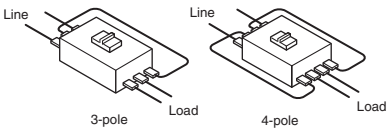

## NF-S (Standard class)

| | | | | | | | | |
|---|---|---|---|---|---|---|---|---|
| 630 | 800 | 800 | 1000 | 1250 | 1200 | 1600 | 1600 |
| NF630-SEW | NF800-SEW | NF800-SDW | NF1000-SEW | NF1250-SEW | NF1250-SDW | NF1600-SEW | NF1600-SDW |
| | | | | | | | |
| Adjustable 300 350 400 500 600 630 | Adjustable 400 450 500 600 700 800 | (700) 800 | Adjustable 500 600 700 800 900 1000 | Adjustable 600 700 800 1000 1200 1250 | 1000 1250 | Adjustable 800 1000 1200 1400 1500 1600 | 1600 |
| 3 4 | 3 4 | 2 | 3 4 | 3 4 | 2 | 3 4 | 2 |
| 690 | 690 | 690 | 690 | 690 | 690 | 690 | 690 |
| 10/10 | 10/10 | – | 25/13 | 25/13 | – | 25/13 | – |
| 30/30 | 30/30 | – | 65/33 | 65/33 | – | 65/33 | – |
| 42/42 | 42/42 | – | 85/43 | 85/43 | – | 85/43 | – |
| 50/50 | 50/50 | – | 85/43 | 85/43 | – | 85/43 | – |
| 50/50 | 50/50 | – | 85/43 | 85/43 | – | 85/43 | – |
| 50/50 | 50/50 | – | 85/43 | 85/43 | – | 85/43 | – |
| 85/85 | 85/85 | – | 125/63 | 125/63 | – | 125/63 | – |
| 85/85 | 85/85 | – | 125/63 | 125/63 | – | 125/63 | – |
| – | – | 40/40 | – | – | 40/20 | – | 40/20 |
| 8 | 8 | 8 | 8 | 8 | 8 | 8 | 8 |
| AC | AC | DC | AC | AC | DC | AC | DC |
| Compatible | Compatible | Compatible | Compatible | Compatible | Compatible | Compatible | Compatible |
| Possible | Possible | Possible | Possible | Possible | Possible | Possible | Possible |
| 6,000 | 4,000 | 4,000 | 3,000 | 3,000 | 3,000 | 3,000 | 3,000 |
| 1,000 | 500 | 500 | 500 | 500 | 500 | 500 | 500 |
| B | B | A | B | B | A | B | B |
| 7.6 | 9.6 | – | 20 at 0.1 | 20 at 0.1 | – | 20 at 0.1 | – |
| 3 | 3 | 3 | 3 | 3 | 3 | 3 | 3 |
| A | A | N/A | A | A | N/A | A | A |
| 140 185 | 210 280 | 210 | 210 280 | 210 280 | 210 | 210 280 | 210 |
| 257 | 275 | 275 | 406 | 406 | 406 | 406 | 406 |
| 103 | 103 | 103 | 140 | 140 | 140 | 140 | 140 |
| 155 | 155 | 155 | 190 | 190 | 190 | 190 | 190 |
| 6.5 8.3 | 10.9 14.2 | 9.0 | 23.5 30.7 | 23.5 30.7 | 22.0 | 34.5 41.2 | 32.0 |
| ●Busbar terminal | ●Busbar terminal | ●Busbar terminal | ●Busbar terminal ●Busbar terminal | ●Busbar terminal ●Busbar terminal | ●Busbar terminal | ●Busbar terminal ●Busbar terminal | ●Busbar terminal |
| ● ● | ● ● | ● | ● ● | ● ● | ● | ● | ● |
| ●Bar stud ●Bar stud | ●Bar stud ●Bar stud | ●Bar stud | ●Bar stud ●Bar stud | ●Bar stud ●Bar stud | ●Bar stud | ●Bar stud ●Bar stud | ●Bar stud |
| ● ● | ● ● | ● | ● – | ● – | ● | – | – |
| ● (*3) ● | ● (*3) ● | ● | ● ● | ● ● | ● | ● ● | ● |
| ● (*3) ● | ● (*3) ● | ● | ● ● | ● ● | ● | ● ● | ● |
| ● (*3) ● | ● (*3) ● | ● | ● ● | ● ● | ● | ● ● | ● |
| ● ● | ● ● | ● | ● ● | ● ● | ● | ● ● | ● |
| ● ● | ● ● | ● | ● ● | ● ● | ● | ● ● | ● |
| ● (*5) | ● (*5) | – | ● (*5) | ● (*5) | – | ● (*5) | – |
| – | – | – | – | – | – | – | – |
| ● – | ● – | ● | – – | – – | – | – | – |
| ● – | ● – | ● | – – | – – | – | – | – |
| ● (*6) | ● (*6) | ●(*6) | ● (*6) | ● (*6) | ● (*6) | ● (*6) | ● (*6) |
| ● ● | ● ● | ● | ● | ● | ● | ● | ● |
| ● ● | ● ● | ● | – | – | – | – | – |
| – | – | – | – | – | – | – | – |
| ● | ● | ● | ● | ● | ● | ● | ● |
| ● | ● | ● | – | – | – | – | – |
| ● | ● | ● | ● ● | ● ● | ● | ● ● | ● |
| ● | ● | ● | – | – | – | – | – |
| ● ● | ● ● | ● | ● | ● | ● | – | – |
| ● ● | ● ● | ● | – | – | – | – | – |
| ● ● | ● | ● | ● | ● | ● | – | – |
| – | – | – | – | – | – | – | – |
| Self-declaration | Self-declaration | Self-declaration | Self-declaration | Self-declaration | Self-declaration | Self-declaration | Self-declaration |
| Recognition in process | Recognition in process | Recognition in process | Recognition in process | Recognition in process | – | Recognition in process | – |
| ☆ – | ☆ – | – | ☆ – | ☆ – | – | – | – |
| Electronic (effective value detection) | Electronic (effective value detection) | Thermal-magnetic | Electronic (effective value detection) | Electronic (effective value detection) | Thermal-magnetic | Electronic (effective value detection) | magnetic |
| Equipped | Equipped | Equipped | Equipped | Equipped | Equipped | Equipped | Equipped |
| 166 | 168 | 170 | 174 | 174 | 176 | 178 | 180 |

Remarks: 1. Products with rated current parenthesized are produced when an order is placed.
2. Specify "P-LT" when using a plug-in product with a lead-wire terminal block.
3. The circuit breaker has the rated short-circuit breaking capacity specified in the shaded cells.

## NF-L / NF-H / NF-R (High-performance class)

| Frame (A) | 50 | | | 60 | | | 63 | | | 100 | | | 125 | | | 125 | | | 125 | | | 125 | |
|---|---|---|---|---|---|---|---|---|---|---|---|---|---|---|---|---|---|---|---|---|---|---|---|
| Model | NF63-HV | | | | | | | | | NF125-HV | | | | | | NF125-LGV | | | NF125-HGV | | | NF125-RGV | |
| Image | | | | | | | | | | | | | | | | | | | | | | Available soon | |
| Rated current In (A) Rated ambient temperture 40°C (45°C for marine use) | 10 15 16 20 25 30 32 40 50 | | | 60 | | | (63) | | | 15 16 20 30 32 40 50 60 63 75 80 100 | | | 125 | | | 16-20 20-25 25-32 32-40 35-50 45-63 56-80 70-100 90-125 | | | 16-20 20-25 25-32 32-40 35-50 45-63 56-80 70-100 90-125 | | | 16-20 20-25 25-32 32-40 40-50 50-63 63-80 80-100 100-125 | |
| Number of poles | 2 | 3 | 4 | 2 | 3 | 4 | 2 | 3 | 4 | 2 | 3 | 4 | 2 | 3 | 4 | 2 | 3 | 4 | 2 | 3 | 4 | 2 | 3 |
| Rated insulation voltage Ui (V) | 690 | | | 690 | | | 690 | | | 690 | | | 690 | | | 690 | | | 690 | | | 690 | |
| Rated short-circuit breaking capacities (kA) — IEC 60947-2 EN 60947-2 (Icu/Ics) — AC 690V | 2.5/2.5 | | | 2.5/2.5 | | | 2.5/2.5 | | | 10/8 | | | 10/8 | | | 8/8 | | | 10/8 | | | – | |
| AC 500V | 7.5/7.5 | | | 7.5/7.5 | | | 7.5/7.5 | | | 30/23 | | | 30/23 | | | 36/36 | | | 50/38 | | | – | |
| AC 440V | 10/8 | | | 10/8 | | | 10/8 | | | 50/38 | | | 50/38 | | | 50/50 | | | 65/65 | | | 125/125 | |
| AC 415V | 10/8 | | | 10/8 | | | 10/8 | | | 50/38 | | | 50/38 | | | 50/50 | | | 70/70 | | | 150/150 | |
| AC 400V | 10/8 | | | 10/8 | | | 10/8 | | | 50/38 | | | 50/38 | | | 50/50 | | | 75/75 | | | 150/150 | |
| AC 380V | 10/8 | | | 10/8 | | | 10/8 | | | 50/38 | | | 50/38 | | | 50/50 | | | 75/75 | | | 150/150 | |
| AC 230V | 25/19 | | | 25/19 | | | 25/19 | | | 100/75 | | | 100/75 | | | 90/90 | | | 100/100 | | | 150/150 | |
| AC 200V | 25/19 | | | 25/19 | | | 25/19 | | | 100/75 | | | 100/75 | | | 90/90 | | | 100/100 | | | 150/150 | |
| DC 250V | 7.5/7.5 (*5) | | | 7.5/7.5 (*5) | | | 7.5/7.5 (*5) | | | – | | | – | | | 20/20 (300V) (*2) | | | 40/40 (300V) (*2) | | | – | |
| Rated impulse withstand voltage Uimp (kV) | 8 | | | 8 | | | 8 | | | 8 | | | 8 | | | 8 | | | 8 | | | 8 | |
| Current | AC/DC compatible (*1) | | | AC/DC compatible (*1) | | | AC/DC compatible (*1) | | | AC | | | AC | | | AC/DC compatible | | | AC/DC compatible | | | AC | |
| Suitability for isolation | Compatible | | | Compatible | | | Compatible | | | Compatible | | | Compatible | | | Compatible | | | Compatible | | | Compatible | |
| Reverse connection | Possible | | | Possible | | | Possible | | | Possible | | | Possible | | | Possible | | | Possible | | | Possible | |
| Number of operating cycles — Without current | 15,000 | | | 15,000 | | | 15,000 | | | 25,000 | | | 25,000 | | | 50,000 | | | 50,000 | | | 50,000 | |
| Number of operating cycles — With current (440VAC) | 8,000 | | | 8,000 | | | 8,000 | | | 10,000 | | | 10,000 | | | 30,000 | | | 30,000 | | | 30,000 | |
| Utilization category | A | | | A | | | A | | | A | | | A | | | A | | | A | | | A | |
| Pollution degree | 3 | | | 3 | | | 3 | | | 3 | | | 3 | | | 3 | | | 3 | | | 3 | |
| EMC environment condition (environment A or B) | N/A | | | N/A | | | N/A | | | N/A | | | N/A | | | N/A | | | N/A | | | N/A | |
| Overall dimensions (mm) — a | 50 | 75 | 100 | 50 | 75 | 100 | 50 | 75 | 100 | 90 | | 120 | 90 | | 120 | 105 | | 140 | 105 | | 140 | 105 | |
| b | 130 | | | 130 | | | 130 | | | 130 | | | 130 | | | 165 | | | 165 | | | 165 | |
| c | 68 | | | 68 | | | 68 | | | 68 | | | 68 | | | 68 | | | 68 | | | 68 | |
| ca | 90 | | | 90 | | | 90 | | | 90 | | | 90 | | | 92 | | | 92 | | | 92 | |
| Mass of front-face type (kg) | 0.5 | 0.7 | 0.9 | 0.55 | 0.75 | 1.0 | 0.55 | 0.75 | 1.0 | 0.8 | 1.0 | 1.3 | 0.8 | 1.0 | 1.3 | 1.4 | 1.6 | 2.0 | 1.4 | 1.6 | 2.0 | 1.5 | 1.8 |
| Installation and connections — Front connection (F) — Page | ●Screw terminal | | | ●Screw terminal | | | ●Screw terminal | | | ●Screw terminal | | | ●Screw terminal | | | ● | | | ● | | | ●Screw terminal | |
| Solderless (BOX) terminal (SL) — 94 | ● | | | ● | | | ● | | | ● | | | ● | | | ● | | | ● | | | ● | |
| Rear (B) — 94 | ●Round stud | | | ●Round stud | | | ●Round stud | | | ●Bar stud | | | ●Bar stud | | | ●Bar stud | | | ●Bar stud | | | ●Bar stud | |
| Plug-in (PM) — 94 | ● | | | ● | | | ● | | | ● | | ● | ● | | ● | ● | | | ● | | | ● | |
| Cassette-type accessories — Alarm switch (AL) — 104 | ● (*3) | | ● | ● (*3) | | ● | ● (*3) | | ● | ● (*3) | | ● | ● (*3) | | ● | ● (*3) | | ● | ● (*3) | | ● | ● (*3) | |
| Auxiliary switch (AX) — 104 | ● (*3) | | ● | ● (*3) | | ● | ● (*3) | | ● | ● (*3) | | ● | ● (*3) | | ● | ● (*3) | | ● | ● (*3) | | ● | ● (*3) | |
| Shunt trip (SHT) — 104 | ● (*3) | | ● | ● (*3) | | ● | ● (*3) | | ● | ● (*3) | | ● | ● (*3) | | ● | ● (*3) | | ● | ● (*3) | | ● | ● (*3) | |
| Undervoltage trip (UVT) — 104 | ● (*3) | | ● | ● (*3) | | ● | ● (*3) | | ● | ● (*3) | | ● | ● (*3) | | ● | ● (*3) | | ● | ● (*3) | | ● | ● (*3) | |
| With lead-wire terminal block (SLT) — 116 | ● | | ● | ● | | ● | ● | | ● | ● | | ● | ● | | ● | ● | | | ● | | | ● | |
| Pre-alarm (PAL) — 118 | – | | | – | | | – | | | – | | | – | | | – | | | – | | | – | |
| External accessories — Enclosure — Closed (S) — 132 | ● | | – | ● | | – | ● | | – | ● | | – | ● | | – | ● | | – | – | | | – | |
| Enclosure — Dustproof (I) — 132 | ● | | – | ● | | – | ● | | – | ● | | – | ● | | – | ● | | – | ● | | – | – | |
| Enclosure — Waterproof (W) — 132 | – | ● | – | – | ● | – | – | ● | – | ● | | – | ● | | – | ● | | – | ● | | – | – | |
| Electrical operation device (NFM) — 135 | – | | | – | | | – | | | ● | | | ● | | | ● | | | ● | | | ● | |
| Mechanical interlock (MI) (*4) — Panel mounting — 131 | ● | | ● | ● | | ● | ● | | ● | ● | | ● | ● | | ● | ● | | | ● | | | ● | |
| Mechanical interlock (MI) (*4) — Breaker mounting — 131 | ● | | – | ● | | – | ● | | – | ● | | – | ● | | – | ● | | | ● | | | ● | |
| Handle lock device — LC — 129 | ● | | | ● | | | ● | | | ● | | | ● | | | ● | | | ● | | | ● | |
| Handle lock device — HL — 129 | ● | | | ● | | | ● | | | ● | | | ● | | | ● | | | ● | | | ● | |
| Handle lock device — HL-S — 129 | ● | | | ● | | | ● | | | ● | | | ● | | | ● | | | ● | | | ● | |
| External operating handle (F) — 119 | ● | | | ● | | | ● | | | ● | | | ● | | | ● | | | ● | | | ● | |
| External operating handle (V) — 119 | ● | | | ● | | | ● | | | ● | | | ● | | | ● | | | ● | | | ● | |
| Terminal cover (TC-L, TC-S, TTC, BTC, PTC) — 123 | ● | | ● | ● | | ● | ● | | ● | ● | | ● | ● | | ● | ● | | | ● | | | ● | |
| Rear stud (B-ST) — 96 | ● | | | ● | | | ● | | | ● | ● | ● | ● | ● | ● | ● | | | ● | | | – | |
| Plug-in (PM) — 96 | ● | | ● | ● | | ● | ● | | ● | ● | ● | ● | ● | ● | ● | ● | | | ● | | | ● | |
| IEC 35mm rail mounting adapters — 139 | ● | | – | ● | | – | ● | | – | – | | | – | | | – | | | – | | | – | |
| CE marking | Self-declaration | | | Self-declaration | | | Self-declaration | | | Self-declaration | | | Self-declaration | | | Self-declaration | | | Self-declaration | | | Self-declaration | |
| CCC recognition | Recognition in process | | | Recognition in process | | | Recognition in process | | | Recognition in process | | | Recognition in process | | | Recognition in process | | | Recognition in process | | | Recognition in process | |
| Marine use approval (NK, LR, ABS, GL) | ☆ | | – | ☆ | | – | ☆ | | – | ☆ | | – | ☆ | | – | ☆ (LR, ABS, GL) | | – | ☆ (LR, ABS, GL) | | – | ☆ (LR, ABS, GL) | |
| Automatic tripping device | Thermal-magnetic | | | Thermal-magnetic | | | Thermal-magnetic | | | Thermal-magnetic | | | Thermal-magnetic | | | Thermal-magnetic | | | Thermal-magnetic | | | Thermal-magnetic | |
| Trip button | Equipped | | | Equipped | | | Equipped | | | Equipped | | | Equipped | | | Equipped | | | Equipped | | | Equipped | |
| Page of Characteristics and dimensions | 144 | | | | | | | | | 146 | | | | | | 154 | | | 154 | | | 154 | |

Notes:
- *1 The trip action characteristics differ between AC and DC for products that are compatible with both AC and DC.
- *2 Use two poles for three- and four-pole products. In this case, do not use the neutral pole of the four-pole products. If wired as shown on the right, three and four poles can be used for up to 500 and 600VDC, respectively.
- *3 The cassette type design makes it easy for customer to install. Available for installation on side below 250A frame (excluding UVT).
- *4 Not isolation compatible, excluding 400 to 800A frame.
- *5 Use two poles for three- and four-pole products. In this case, do not use the neutral pole of the four-pole products. Not available for use with connection as shown on the right.

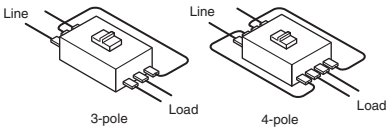

## NF-L / NF-H / NF-R (High-performance class)

| | | | | | | | | | | | | | | | | | | | | | | | | |
|---|---|---|---|---|---|---|---|---|---|---|---|---|---|---|---|---|---|---|---|---|---|---|---|---|
| 125 | | 160 | | | 160 | | | 225 | | | 250 | | | 250 | | | 250 | | | 250 | | | 250 | |
| NF125-HEV | | NF160-LGV | | | NF160-HGV | | | NF250-HV | | | | | | NF250-LGV | | | NF250-HGV | | | NF250-RGV | | | | |
| | | | | | | | | | | | | | | | | | | | | Available soon | | | | |
| 16-32 32-63 63-125 | | 125-160 | | | 125-160 | | | 125 150 160 175 200 225 | | | 250 | | | 125-160 140-200 175-250 | | | 125-160 140-200 175-250 | | | 125-160 160-200 200-250 | | | | |
| 3 | 4 | 2 | 3 | 4 | 2 | 3 | 4 | 2 | 3 | 4 | 2 | 3 | 4 | 2 | 3 | 4 | 2 | 3 | 4 | 2 | 3 | | | |
| 690 | | 690 | | | 690 | | | 690 | | | 690 | | | 690 | | | 690 | | | 690 | | | | |
| 10/8 | | 8/8 | | | 10/8 | | | 10/8 | | | 10/8 | | | 8/8 | | | 10/8 | | | – | | | | |
| 50/38 | | 36/36 | | | 50/38 | | | 50/38 | | | 50/38 | | | 36/36 | | | 50/38 | | | – | | | | |
| 65/65 | | 50/50 | | | 65/65 | | | 65/65 | | | 65/65 | | | 50/50 | | | 65/65 | | | 125/125 | | | | |
| 70/70 | | 50/50 | | | 70/70 | | | 70/70 | | | 70/70 | | | 50/50 | | | 70/70 | | | 150/150 | | | | |
| 75/75 | | 50/50 | | | 75/75 | | | 75/75 | | | 75/75 | | | 50/50 | | | 75/75 | | | 150/150 | | | | |
| 75/75 | | 50/50 | | | 75/75 | | | 75/75 | | | 75/75 | | | 50/50 | | | 75/75 | | | 150/150 | | | | |
| 100/100 | | 90/90 | | | 100/100 | | | 100/100 | | | 100/100 | | | 90/90 | | | 100/100 | | | 150/150 | | | | |
| 100/100 | | 90/90 | | | 100/100 | | | 100/100 | | | 100/100 | | | 90/90 | | | 100/100 | | | 150/150 | | | | |
| – | | 20/20 (300V) (*2) | | | 40/40 (300V) (*2) | | | 40/40 (300V) (*2) | | | 40/40 (300V) (*2) | | | 20/20 (300V) (*2) | | | 40/40 (300V) (*2) | | | – | | | | |
| 8 | | 8 | | | 8 | | | 8 | | | 8 | | | 8 | | | 8 | | | 8 | | | | |
| AC | | AC/DC compatible | | | AC/DC compatible | | | AC/DC compatible (*1) | | | AC/DC compatible (*1) | | | AC/DC compatible | | | AC/DC compatible | | | AC | | | | |
| Compatible | | Compatible | | | Compatible | | | Compatible | | | Compatible | | | Compatible | | | Compatible | | | Compatible | | | | |
| Possible | | Possible | | | Possible | | | Possible | | | Possible | | | Possible | | | Possible | | | Possible | | | | |
| 25,000 | | 40,000 | | | 40,000 | | | 25,000 | | | 25,000 | | | 25,000 | | | 25,000 | | | 25,000 | | | | |
| 10,000 | | 15,000 | | | 15,000 | | | 10,000 | | | 10,000 | | | 10,000 | | | 10,000 | | | 10,000 | | | | |
| A | | A | | | A | | | A | | | A | | | A | | | A | | | A | | | | |
| 3 | | 3 | | | 3 | | | 3 | | | 3 | | | 3 | | | 3 | | | 3 | | | | |
| A | | N/A | | | N/A | | | N/A | | | N/A | | | N/A | | | N/A | | | N/A | | | | |
| 105 | 140 | 105 | | 140 | 105 | | 140 | 105 | | 140 | 105 | | 140 | 105 | | 140 | 105 | | 140 | 105 | | | | |
| 165 | | 165 | | | 165 | | | 165 | | | 165 | | | 165 | | | 165 | | | 165 | | | | |
| 68 | | 68 | | | 68 | | | 68 | | | 68 | | | 68 | | | 68 | | | 68 | | | | |
| 92 | | 92 | | | 92 | | | 92 | | | 92 | | | 92 | | | 92 | | | 92 | | | | |
| 1.7 | 2.2 | 1.4 | 1.6 | 2.0 | 1.4 | 1.6 | 2.0 | 1.4 | 1.6 | 2.0 | 1.4 | 1.6 | 2.0 | 1.4 | 1.6 | 2.0 | 1.4 | 1.6 | 2.0 | 1.5 | 1.8 | | | |
| ●Screw terminal | ●Screw terminal | ●Screw terminal | | | ●Screw terminal | | | ●Screw terminal | | | ●Screw terminal | | | ●Screw terminal | | | ●Screw terminal | | | ●Busbar terminal | | | | |
| ● | ● | ● | | | ● | | | ● | | ● | ● | | ● | ● | | | ● | | | ● | | | | |
| ●Bar stud | ●Bar stud | ●Bar stud | | | ●Bar stud | | | ●Bar stud | | | ●Bar stud | | | ●Bar stud | | | ●Bar stud | | | ●Bar stud | | | | |
| ● | ● | ● | | | ● | | | ● | | ● | ● | | ● | ● | | | ● | | | ● | | | | |
| ● (*3) | ● | ● (*3) | | ● | ● (*3) | | ● | ● (*3) | | ● | ● (*3) | | ● | ● (*3) | | ● | ● (*3) | | ● | ● (*3) | | | | |
| ● (*3) | ● | ● (*3) | | ● | ● (*3) | | ● | ● (*3) | | ● | ● (*3) | | ● | ● (*3) | | ● | ● (*3) | | ● | ● (*3) | | | | |
| ● (*3) | ● | ● (*3) | | ● | ● (*3) | | ● | ● (*3) | | ● | ● (*3) | | ● | ● (*3) | | ● | ● (*3) | | ● | ● (*3) | | | | |
| ● (*3) | ● | ● (*3) | | ● | ● (*3) | | ● | ● (*3) | | ● | ● (*3) | | ● | ● (*3) | | ● | ● (*3) | | ● | ● (*3) | | | | |
| ● | ● | ● | | | ● | | | ● | | ● | ● | | ● | ● | | | ● | | | ● | | | | |
| ● | | – | | | – | | | – | | | – | | | – | | | – | | | – | | | | |
| – | | ● | | – | – | | | – | | | – | | | ● | | – | – | | | – | | | | |
| ● | – | ● | | – | ● | | – | ● | | – | ● | | – | ● | | – | ● | | – | – | | | | |
| ● | – | ● | | – | ● | | – | ● | | – | ● | | – | ● | | – | ● | | – | – | | | | |
| ● | | ● | | | ● | | | ● | | | ● | | | ● | | | ● | | | ● | | | | |
| ● | ● | ● | | | ● | | | ● | | ● | ● | | ● | ● | | | ● | | | ● | | | | |
| ● | – | ● | | | ● | | | ● | | – | ● | | – | ● | | | ● | | | ● | | | | |
| ● | | ● | | | ● | | | ● | | | ● | | | ● | | | ● | | | ● | | | | |
| ● | | ● | | | ● | | | ● | | | ● | | | ● | | | ● | | | ● | | | | |
| ● | | ● | | | ● | | | ● | | | ● | | | ● | | | ● | | | ● | | | | |
| ● | | ● | | | ● | | | ● | | | ● | | | ● | | | ● | | | ● | | | | |
| ● | | ● | | | ● | | | ● | | | ● | | | ● | | | ● | | | ● | | | | |
| ● | ● | ● | | | ● | | | ● | | ● | ● | | ● | ● | | | ● | | | ● | | | | |
| ● | ● | ● | | | ● | | | ● | | ● | ● | | ● | ● | | | ● | | | – | | | | |
| ● | ● | ● | | | ● | | | ● | | ● | ● | | ● | ● | | | ● | | | ● | | | | |
| – | | – | | | – | | | – | | | – | | | – | | | – | | | – | | | | |
| Self-declaration | | Self-declaration | | | Self-declaration | | | Self-declaration | | | Self-declaration | | | Self-declaration | | | Self-declaration | | | Self-declaration | | | | |
| Recognition in process | | Recognition in process | | | Recognition in process | | | Recognition in process | | | Recognition in process | | | Recognition in process | | | Recognition in process | | | Recognition in process | | | | |
| ☆ (LR, ABS, GL) | – | ☆ (LR, ABS, GL) | | | ☆ (LR, ABS, GL) | | | ☆ | | – | ☆ | | – | ☆ (LR, ABS, GL) | | | ☆ (LR, ABS, GL) | | | ☆ (LR, ABS, GL) | | | | |
| Electronic (effective value detection) | | Thermal-magnetic | | | Thermal-magnetic | | | Thermal-magnetic | | | Thermal-magnetic | | | Thermal-magnetic | | | Thermal-magnetic | | | Thermal-magnetic | | | | |
| Equipped | | Equipped | | | Equipped | | | Equipped | | | Equipped | | | Equipped | | | Equipped | | | Equipped | | | | |
| 156 | | 154 | | | 154 | | | 150 | | | | | | 154 | | | 154 | | | 154 | | | | |

Remarks: 1. Products with rated current parenthesized are produced when an order is placed.
2. Specify "P-LT" when using a plug-in product with a lead-wire terminal block.
3. The circuit breaker has the rated short-circuit breaking capacity specified in the shaded cells.

## NF-H / NF-R (High-performance class)

| Frame (A) | | | 250 | | 400 | | 400 | 630 | | 630 | 800 | | 800 |
|---|---|---|---|---|---|---|---|---|---|---|---|---|---|
| Model | | | NF250-HEV | | NF400-HEW | | NF400-REW | NF630-HEW | | NF630-REW | NF800-HEW | | NF800-REW |
| Image | | | | | | | | | | | | | |
| Rated current In (A) Rated ambient temperture 40°C (45°C for marine use) | | | 80-160 125-250 | | Adjustable 200 225 250 300 350 400 | | Adjustable 200 225 250 300 350 400 | Adjustable 300 350 400 500 600 630 | | Adjustable 300 350 400 500 600 630 | Adjustable 400 450 500 600 700 800 | | Adjustable 400 450 500 600 700 800 |
| Number of poles | | | 3 | 4 | 3 | 4 | 3 | 3 | 4 | 3 | 3 | 4 | 3 |
| Rated insulation voltage Ui (V) | | | 690 | | 690 | | 690 | 690 | | 690 | 690 | | 690 |
| Rated short-circuit breaking capacities (kA) IEC 60947-2 EN 60947-2 (Icu/Ics) | AC | 690V | 10/8 | | 35/18 | | – | 35/18 | | – | 15/15 | | – |
| | | 500V | 50/38 | | 50/50 | | 70/35 | 50/50 | | 70/35 | 50/50 | | 70/35 |
| | | 440V | 65/65 | | 65/65 | | 125/63 | 65/65 | | 125/63 | 65/65 | | 125/63 |
| | | 415V | 70/70 | | 70/70 | | 125/63 | 70/70 | | 125/63 | 70/70 | | 125/63 |
| | | 400V | 75/75 | | 70/70 | | 125/63 | 70/70 | | 125/63 | 70/70 | | 125/63 |
| | | 380V | 75/75 | | 70/70 | | 125/63 | 70/70 | | 125/63 | 70/70 | | 125/63 |
| | | 230V | 100/100 | | 100/100 | | 150/75 | 100/100 | | 150/75 | 100/100 | | 150/75 |
| | | 200V | 100/100 | | 100/100 | | 150/75 | 100/100 | | 150/75 | 100/100 | | 150/75 |
| | DC | 250V | – | | – | | – | – | | – | – | | – |
| Rated impulse withstand voltage Uimp (kV) | | | 8 | | 8 | | 8 | 8 | | 8 | 8 | | 8 |
| Current | | | AC | | AC | | AC | AC | | AC | AC | | AC |
| Suitability for isolation | | | Compatible | | Compatible | | Compatible | Compatible | | Compatible | Compatible | | Compatible |
| Reverse connection | | | Possible | | Possible | | Possible | Possible | | Possible | Possible | | Possible |
| Number of operating cycles | Without current | | 25,000 | | 6,000 | | 6,000 | 6,000 | | 6,000 | 4,000 | | 4,000 |
| | With current (440VAC) | | 10,000 | | 1,000 | | 1,000 | 1,000 | | 1,000 | 500 | | 500 |
| Utilization category | | | A | | B | | B | B | | B | B | | B |
| Rated short time with stand current Icu (kA) at 0.25s | | | – | | 5 | | 5 | 7.6 | | 7.6 | 9.6 | | 9.6 |
| Pollution degree | | | 3 | | 3 | | 3 | 3 | | 3 | 3 | | 3 |
| EMC environment condition (environment A or B) | | | A | | A | | A | A | | A | A | | A |
| Overall dimensions (mm) | | a | 105 | 140 | 140 | 185 | 140 | 140 | 185 | 140 | 210 | 280 | 210 |
| | | b | 165 | | 257 | | 257 | 257 | | 257 | 275 | | 275 |
| | | c | 68 | | 103 | | 103 | 103 | | 103 | 103 | | 103 |
| | | ca | 92 | | 155 | | 155 | 155 | | 155 | 155 | | 155 |
| Mass of front-face type (kg) | | | 1.7 | 2.2 | 6.0 | 7.6 | 6.0 | 6.5 | 8.3 | 6.0 | 10.9 | 14.2 | 10.9 |
| Installation and connections | Front connection (F) | Page | ●Screw terminal | | ●Busbar terminal | | ●Busbar terminal | ●Busbar terminal | ●Busbar terminal | ●Busbar terminal | ●Busbar terminal | ●Busbar terminal | ●Busbar terminal |
| | Solderless (BOX) terminal (SL) | 94 | ● | ● | ● | ● | ● | ● | ● | ● | ● | ● | ● |
| | Rear (B) | | ●Bar stud | ●Bar stud | ●Bar stud | | ●Bar stud | ●Bar stud | ●Bar stud | ●Bar stud | ●Bar stud | ●Bar stud | ●Bar stud |
| | Plug-in (PM) | | ● | ● | ● | ● | ● | ● | ● | ● | ● | ● | ● |
| Cassette-type accessories | Alarm switch (AL) | 104 | ● (*1) | ● | ● (*1) | ● | ● (*1) | ● (*1) | ● | ● (*1) | ● (*1) | ● | ● (*1) |
| | Auxiliary switch (AX) | | ● (*1) | ● | ● (*1) | ● | ● (*1) | ● (*1) | ● | ● (*1) | ● (*1) | ● | ● (*1) |
| | Shunt trip (SHT) | | ● (*1) | ● | ● (*1) | ● | ● (*1) | ● (*1) | ● | ● (*1) | ● (*1) | ● | ● (*1) |
| | Undervoltage trip (UVT) | | ● (*1) | ● | ● | ● | ● | ● | ● | ● | ● | ● | ● |
| | With lead-wire terminal block (SLT) | 116 | ● | ● | ● | ● | ● | ● | ● | ● | ● | ● | ● |
| | Pre-alarm (PAL) | 118 | ● | | ● (*2) | | ● (*2) | ● (*2) | | ● (*2) | ● (*2) | | ● (*2) |
| External accessories | Enclosure Closed (S) | 132 | – | | – | | – | – | | – | – | | – |
| | Enclosure Dustproof (I) | | ● | – | – | | – | – | | – | – | | – |
| | Enclosure Waterproof (W) | | ● | – | – | | – | – | | – | – | | – |
| | Electrical operation device (NFM) | 135 | ● | | ● (*3) | | ● (*3) | ● (*3) | | ● (*3) | ● (*3) | | ● (*3) |
| | Mechanical interlock (MI) (*4) Panel mounting | 131 | ● | ● | ● | ● | ● | ● | ● | ● | ● | ● | ● |
| | Mechanical interlock (MI) (*4) Breaker mounting | | ● | – | ● | – | ● | ● | – | ● | ● | – | ● |
| | Handle lock device LC | 129 | ● | | – | | – | – | | – | – | | – |
| | Handle lock device HL | | ● | | ● | | ● | ● | | ● | ● | | ● |
| | Handle lock device HL-S | | ● | | ● | | ● | ● | | ● | ● | | ● |
| | External operating handle (F) | 119 | ● | | ● | | ● | ● | | ● | ● | | ● |
| | External operating handle (V) | | ● | | ● | | ● | ● | | ● | ● | | ● |
| | Terminal cover (TC-L, TC-S, TTC, BTC, PTC) | 123 | ● | ● | ● | ● | ● | ● | ● | ● | ● | | ● |
| | Rear stud (B-ST) | 96 | ● | ● | ● | | ● | ● | ● | ● | ● | ● | ● |
| | Plug-in (PM) | | ● | ● | ● | | ● | ● | ● | ● | ● | | ● |
| | IEC 35mm rail mounting adapters | 139 | – | | – | | – | – | | – | – | | – |
| CE marking | | | Self-declaration | | Self-declaration | | Self-declaration | Self-declaration | | Self-declaration | Self-declaration | | Self-declaration |
| CCC recognition | | | Recognition in process | | Recognition in process | | Recognition in process | Recognition in process | | Recognition in process | Recognition in process | | Recognition in process |
| Marine use approval (NK, LR, ABS, GL) | | | ☆ (LR, ABS, GL) | – | ☆ | – | ☆ | ☆ | – | ☆ | ☆ | – | ☆ |
| Automatic tripping device | | | Electronic (effective value detection) | | Electronic (effective value detection) | | Electronic (effective value detection) | Electronic (effective value detection) | | Electronic (effective value detection) | Electronic (effective value detection) | | Electronic (effective value detection) |
| Trip button | | | Equipped | | Equipped | | Equipped | Equipped | | Equipped | Equipped | | Equipped |
| Page of Characteristics and dimensions | | | 156 | | 160 | | 160 | 166 | | 166 | 168 | | 168 |

Notes: *1 The cassette type design makes it easy for customer to install. Available for installation on side below 250A frame (excluding UVT).
*2 Solid state relay output is option. Please specify if other output is necessary. (Standard type is thus SLT equipped).
*3 Place an order of other models in conjunction with the circuit breaker.
*4 Not isolation compatible, excluding 400 to 800A frame.

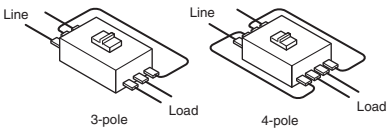

## NF-U (Ultra current-limiting class)

| | | | | | | | | | | | | |
|---|---|---|---|---|---|---|---|---|---|---|---|---|
| | 125 | | | 250 | | | 400 | | | 800 | | |
| | NF125-UV | | | NF250-UV | | | NF400-UEW | | | NF800-UEW | | |
| | | | | | | | | | | | | |
| | 15 20 30 40 50 60 75 100 125 | | | 125 150 175 200 225 250 | | | Adjustable 200 225 250 300 350 400 | | | Adjustable 400 450 500 600 700 800 | | |
| | 2 | 3 | 4 | 2 | 3 | 4 | 3 | 4 | | 3 | 4 | |
| | 690 | | | 690 | | | 690 | | | 690 | | |
| | 10/10 | | | 15/15 | | | – | | | 35/35 | | |
| | 200/200 | | | 200/200 | | | 170/170 | | | 170/170 | | |
| | 200/200 | | | 200/200 | | | 200/200 | | | 200/200 | | |
| | 200/200 | | | 200/200 | | | 200/200 | | | 200/200 | | |
| | 200/200 | | | 200/200 | | | 200/200 | | | 200/200 | | |
| | 200/200 | | | 200/200 | | | 200/200 | | | 200/200 | | |
| | 200/200 | | | 200/200 | | | 200/200 | | | 200/200 | | |
| | 200/200 | | | 200/200 | | | 200/200 | | | 200/200 | | |
| | – | | | – | | | – | | | – | | |
| | 8 | | | 8 | | | 8 | | | 8 | | |
| | AC | | | AC | | | AC | | | AC | | |
| | Compatible | | | Compatible | | | Compatible | | | Compatible | | |
| | Possible | | | Possible | | | Possible | | | Possible | | |
| | 25,000 | | | 25,000 | | | 6,000 | | | 4,000 | | |
| | 10,000 | | | 10,000 | | | 1,000 | | | 500 | | |
| | A | | | A | | | B | | | B | | |
| | – | | | – | | | 5 | | | 9.6 | | |
| | 3 | | | 3 | | | 3 | | | 3 | | |
| | N/A | | | N/A | | | A | | | A | | |
| | 90 | | 120 | 105 | | 140 | 140 | | 280 | 210 | | 280 |
| | 191 | | | 240 | | | 297 | | 322 | 322 | | |
| | 68 | | | 68 | | | 200 | | | 200 | | |
| | 90 | | | 92 | | | 252 | | | 252 | | |
| | 1.35 | 1.5 | 1.9 | 2.5 | 2.7 | 3.7 | 16.2 | | 25.4 | 27.6 | | 33.7 |
| | ●Screw terminal | | | ●Screw terminal | | | ●Busbar terminal | | | ●Busbar terminal | | |
| | ●Bar stud | | | ●Bar stud | | | ● | | | ● | | |
| | ●Bar stud | | | ●Bar stud | | | ●Bar stud | | | ●Bar stud | | |
| | ● | | – | ● | | – | ● | | – | – | | |
| | ● (*1) | | ● | ● (*1) | | ● | ● (*1) | | | ● (*1) | | |
| | ● (*1) | | ● | ● (*1) | | ● | ● (*1) | | | ● (*1) | | |
| | ● (*1) | | ● | ● (*1) | | ● | ● (*1) | | | ● (*1) | | |
| | ● (*1) | | ● | ● (*1) | | ● | ● | | | ● | | |
| | ● | | | ● | | | ● | | | ● | | |
| | – | | | – | | | ● (*2) | | | ● (*2) | | |
| | – | | | – | | | – | | | – | | |
| | – | | | – | | | – | | | – | | |
| | – | | | – | | | – | | | – | | |
| | ● | | | ● | | | ● (*3) | | | ● (*3) | | |
| | ● | | | ● | | | ● | | | ● | | |
| | – | | | – | | | – | | | – | | |
| | ● | | | ● | | | – | | | – | | |
| | ● | | | ● | | | ● | | | ● | | |
| | ● | | | ● | | | ● | | | ● | | |
| | ● | | | ● | | | ● | | | ● | | |
| | ● | | | ● | | | ● | | – | – | | |
| | ● | | | ● | | | ● | | | ● | | |
| | – | | | – | | | – | | | – | | |
| | ● | | – | ● | | – | – | | | – | | |
| | – | | | – | | | – | | | – | | |
| | Self-declaration | | | Self-declaration | | | Self-declaration | | | Self-declaration | | |
| | – | | | – | | | – | | | – | | |
| | ☆ | | – | ☆ | | – | ☆ | | – | – | | |
| | Thermal-magnetic | | | Thermal-magnetic | | | Electronic (effective value detection) | | | Electronic (effective value detection) | | |
| | Equipped | | | Equipped | | | Equipped | | | Equipped | | |
| | 148 | | | 152 | | | 162 | | | 172 | | |

Remarks: 1. Products with rated current parenthesized are produced when an order is placed.
2. Specify "P-LT" when using a plug-in product with a lead-wire terminal block.
3. The circuit breaker has the rated short-circuit breaking capacity specified in the shaded cells.

## NV-C (Economy class) Harmonic Surge Ready

| Frame (A) | 50 | | 60 | | 63 | | 100 | 125 |
|---|---|---|---|---|---|---|---|---|
| Model | NV63-CV | | | | | | NV125-CV | |
| Image | | | | | | | | |
| Rated current In (A) Rated ambient temperture 40°C | (5) (10) (15) 16 20 25 (30) 32 40 50 | | (60) | | 63 | | (60) 63 (75) 80 100 | 125 |
| Number of poles | 2 | 3 | 2 | 3 | 2 | 3 | 3 | 3 |
| Phase line (*1) | 1$\phi$2W | 3$\phi$3W, 1$\phi$3W, 1$\phi$2W | 1$\phi$2W | 3$\phi$3W, 1$\phi$3W, 1$\phi$2W | 1$\phi$2W | 3$\phi$3W, 1$\phi$3W, 1$\phi$2W | 3$\phi$3W, 1$\phi$3W, 1$\phi$2W | 3$\phi$3W, 1$\phi$3W, 1$\phi$2W |
| Rated operational voltage Ue (V) (*2) AC | 100-240 | 100-440 | 100-240 | 100-440 | 100-240 | 100-440 | 100-440 | 100-440 |
| High-speed type: Rated current sensitivity (mA) | 30 | 30,100/200/500 selectable | 30 | 30,100/200/500 selectable | 30 | 30,100/200/500 selectable | 30,100/200/500 selectable | 30,100/200/500 selectable |
| High-speed type: Max. operating time (s) at I$\Delta$n | 0.1 | | 0.1 | | 0.1 | | 0.1 | 0.1 |
| High-speed type: Max. operating time (s) at 5I$\Delta$n | 0.04 | | 0.04 | | 0.04 | | 0.04 | 0.04 |
| Time-delay type: Rated current sensitivity (mA) | – | | – | | – | | (100/200/500 selectable) | (100/200/500 selectable) |
| Time-delay type: Max. operating time (s) (*3) | – | | – | | – | | (0.45/1.0/2.0 selectable) | (0.45/1.0/2.0 selectable) |
| Time-delay type: Internal non-operating (s) (or more) | – | | – | | – | | (0.1/0.5/1.0) | (0.1/0.5/1.0) |
| Earth leakage indication system | Mechanical type (button) | | Mechanical type (button) | | Mechanical type (button) | | Mechanical type (button) | Mechanical type (button) |
| Rated short-circuit breaking capacities (kA) IEC 60947-2 EN 60947-2 (Icu/Ics) AC 440V | – | 2.5/2.5 | – | 2.5/2.5 | – | 2.5/2.5 | 10/5 | 10/5 |
| 415V | – | 2.5/2.5 | – | 2.5/2.5 | – | 2.5/2.5 | 10/5 | 10/5 |
| 400V | – | 5/5 | – | 5/5 | – | 5/5 | 10/5 | 10/5 |
| 230V | 7.5/7.5 | | 7.5/7.5 | | 7.5/7.5 | | 30/15 | 30/15 |
| 200V | 7.5/7.5 | | 7.5/7.5 | | 7.5/7.5 | | 30/15 | 30/15 |
| 100V | 7.5/7.5 | | 7.5/7.5 | | 7.5/7.5 | | 30/15 | 30/15 |
| Rated impulse withstand voltage Uimp (kV) | 6 | | 6 | | 6 | | 6 | 6 |
| Current | AC | | AC | | AC | | AC | AC |
| Suitability for isolation | Compatible | | Compatible | | Compatible | | Compatible | Compatible |
| Reverse connection (below 230VAC) | Possible | | Possible | | Possible | | Possible | Possible |
| Number of operating cycles: Without current | 10,000 | | 10,000 | | 10,000 | | 10,000 | 10,000 |
| Number of operating cycles: With current | 6,000 | | 6,000 | | 6,000 | | 6,000 | 6,000 |
| Utilization category | A | | A | | A | | A | A |
| Pollution degree | 2 | | 2 | | 2 | | 2 | 2 |
| EMC environment condition (environment A or B) | A | | A | | A | | A | A |
| Overall dimensions (mm) a | 75 | | 75 | | 75 | | 90 | 90 |
| b | 130 | | 130 | | 130 | | 130 | 130 |
| c | 68 | | 68 | | 68 | | 68 | 68 |
| ca | 90 | | 90 | | 90 | | 90 | 90 |
| Mass of front-face type (kg) | 0.7 | 0.75 | 0.7 | 0.75 | 0.7 | 0.75 | 1.0 | 1.0 |
| Installation and connections: Front connection (F) | Page | ●Screw terminal | | ●Screw terminal | | ●Screw terminal | ●Screw terminal | ●Screw terminal |
| Solderless (BOX) terminal (SL) | 94 | – | | – | | – | – | – |
| Rear (B) | | ●Round stud | | ●Round stud | | ●Round stud | ●Bar stud | ●Bar stud |
| Plug-in (PM) | | – | | – | | – | – | – |
| Cassette-type accessories: Alarm switch (AL) | 104 | ● (*4) | | ● (*4) | | ● (*4) | ● (*4) | ● (*4) |
| Auxiliary switch (AX) | | ● (*4) | | ● (*4) | | ● (*4) | ● (*4) | ● (*4) |
| Shunt trip (SHT) | | ● (*4) | | ● (*4) | | ● (*4) | ● (*4) | ● (*4) |
| Undervoltage trip (UVT) | | ● (*4) | | ● (*4) | | ● (*4) | ● (*4) | ● (*4) |
| Earth leakage alarm switch (EAL) | | – | | – | | – | – | – |
| With lead-wire terminal block (SLT) | 116 | ● | | ● | | ● | ● | ● |
| Test button module (TBM) | 117 | ● (*5) | | ● (*5) | | ● (*5) | ● (*5) | ● (*5) |
| External accessories: Enclosure Closed (S) | 132 | – | | – | | – | – | – |
| Dustproof (I) | | – | | – | | – | – | – |
| Waterproof (W) | | – | | – | | – | – | – |
| Electrical operation device (NFM) | 135 | – | | – | | – | ● | ● |
| Mechanical interlock (MI) (*7) Panel mounting | 131 | ● | | ● | | ● | ● | ● |
| Mechanical interlock (MI) (*7) Breaker mounting | | ● | | ● | | ● | ● | ● |
| Handle lock device LC | 129 | ● | | ● | | ● | ● | ● |
| Handle lock device HL | | ● | | ● | | ● | ● | ● |
| Handle lock device HL-S | | ● | | ● | | ● | ● | ● |
| External operating handle (F) | 119 | ● | | ● | | ● | ● | ● |
| External operating handle (V) | | ● | | ● | | ● | ● | ● |
| Terminal cover (TC-L, TC-S, TTC, BTC, PTC) | 123 | ● | | ● | | ● | ● | ● |
| Rear stud (B-ST) | 96 | ● | | ● | | ● | ● | ● |
| Plug-in (PM) | | – | | – | | – | – | – |
| IEC 35mm rail mounting adapters | 139 | ● | | ● | | ● | – | – |
| CE marking | Self-declaration | | Self-declaration | | Self-declaration | | Self-declaration | Self-declaration |
| CCC recognition | – | Recognition in process | – | Recognition in process | – | Recognition in process | Recognition in process | Recognition in process |
| Marine use approval (NK, LR, ABS, GL) | – | | – | | – | | – | – |
| Automatic tripping device | Thermal-magnetic | | Thermal-magnetic | | Thermal-magnetic | | Thermal-magnetic | Thermal-magnetic |
| Trip button | Equipped | | Equipped | | Equipped | | Equipped | Equipped |
| Page of Characteristics and dimensions | 182 | | | | | | 184 | |

Notes:
*1 If using a 3-pole earth leakage circuit breaker as a 1-pole 2-phase device, connect the left and right poles and not the central pole. When wiring to single-phase 3-wire, connect the neutral line to the central pole.
*2 In case of time delay type, rated voltage is 200-440VAC.
*3 When the operating time are 0.45, 1.0 and 2.0 seconds, the Earth Leakage circuit breaker operates between 0.15 and 0.45 seconds, between 0.6 and 1.0 seconds and between 1.2 and 2.0 seconds respectively.
*4 The cassette type design makes it easy for customer to install. Available for installation on side below 250A frame (excluding UVT).
*5 Standard type is SLT equipped.
*6 Place an order of other models in conjunction with the circuit breaker.
*7 Not isolation compatible, excluding 400 to 630A frame.
*8 AC100V does not acquire the CCC certification.

## NV-C (Economy class) Harmonic Surge Ready

| | 225 | 250 | 400 | 600 | 630 |
|---|---|---|---|---|---|
| | NV250-CV | | NV400-CW | NV630-CW | |
| | | | | | |
| | 125 150 175 200 225 | 250 | 250 300 350 400 | 500 600 | (630) |
| | 3 | 3 | 3 | 3 | 3 |
| | 3$\phi$3W, 1$\phi$3W, 1$\phi$2W | 3$\phi$3W, 1$\phi$3W, 1$\phi$2W | 3$\phi$3W, 1$\phi$3W, 1$\phi$2W | 3$\phi$3W, 1$\phi$3W, 1$\phi$2W | 3$\phi$3W, 1$\phi$3W, 1$\phi$2W |
| | 100-440 | 100-440 | 100-440 | 200-440 | 200-440 |
| | 30,100/200/500 selectable | 30,100/200/500 selectable | (30),100/200/500 selectable | – | – |
| | 0.1 | 0.1 | 0.1 | – | – |
| | 0.04 | 0.04 | 0.04 | – | – |
| | (100/200/500 selectable) | (100/200/500 selectable) | (100/200/500 selectable) | (100/200/500 selectable) | (100/200/500 selectable) |
| | (0.45/1.0/2.0 selectable) | (0.45/1.0/2.0 selectable) | (0.45/1.0/2.0 selectable) | (0.45/1.0/2.0 selectable) | (0.45/1.0/2.0 selectable) |
| | (0.1/0.5/1.0) | (0.1/0.5/1.0) | (0.1/0.5/1.0) | (0.1/0.5/1.0) | (0.1/0.5/1.0) |
| | Mechanical type (button) | Mechanical type (button) | Mechanical type (button) | Mechanical type (button) | Mechanical type (button) |
| | 15/12 | 15/12 | 25/13 | 36/18 | 36/18 |
| | 25/19 | 25/19 | 36/18 | 36/18 | 36/18 |
| | 25/19 | 25/19 | 36/18 | 36/18 | 36/18 |
| | 36/27 | 36/27 | 50/25 | 50/25 | 50/25 |
| | 36/27 | 36/27 | 50/25 | 50/25 | 50/25 |
| | 36/27 | 36/27 | 50/25 | – | – |
| | 6 | 6 | 8 | 8 | 8 |
| | AC | AC | AC | AC | AC |
| | Compatible | Compatible | Compatible | Compatible | Compatible |
| | Possible | Possible | Possible | Possible | Possible |
| | 8,000 | 8,000 | 6,000 | 6,000 | 6,000 |
| | 4,000 | 4,000 | 1,000 | 1,000 | 1,000 |
| | A | A | A | A | A |
| | 2 | 2 | 3 | 3 | 3 |
| | A | A | A | A | A |
| | 105 | 105 | 140 | 140 | 140 |
| | 165 | 165 | 257 | 257 | 257 |
| | 68 | 68 | 103 | 103 | 103 |
| | 92 | 92 | 134 | 155 | 155 |
| | 1.7 | 1.7 | 6.1 | 6.9 | 6.9 |
| | ●Screw terminal | ●Screw terminal | ●Busbar terminal | ●Busbar terminal | ●Busbar terminal |
| | – | – | – | – | – |
| | ●Bar stud | ●Bar stud | ●Bar stud | ●Bar stud | ●Bar stud |
| | – | – | – | – | – |
| | ● (*4) | ● (*4) | ● (*4) | ● (*4) | ● (*4) |
| | ● (*4) | ● (*4) | ● (*4) | ● (*4) | ● (*4) |
| | ● (*4) | ● (*4) | ● (*4) | ● (*4) | ● (*4) |
| | ● (*4) | ● (*4) | ● | ● | ● |
| | – | – | – | – | – |
| | ● | ● | ● | ● | ● |
| | ● (*5) | ● (*5) | ● (*5) | ● (*5) | ● (*5) |
| | – | – | – | – | – |
| | – | – | – | – | – |
| | – | – | – | – | – |
| | ● | ● | ● (*6) | ● (*6) | ● (*6) |
| | ● | ● | ● | ● | ● |
| | ● | ● | ● | ● | ● |
| | ● | ● | – | – | ● |
| | ● | ● | ● | ● | ● |
| | ● | ● | ● | ● | ● |
| | ● | ● | ● | ● | ● |
| | ● | ● | ● | ● | ● |
| | ● | ● | ● | ● | ● |
| | ● | ● | ● | ● | ● |
| | – | – | – | – | – |
| | – | – | – | – | – |
| | TÜV approval | TÜV approval | Self-declaration | Self-declaration | Self-declaration |
| | Recognition in process | Recognition in process | Recognition in process | Recognition in process | Recognition in process |
| | – | – | – | – | – |
| | Thermal-magnetic | Thermal-magnetic | Thermal-magnetic | Thermal-magnetic | Thermal-magnetic |
| | Equipped | Equipped | Equipped | Equipped | Equipped |
| | 186 | | 190 | 194 | |

Remarks: 1. Products with rated current parenthesized are produced when an order is placed.
2. Specify "P-LT" when using a plug-in product with a lead-wire terminal block.
3. The circuit breaker has the rated short-circuit breaking capacity specified in the shaded cells.
4.

| Rated operational voltage | Applicable circuit voltage | Available voltage range |
|---|---|---|
| 100-240V | 100/110/200/220/230/240V | 85-264V |
| 100-440V | 100/110/200/220/240/254/265/380/400/415/440V | 85-484V |
| 200-440V | 200/220/240/254/265/380/400/415/440V | 160-484V |

## NV-S (Standard class) Harmonic Surge Ready

| Frame (A) | 30 | 32 | 50 | 60 | 63 | 100 | | 125 | | 125 | |
|---|---|---|---|---|---|---|---|---|---|---|---|
| Model | NV32-SV | | NV63-SV | | | NV125-SV | | | | NV125-SEV | |
| Image | | | | | | | | | | | |
| Rated current In (A) Rated ambient temperture 40°C | (5) 6 10 (15) 16 20 25 (30) | (32) | (5) (10) (15) 16 20 25 (30) 32 40 50 | (60) | 63 | (15) 16 20 (30) 32 40 50 (60) 63 (75) 80 100 (*3) | | 125 | | 63-125 | |
| Number of poles | 3 | 3 | 3 | 3 | 3 | 3 | 4 | 3 | 4 | 3 | 4 |
| Phase line (*1) | 3φ3W, 1φ3W, 1φ2W | 3φ3W, 1φ3W, 1φ2W | 3φ3W, 1φ3W, 1φ2W | 3φ3W, 1φ3W, 1φ2W | 3φ3W, 1φ3W, 1φ2W | 3φ3W, 1φ3W, 1φ2W | 3φ4W | 3φ3W, 1φ3W, 1φ2W | 3φ4W | 3φ3W, 1φ2W | 3φ4W |
| Rated operational voltage Ue (V) (*2) AC | 100-440 | 100-440 | 100-440 | 100-440 | 100-440 | 100-440 | 200-440 | 100-440 | 200-440 | 100-440 | |
| High-speed type: Rated current sensitivity (mA) | 30,100/200/500 selectable | 30,100/200/500 selectable | 30,100/200/500 selectable | 30,100/200/500 selectable | 30,100/200/500 selectable | 30,100/200/500 selectable | | 30,100/200/500 selectable | | (30),100/200/500 selectable | |
| High-speed type: Max. operating time (s) at IΔn | 0.1 | 0.1 | 0.1 | 0.1 | 0.1 | 0.1 | | 0.1 | | 0.1 | |
| High-speed type: Max. operating time (s) at 5IΔn | 0.04 | 0.04 | 0.04 | 0.04 | 0.04 | 0.04 | | 0.04 | | 0.04 | |
| Time-delay type: Rated current sensitivity (mA) | – | – | – | – | – | (100/200/500selectable) | | (100/200/500selectable) | | (100/200/500selectable) | |
| Time-delay type: Max. operating time (s) (*4) | – | – | – | – | – | (0.45/1.0/2.0selectable) | | (0.45/1.0/2.0selectable) | | (0.45/1.0/2.0selectable) | |
| Time-delay type: Internal non-operating (s) (or more) | – | – | – | – | – | (0.1/0.5/1.0) | | (0.1/0.5/1.0) | | (0.1/0.5/1.0) | |
| Earth leakage indication system | Mechanical type (button) | Mechanical type (button) | Mechanical type (button) | Mechanical type (button) | Mechanical type (button) | Mechanical type (button) | | Mechanical type (button) | | Mechanical type (button) | |
| Rated short-circuit breaking capacities (kA) IEC 60947-2 EN 60947-2 (Icu/Ics) AC 440V | 5/5 | 5/5 | 7.5/7.5 | 7.5/7.5 | 7.5/7.5 | 25/25 | | 25/25 | | 36/36 | |
| 415V | 5/5 | 5/5 | 7.5/7.5 | 7.5/7.5 | 7.5/7.5 | 30/30 | | 30/30 | | 36/36 | |
| 400V | 5/5 | 5/5 | 7.5/7.5 | 7.5/7.5 | 7.5/7.5 | 30/30 | | 30/30 | | 36/36 | |
| 230V | 10/10 | 10/10 | 15/15 | 15/15 | 15/15 | 50/50 | | 50/50 | | 85/85 | |
| 200V | 10/10 | 10/10 | 15/15 | 15/15 | 15/15 | 50/50 | | 50/50 | | 85/85 | |
| 100V | 10/10 | 10/10 | 15/15 | 15/15 | 15/15 | 50/50 | – | 50/50 | – | 85/85 | |
| Rated impulse withstand voltage Uimp (kV) | 6 | 6 | 6 | 6 | 6 | 6 | | 6 | | 6 | |
| Current | AC | AC | AC | AC | AC | AC | | AC | | AC | |
| Suitability for isolation | Compatible | Compatible | Compatible | Compatible | Compatible | Compatible | | Compatible | | Compatible | |
| Reverse connection (below 230VAC) | Possible | Possible | Possible | Possible | Possible | Possible | | Possible | | Possible | |
| Number of operating cycles: Without current | 10,000 | 10,000 | 15,000 | 15,000 | 15,000 | 25,000 | | 25,000 | | 25,000 | |
| Number of operating cycles: With current | 6,000 | 6,000 | 8,000 | 8,000 | 8,000 | 10,000 | | 10,000 | | 10,000 | |
| Utilization category | A | A | A | A | A | A | | A | | A | |
| Rated short time withstand current Icu (kA) at 0.25s | – | – | – | – | – | – | | – | | – | |
| Pollution degree | 2 | 2 | 2 | 2 | 2 | 2 | | 2 | | 2 | |
| EMC environment condition (environment A or B) | A | A | A | A | A | A | | A | | A | |
| Overall dimensions (mm) a | 75 | 75 | 75 | 75 | 75 | 90 | 120 | 90 | 120 | 105 | 140 |
| b | 130 | 130 | 130 | 130 | 130 | 130 | | 130 | | 165 | |
| c | 68 | 68 | 68 | 68 | 68 | 68 | | 68 | | 68 | |
| ca | 90 | 90 | 90 | 90 | 90 | 90 | | 90 | | 92 | |
| Mass of front-face type (kg) | 0.75 | 0.75 | 0.75 | 0.8 | 0.8 | 1.1 | 1.4 | 1.1 | 1.4 | 1.9 | 2.5 |
| Installation and connections: Front connection (F) Page | ●Screw terminal | ●Screw terminal | ●Screw terminal | ●Screw terminal | ●Screw terminal | ●Screw terminal | | ●Screw terminal | | ● | |
| Solderless (BOX) terminal (SL) 94 | – | – | – | – | – | – | | – | | – | |
| Rear (B) 94 | ●Round stud | ●Round stud | ●Round stud | ●Round stud | ●Round stud | ●Bar stud | | ●Bar stud | | ●Bar stud | |
| Plug-in (PM) 94 | – | – | – | – | – | – | | – | | – | |
| Cassette-type accessories: Alarm switch (AL) 104 | ● (*5) | ● (*5) | ● (*5) | ● (*5) | ● (*5) | ● (*5) | ● | ● (*5) | ● | ● (*5) | ● |
| Auxiliary switch (AX) 104 | ● (*5) | ● (*5) | ● (*5) | ● (*5) | ● (*5) | ● (*5) | ● | ● (*5) | ● | ● (*5) | ● |
| Shunt trip (SHT) 104 | ● (*5) | ● (*5) | ● (*5) | ● (*5) | ● (*5) | ● (*5) | ● | ● (*5) | ● | ● (*5) | ● |
| Undervoltage trip (UVT) 104 | ● (*5) | ● (*5) | ● (*5) | ● (*5) | ● (*5) | ● (*5) | ● | ● (*5) | ● | ● (*5) | ● |
| Earth leakage alarm switch (EAL) 104 | – | – | – | – | – | – | | – | | – | |
| With lead-wire terminal block (SLT) 116 | ● | ● | ● | ● | ● | ● | ● | ● | ● | ● | |
| Test button module (TBM) 117 | ● (*6) | ● (*6) | ● (*6) | ● (*6) | ● (*6) | ● (*6) | | ● (*6) | | ● (*6) | |
| External accessories: Enclosure Closed (S) 132 | – | – | – | – | – | – | | – | | ● | – |
| Enclosure Dustproof (I) 132 | – | – | – | – | – | – | | – | | ● | – |
| Enclosure Waterproof (W) 132 | – | – | – | – | – | – | | – | | ● | – |
| Electrical operation device (NFM) 135 | – | – | – | – | – | ● | | ● | | ● | |
| Mechanical interlock (MI) (*8) Panel mounting 131 | ● | ● | ● | ● | ● | ● | ● | ● | ● | ● | |
| Mechanical interlock (MI) (*8) Breaker mounting 131 | ● | ● | ● | ● | ● | ● | – | ● | – | ● | – |
| Handle lock device LC 129 | ● | ● | ● | ● | ● | ● | | ● | | ● | |
| Handle lock device HL 129 | ● | ● | ● | ● | ● | ● | | ● | | ● | |
| Handle lock device HL-S 129 | ● | ● | ● | ● | ● | ● | | ● | | ● | |
| External operating handle (F) 119 | ● | ● | ● | ● | ● | ● | | ● | | ● | |
| External operating handle (V) 119 | ● | ● | ● | ● | ● | ● | | ● | | ● | |
| Terminal cover (TC-L, TC-S, TTC, BTC, PTC) 123 | ● | ● | ● | ● | ● | ● | | ● | | ● | |
| Rear stud (B-ST) 96 | ● | ● | ● | ● | ● | ● | | ● | | ● | |
| Plug-in (PM) 96 | – | – | – | – | – | – | | – | | – | |
| IEC 35mm rail mounting adapters 139 | ● | ● | ● | ● | ● | – | | – | | – | |
| CE marking | Self-declaration | Self-declaration | Self-declaration | Self-declaration | Self-declaration | Self-declaration | | Self-declaration | | Self-declaration | |
| CCC recognition | Recognition in process | Recognition in process | Recognition in process | Recognition in process | Recognition in process | Recognition in process | | Recognition in process | | Recognized | |
| Marine use approval (NK, LR, ABS, GL) | – | – | – | – | – | – | | – | | – | |
| Automatic tripping device | Thermal-magnetic | Thermal-magnetic | Thermal-magnetic | Thermal-magnetic | Thermal-magnetic | Thermal-magnetic | | Thermal-magnetic | | Electronic (effective value detection) | |
| Trip button | Equipped | Equipped | Equipped | Equipped | Equipped | Equipped | | Equipped | | Equipped | |
| Page of Characteristics and dimensions | 182 | | 182 | | | 184 | | | | 188 | |

Notes:
- *1 If using a 3-pole earth leakage cirsuit breaker as a 1-pole 2-phase device, connect the left and right poles and not the central pole. When wiring to single-phase 3-wire, connect the neutral line to the central pole.
- *2 In case of time delay type, rated voltage is 200-440VAC.
- *3 In case of time delay type, rated current is prodused with 20 amp. or less.
- *4 When the operating time are 0.45, 1.0 and 2.0 seconds, the Earth Leakage circuit breaker operates between 0.15 and 0.45 seconds, between 0.6 and 1.0 seconds and between 1.2 and 2.0 seconds respectively.
- *5 Cassette type accessories are field mountable type. It can respend to adhesion attachment of a breaker as standard below 250A frame. (excluding UVT.)
- *6 Standard type is SLT equipped.
- *7 Place an order of other models in conjunction with the circuit breaker.
- *8 Not isolation compatible, excluding 400 to 800A frame.
- *9 AC100V does not acquire the CCC certification.

## NV-S (Standard class) Harmonic Surge Ready

| | | | | | | | | | |
|---|---|---|---|---|---|---|---|---|---|
| 225 | 250 | 250 | 400 | 400 | 600 | 630 | 630 | 800 |
| NV250-SV | | NV250-SEV | NV400-SW | NV400-SEW | NV630-SW | | NV630-SEW | NV800-SEW |
| | | | | | | | | |
| 125 150 175 200 225 | 250 | 125-125 | 250 300 350 400 | Adjustable 200 225 250 300 350 400 | 500 600 | (630) | Adjustable 300 350 400 500 600 630 | Adjustable 400 450 500 600 700 800 |
| 3 | 3 | 3 | 3 | 3 / 4 | 3 | 3 | 3 / 4 | 3 |
| 3$\phi$3W, 1$\phi$3W, 1$\phi$2W | 3$\phi$3W, 1$\phi$3W, 1$\phi$2W | 3$\phi$3W, 1$\phi$2W | 3$\phi$3W, 1$\phi$3W, 1$\phi$2W | 3$\phi$3W, 1$\phi$3W, 1$\phi$2W / 3$\phi$4W | 3$\phi$3W, 1$\phi$3W, 1$\phi$2W | 3$\phi$3W, 1$\phi$3W, 1$\phi$2W | 3$\phi$3W, 1$\phi$3W, 1$\phi$2W / 3$\phi$4W | 3$\phi$3W, 1$\phi$3W, 1$\phi$2W |
| 100-440 | 100-440 | 100-440 | 100-440 | 100-440 | 200-440 | 200-440 | 100-440 | 200-440 |
| (30),100/200/500 selectable | (30),100/200/500 selectable | (30),100/200/500 selectable | (30),100/200/500 selectable | (30),100/200/500 selectable | – | – | – | – |
| 0.1 | 0.1 | 0.1 | 0.1 | 0.1 | – | – | – | – |
| 0.04 | 0.04 | 0.04 | 0.04 | 0.04 | – | – | – | – |
| (100/200/500selectable) | (100/200/500selectable) | (100/200/500selectable) | (100/200/500selectable) | (100/200/500selectable) | 100/200/500selectable | 100/200/500selectable | (100/200/500selectable) | 100/200/500selectable |
| (0.45/1.0/2.0selectable) | (0.45/1.0/2.0selectable) | (0.45/1.0/2.0selectable) | (0.45/1.0/2.0selectable) | (0.45/1.0/2.0selectable) | 0.45/1.0/2.0selectable | 0.45/1.0/2.0selectable | (0.45/1.0/2.0selectable) | 0.45/1.0/2.0selectable |
| (0.1/0.5/1.0) | (0.1/0.5/1.0) | (0.1/0.5/1.0) | (0.1/0.5/1.0) | (0.1/0.5/1.0) | 0.1/0.5/1.0 | 0.1/0.5/1.0 | (0.1/0.5/1.0) | 0.1/0.5/1.0 |
| Mechanical type (button) | Mechanical type (button) | Mechanical type (button) | Mechanical type (button) | Mechanical type (button) | Mechanical type (button) | Mechanical type (button) | Mechanical type (button) | Mechanical type (button) |
| 36/36 | 36/36 | 36/36 | 42/42 | 42/42 | 42/42 | 42/42 | 42/42 | 42/42 |
| 36/36 | 36/36 | 36/36 | 45/45 | 50/50 | 50/50 | 50/50 | 50/50 | 50/50 |
| 36/36 | 36/36 | 36/36 | 45/45 | 50/50 | 50/50 | 50/50 | 50/50 | 50/50 |
| 85/85 | 85/85 | 85/85 | 85/85 | 85/85 | 85/85 | 85/85 | 85/85 | 85/85 |
| 85/85 | 85/85 | 85/85 | 85/85 | 85/85 | 85/85 | 85/85 | 85/85 | 85/85 |
| 85/85 | 85/85 | 85/85 | 85/85 | 85/85 | – | – | 85/85 | – |
| 6 | 6 | 6 | 8 | 8 | 8 | 8 | 8 | 8 |
| AC | AC | AC | AC | AC | AC | AC | AC | AC |
| Compatible | Compatible | Compatible | Compatible | Compatible | Compatible | Compatible | Compatible | Compatible |
| Possible | Possible | Possible | Possible | Possible | Possible | Possible | Possible | Possible |
| 25,000 | 25,000 | 25,000 | 6,000 | 6,000 | 6,000 | 6,000 | 6,000 | 4,000 |
| 10,000 | 10,000 | 10,000 | 1,000 | 1,000 | 1,000 | 1,000 | 1,000 | 500 |
| A | A | A | A | B | A | A | B | A |
| – | – | – | – | 5 | – | – | 7.6 | 9.6 |
| 2 | 2 | 2 | 3 | 3 | 3 | 3 | 3 | 3 |
| A | A | A | A | A | A | A | A | A |
| 105 | 105 | 105 | 140 | 140 / 185 | 140 | 140 | 140 / 185 | 210 |
| 165 | 165 | 165 | 257 | 257 | 257 | 257 | 257 | 275 |
| 68 | 68 | 68 | 103 | 103 | 103 | 103 | 103 | 103 |
| 92 | 92 | 92 | 155 | 155 | 155 | 155 | 155 | 155 |
| 1.9 | 1.9 | 1.9 | 6.4 | 6.2 / 8.2 | 6.9 | 6.9 | 7.1 / 8.9 | 15.3 |
| ●Screw terminal | ●Screw terminal | ● | ●Busbar terminal | ●Busbar terminal | ●Busbar terminal | ●Busbar terminal | ●Busbar terminal | ●Busbar terminal |
| – | – | – | – | – | – | – | – | – |
| ●Bar stud | ●Bar stud | ●Bar stud | ●Bar stud | ●Bar stud | ●Bar stud | ●Bar stud | ●Bar stud | ●Bar stud |
| – | – | – | – | – | – | – | – | – |
| ● (*5) | ● (*5) | ● (*5) | ● (*5) | ● (*5) | ● (*5) | ● (*5) | ● (*5) | ● (*5) |
| ● (*5) | ● (*5) | ● (*5) | ● (*5) | ● (*5) | ● (*5) | ● (*5) | ● (*5) | ● (*5) |
| ● (*5) | ● (*5) | ● (*5) | ● (*5) | ● (*5) | ● (*5) | ● (*5) | ● (*5) | ● (*5) |
| ● (*5) | ● (*5) | ● (*5) | ● | ● | ● | ● | ● | ● |
| – | – | – | – | – | – | – | – | – |
| ● | ● | ● | ● | ● | ● | ● | ● | ● |
| ● (*6) | ● (*6) | ● (*6) | ● (*6) | ● (*6) | ● (*6) | ● (*6) | ● (*6) | ● (*6) |
| – | – | ● | – | – | – | – | – | – |
| – | – | ● | – | ● / – | – | – | ● / – | – |
| – | – | ● | – | ● / – | – | – | ● / – | – |
| ● | ● | ● | ● (*7) | ● (*7) | ● (*7) | ● (*7) | ● (*7) | ● (*7) |
| ● | ● | ● | ● | ● | ● | ● | ● | ● |
| ● | ● | ● | ● | ● | ● | ● | ● | ● |
| ● | ● | ● | – | – | – | – | – | – |
| ● | ● | ● | ● | ● | ● | ● | ● | ● |
| ● | ● | ● | ● | ● | ● | ● | ● | ● |
| ● | ● | ● | ● | ● | ● | ● | ● | ● |
| ● | ● | ● | ● | ● | ● | ● | ● | ● |
| ● | ● | ● | ● | ● | ● | ● | ● | ● |
| ● | ● | ● | ● | ● | ● | ● | ● | ● |
| – | – | – | – | ● | – | – | ● | – |
| – | – | – | – | – | – | – | – | – |
| TÜV approval | TÜV approval | Self-declaration | Self-declaration | Self-declaration | Self-declaration | Self-declaration | Self-declaration | Self-declaration |
| Recognition in process | Recognition in process | Recognized | Recognition in process | Recognition in process | Recognition in process | Recognition in process | Recognition in process | Recognition in process |
| – | – | – | – | – | – | – | – | – |
| Thermal-magnetic | Thermal-magnetic | Electronic (effective value detection) | Thermal-magnetic | Electronic (effective value detection) | Thermal-magnetic | Thermal-magnetic | Electronic (effective value detection) | Electronic (effective value detection) |
| Equipped | Equipped | Equipped | Equipped | Equipped | Equipped | Equipped | Equipped | Equipped |
| 186 | | 188 | 190 | 192 | 194 | | 196 | 198 |

Remarks: 1. Products with rated current parenthesized are produced when an order is placed.
2. Specify "P-LT" when using a plug-in product with a lead-wire terminal block.
3. The circuit breaker has the rated short-circuit breaking capacity specified in the shaded cells.
4.

| Rated operational voltage | Applicable circuit voltage | Available voltage range |
|---|---|---|
| 100-440V | 100/110/200/220/240/254/265/380/400/415/440V | 85-484V |
| 200-440V | 200/220/240/254/265/380/400/415/440V | 160-484V |

## NV-H / NV-R (High-performance class) Harmonic Surge Ready

| Frame (A) | 50 | 60 | 63 | 100 | | 125 | | 125 | | 225 | 250 | 250 |
|---|---|---|---|---|---|---|---|---|---|---|---|---|
| Model | NV63-HV | | | NV125-HV | | | | NV125-HEV | | NV250-HV | | NV250-HEV |
| Image | | | | | | | | | | | | |
| Rated current In (A) Rated ambient temperture 40°C | (15) 16 20 (30) 32 40 50 | (60) | 63 | (15) 16 20 (30) 32 40 50 (60) 63 (75) 80 100 (*3) | | 125 | | 63-125 | | 125 150 175 200 225 | 250 | 125-250 |
| Number of poles | 3 | 3 | 3 | 3 | 4 | 3 | 4 | 3 | 4 | 3 | 3 | 3 |
| Phase line (*1) | 3$\phi$3W, 1$\phi$3W, 1$\phi$2W | 3$\phi$3W, 1$\phi$3W, 1$\phi$2W | 3$\phi$3W, 1$\phi$3W, 1$\phi$2W | 3$\phi$3W, 1$\phi$3W, 1$\phi$2W | 3$\phi$4W | 3$\phi$3W, 1$\phi$3W, 1$\phi$2W | 3$\phi$4W | 3$\phi$3W, 1$\phi$2W | 3$\phi$4W | 3$\phi$3W, 1$\phi$3W, 1$\phi$2W | 3$\phi$3W, 1$\phi$3W, 1$\phi$2W | 3$\phi$3W, 1$\phi$2W |
| Rated operational voltage Ue (V) (*2) AC | 100-440 | 100-440 | 100-440 | 100-440 | 200-440 | 100-440 | 200-440 | 100-440 | | 100-440 | 100-440 | 100-440 |
| High-speed type: Rated current sensitivity (mA) | 30,100/200/500 selectable | 30,100/200/500 selectable | 30,100/200/500 selectable | 30,100/200/500 selectable | | 30,100/200/500 selectable | | (30),100/200/500 selectable | | 30,100/200/500 selectable | 30,100/200/500 selectable | (30),100/200/500 selectable |
| High-speed type: Max. operating time (s) at I$\Delta$n | 0.1 | 0.1 | 0.1 | 0.1 | | 0.1 | | 0.1 | | 0.1 | 0.1 | 0.1 |
| High-speed type: Max. operating time (s) at 5I$\Delta$n | 0.04 | 0.04 | 0.04 | 0.04 | | 0.04 | | 0.04 | | 0.04 | 0.04 | 0.04 |
| Time-delay type: Rated current sensitivity (mA) | – | – | – | (100/200/500selectable) | | (100/200/500selectable) | | (100/200/500selectable) | | (100/200/500selectable) | (100/200/500selectable) | (100/200/500selectable) |
| Time-delay type: Max. operating time (s) (*4) | – | – | – | (0.45/1.0/2.0selectable) | | (0.45/1.0/2.0selectable) | | (0.45/1.0/2.0selectable) | | (0.45/1.0/2.0selectable) | (0.45/1.0/2.0selectable) | (0.45/1.0/2.0selectable) |
| Time-delay type: Internal non-operating (s) (or more) | – | – | – | (0.1/0.5/1.0) | | (0.1/0.5/1.0) | | (0.1/0.5/1.0) | | (0.1/0.5/1.0) | (0.1/0.5/1.0) | (0.1/0.5/1.0) |
| Earth leakage indication system | Mechanical type (button) | | | Mechanical type (button) | | Mechanical type (button) | | Mechanical type (button) | | Mechanical type (button) | Mechanical type (button) | Mechanical type (button) |
| Rated short-circuit breaking capacities (kA) IEC 60947-2 EN 60947-2 (Icu/Ics) AC 440V | 10/8 | 10/8 | 10/8 | 50/38 | | 50/38 | | 65/65 | | 65/65 | 65/65 | 65/65 |
| 415V | 10/8 | 10/8 | 10/8 | 50/38 | | 50/38 | | 70/70 | | 70/70 | 70/70 | 70/70 |
| 400V | 10/8 | 10/8 | 10/8 | 50/38 | | 50/38 | | 75/75 | | 75/75 | 75/75 | 75/75 |
| 230V | 25/19 | 25/19 | 25/19 | 100/75 | | 100/75 | | 100/100 | | 100/100 | 100/100 | 100/100 |
| 200V | 25/19 | 25/19 | 25/19 | 100/75 | | 100/75 | | 100/100 | | 100/100 | 100/100 | 100/100 |
| 100V | 25/19 | 25/19 | 25/19 | 100/75 | – | 100/75 | – | 100/100 | | 100/100 | 100/100 | 100/100 |
| Rated impulse withstand voltage Uimp (kV) | 6 | 6 | 6 | 6 | | 6 | | 6 | | 6 | 6 | 6 |
| Current | AC | AC | AC | AC | | AC | | AC | | AC | AC | AC |
| Suitability for isolation | Compatible | Compatible | Compatible | Compatible | | Compatible | | Compatible | | Compatible | Compatible | Compatible |
| Reverse connection (below 230VAC) | – | – | – | – | | – | | – | | – | – | – |
| Number of operating cycles: Without current | 15,000 | 15,000 | 15,000 | 25,000 | | 25,000 | | 25,000 | | 25,000 | 25,000 | 25,000 |
| Number of operating cycles: With current | 8,000 | 8,000 | 8,000 | 10,000 | | 10,000 | | 10,000 | | 10,000 | 10,000 | 10,000 |
| Utilization category | A | A | A | A | | A | | A | | A | A | A |
| Rated short time withstand current Icu (kA) at 0.25s | – | – | – | – | | – | | – | | – | – | – |
| Pollution degree | 2 | 2 | 2 | 2 | | 2 | | 2 | | 2 | 2 | 2 |
| EMC environment condition (environment A or B) | A | A | A | A | | A | | A | | A | A | A |
| Overall dimensions (mm) a | 75 | 75 | 75 | 90 | 120 | 90 | 120 | 105 | 140 | 105 | 105 | 105 |
| b | 130 | 130 | 130 | 130 | | 130 | | 165 | | 165 | 165 | 165 |
| c | 68 | 68 | 68 | 68 | | 68 | | 68 | | 68 | 68 | 68 |
| ca | 90 | 90 | 90 | 90 | | 90 | | 92 | | 92 | 92 | 92 |
| Mass of front-face type (kg) | 0.75 | 0.8 | 0.8 | 1.1 | 1.4 | 1.1 | 1.4 | 1.9 | 2.5 | 1.8 | 1.8 | 1.9 |
| Installation and connections: Front connection (F) Page | ●Screw terminal | ●Screw terminal | ●Screw terminal | ●Screw terminal | | ●Screw terminal | | ● | | ●Screw terminal | ●Screw terminal | ● |
| Installation and connections: Solderless (BOX) terminal (SL) 94 | – | – | – | – | | – | | – | | – | – | – |
| Installation and connections: Rear (B) 94 | ●Round stud | ●Round stud | ●Round stud | ●Bar stud | | ●Bar stud | | ●Bar stud | | ●Bar stud | ●Bar stud | ●Bar stud |
| Installation and connections: Plug-in (PM) 94 | – | – | – | – | | – | | – | | – | – | – |
| Cassette-type accessories: Alarm switch (AL) 104 | ● (*5) | ● (*5) | ● (*5) | ● (*5) | ● | ● (*5) | ● | ● (*5) | ● | ● (*5) | ● (*5) | ● (*5) |
| Cassette-type accessories: Auxiliary switch (AX) 104 | ● (*5) | ● (*5) | ● (*5) | ● (*5) | ● | ● (*5) | ● | ● (*5) | ● | ● (*5) | ● (*5) | ● (*5) |
| Cassette-type accessories: Shunt trip (SHT) 104 | ● (*5) | ● (*5) | ● (*5) | ● (*5) | ● | ● (*5) | ● | ● (*5) | ● | ● (*5) | ● (*5) | ● (*5) |
| Cassette-type accessories: Undervoltage trip (UVT) 104 | ● (*5) | ● (*5) | ● (*5) | ● (*5) | ● | ● (*5) | ● | ● (*5) | ● | ● (*5) | ● (*5) | ● (*5) |
| Cassette-type accessories: Earth leakage alarm switch (EAL) 104 | – | – | – | – | | – | | – | | – | – | – |
| Cassette-type accessories: With lead-wire terminal block (SLT) 116 | ● | ● | ● | ● | ● | ● | ● | ● | | ● | ● | ● |
| Cassette-type accessories: Test button module (TBM) 117 | ● (*6) | ● (*6) | ● (*6) | ● (*6) | | ● (*6) | | ● (*6) | | ● (*6) | ● (*6) | ● (*6) |
| External accessories: Enclosure Closed (S) 132 | – | – | – | – | | – | | – | | – | – | – |
| External accessories: Enclosure Dustproof (I) 132 | – | – | – | – | | – | | ● | – | – | – | ● |
| External accessories: Enclosure Waterproof (W) 132 | – | – | – | – | | – | | ● | – | – | – | ● |
| External accessories: Electrical operation device (NFM) 135 | – | – | – | ● | | ● | | ● | | ● | ● | ● |
| External accessories: Mechanical interlock (MI) (*7) Panel mounting 131 | ● | ● | ● | ● | ● | ● | ● | ● | | ● | ● | ● |
| External accessories: Mechanical interlock (MI) (*7) Breaker mounting 131 | ● | ● | ● | ● | – | ● | – | ● | – | ● | ● | ● |
| External accessories: Handle lock device LC 129 | ● | ● | ● | ● | | ● | | ● | | ● | ● | ● |
| External accessories: Handle lock device HL 129 | ● | ● | ● | ● | | ● | | ● | | ● | ● | ● |
| External accessories: Handle lock device HL-S 129 | ● | ● | ● | ● | | ● | | ● | | ● | ● | ● |
| External accessories: External operating handle (F) 119 | ● | ● | ● | ● | | ● | | ● | | ● | ● | ● |
| External accessories: External operating handle (V) 119 | ● | ● | ● | ● | | ● | | ● | | ● | ● | ● |
| External accessories: Terminal cover (TC-L, TC-S, TTC, BTC, PTC) 123 | ● | ● | ● | ● | | ● | | ● | | ● | ● | ● |
| External accessories: Rear stud (B-ST) 96 | ● | ● | ● | ● | | ● | | ● | | ● | ● | ● |
| External accessories: Plug-in (PM) 96 | – | – | – | – | | – | | – | | – | – | – |
| External accessories: IEC 35mm rail mounting adapters 139 | ● | ● | ● | – | | – | | – | | – | – | – |
| CE marking | Self-declaration | Self-declaration | Self-declaration | Self-declaration | | Self-declaration | | Self-declaration | | Self-declaration | Self-declaration | Self-declaration |
| CCC recognition | Recognition in process | Recognition in process | Recognition in process | Recognition in process | | Recognition in process | | Recognized | | Recognition in process | Recognition in process | Recognized |
| Marine use approval (NK, LR, ABS, GL) | – | – | – | – | | – | | – | | – | – | – |
| Automatic tripping device | Thermal-magnetic | Thermal-magnetic | Thermal-magnetic | Thermal-magnetic | | Thermal-magnetic | | Electronic (effective value detection) | | Thermal-magnetic | Thermal-magnetic | Electronic (effective value detection) |
| Trip button | Equipped | Equipped | Equipped | Equipped | | Equipped | | Equipped | | Equipped | Equipped | Equipped |
| Page of Characteristics and dimensions | 182 | | | 184 | | | | 188 | | 186 | | 188 |

Notes:
- *1 If using a 3-pole earth leakage cirsuit breaker as a 1-pole 2-phase device, connect the left and right poles and not the central pole. When wiring to single-phase 3-wire, connect the neutral line to the central pole.
- *2 In case of time delay type, rated voltage is 200-440VAC.
- *3 In case of time delay type, rated current is prodused with 20 amp. or less.
- *4 When the operating time are 0.45, 1.0 and 2.0 seconds, the Earth Leakage circuit breaker operates between 0.15 and 0.45 seconds, between 0.6 and 1.0 seconds and between 1.2 and 2.0 seconds respectively.
- *5 Cassette type accessories are field mountable type. It can respend to adhesion attachment of a breaker as standard. (excluding UVT.)
- *6 Standard type is SLT equipped.
- *7 Not isolation compatible.
- *8 AC100V does not acquire the CCC certification.

## NV-H / NV-R (High-performance class) Harmonic Surge Ready

| | | | | |
|---|---|---|---|---|
| | 400 | 400 | 630 | 800 |
| | NV400-HEW | NV400-REW | NV630-HEW | NV800-HEW |
| | | | | |
| | Adjustable 200 225 250 300 350 400 | Adjustable 200 225 250 300 350 400 | Adjustable 300 350 400 500 600 630 | Adjustable 400 450 500 600 700 800 |
| | 3 / 4 | 3 | 3 | 3 |
| | 3$\phi$3W, 1$\phi$3W, 1$\phi$2W / 3$\phi$4W | 3$\phi$3W, 1$\phi$3W, 1$\phi$2W | 3$\phi$3W, 1$\phi$3W, 1$\phi$2W | 3$\phi$3W, 1$\phi$3W, 1$\phi$2W |
| | 100-440 | 100-440 | 100-440 | 100-440 |
| | (30), 100/200/500 selectable | (30), 100/200/500 selectable | – | – |
| | 0.1 | 0.1 | – | – |
| | 0.04 | 0.04 | – | – |
| | (100/200/500 selectable) | (100/200/500 selectable) | (100/200/500 selectable) | (100/200/500 selectable) |
| | (0.45/1.0/2.0) | (0.45/1.0/2.0) | (0.45/1.0/2.0) | (0.45/1.0/2.0 selectable) |
| | (0.1/0.5/1.0) | (0.1/0.5/1.0) | (0.1/0.5/1.0) | (0.1/0.5/1.0) |
| | Mechanical type (button) | Mechanical type (button) | Mechanical type (button) | Mechanical type (button) |
| | 65/65 | 125/63 | 65/65 | 65/65 |
| | 70/70 | 125/63 | 70/70 | 70/70 |
| | 70/70 | 125/63 | 70/70 | 70/70 |
| | 100/100 | 150/75 | 100/100 | 100/100 |
| | 100/100 | 150/75 | 100/100 | 100/100 |
| | 100/100 | 150/75 | 100/100 | 100/100 |
| | 8 | 8 | 8 | 8 |
| | AC | AC | AC | AC |
| | Compatible | Compatible | Compatible | Compatible |
| | – | – | – | – |
| | 6,000 | 6,000 | 6,000 | 4,000 |
| | 1,000 | 1,000 | 1,000 | 500 |
| | B | B | B | B |
| | 5 | 5 | 7.6 | 9.6 |
| | 3 | 3 | 3 | 3 |
| | A | A | A | A |
| | 140 / 185 | 140 | 140 | 210 |
| | 257 | 257 | 257 | 275 |
| | 103 | 103 | 103 | 103 |
| | 155 | 155 | 155 | 155 |
| | 6.6 / 8.2 | 6.6 | 7.1 | 15.3 |
| | ●Busbar terminal | ●Busbar terminal | ●Busbar terminal | ●Busbar terminal |
| | – | – | – | – |
| | ●Bar stud | ●Bar stud | ●Bar stud | ●Bar stud |
| | – | – | – | – |
| | ● (*5) | ● (*5) | ● (*5) | ● (*5) |
| | ● (*5) | ● (*5) | ● (*5) | ● (*5) |
| | ● (*5) | ● (*5) | ● (*5) | ● (*5) |
| | ● | ● | ● | ● |
| | – | – | – | – |
| | ● | ● | ● | ● |
| | ● (*6) | ● (*6) | ● (*6) | ● (*6) |
| | – | – | – | – |
| | ● / – | ● | ● | ● |
| | ● / – | ● | ● | ● |
| | ● (*7) | ● (*7) | ● (*7) | ● (*7) |
| | ● | ● | ● | ● |
| | ● | ● | ● | ● |
| | – | – | – | – |
| | ● | ● | ● | ● |
| | ● | ● | ● | ● |
| | ● | ● | ● | ● |
| | ● | ● | ● | ● |
| | ● | ● | ● | ● |
| | ● | ● | ● | ● |
| | – | – | – | – |
| | – | – | – | – |
| | Self-declaration | Self-declaration | Self-declaration | Self-declaration |
| | Recognition in process | Recognition in process | Recognition in process | Recognition in process |
| | – | – | – | – |
| | Electronic (effective value detection) | Electronic (effective value detection) | Electronic (effective value detection) | Electronic (effective value detection) |
| | Equipped | Equipped | Equipped | Equipped |
| | 192 | 192 | 196 | 198 |

Remarks:
1. Products with rated current parenthesized are produced when an order is placed.
2. The setting is set to 500mA and delivered when not specifying the rated current sensitivity and the time of time-delay type of operation to 2.0 seconds.
3. Specify "FP-LT" when using a flush plate product with a lead-wire terminal block.
4. Specify "P-LT" when using a plug-in product with a lead-wire terminal block.
5. The circuit breaker has the rated short-circuit breaking capacity specified in the shaded cells.
6.

| Rated operational voltage | Applicable circuit voltage | Available voltage range |
|---|---|---|
| 100-440V | 100/110/200/220/240/254/265/380/400/415/440V | 80-484V |
| 200-440V | 200/220/240/254/265/380/400/415/440V | 160-484V |

## NF-MB

Please specify MB

| Frame (A) | 30 | 32 | 50 | | 100 | 225 |
|---|---|---|---|---|---|---|
| Model | NF32-SV | | NF63-CV | NF63-SV | NF125-SV | NF250-SV |
| Rated current In (A) / Rated motor capacity (kW) (Rated ambient temperture 40°C (45°C for marine use)) | A / 200/220V kW / 400/440V kW | A / 200/220V kW / 400/440V kW | A / 200/220V kW / 400/440V kW | A / 200/220V kW / 400/440V kW | A / 200/220V kW / 400/440V kW | A / 200/220V kW / 400/440V kW |
| | 25 / 5.5 / 11 | 32 / 7.5 / 15 | 45 / 11 / 22 | 7.1 / 1.5 / – | 100 / – / 55 | 225 / 55 / 110 |
| | 16 / 3.7 / 7.5 | | 40 / – / 18.5 | 5 / – / 2.2 | 90 / 22 / 45 | 200 / – / – |
| | 12 / – / 5.5 | | 32 / 7.5 / 15 | 4 / 0.75 / 1.5 | 71 / 18.5 / 37 | 175 / 45 / 90 |
| | 10 / 2.2 / – | | 25 / 5.5 / 11 | | 63 / 15 / 30 | 150 / 37 / 75 |
| | 8 / – / 3.7 | | 16 / 3.7 / 7.5 | | 45 / 11 / 22 | 125 / 30 / – |
| | 7.1 / 1.5 / – | | 12 / – / 5.5 | | (40) / – / 19 | |
| | 5 / – / 2.2 | | 10 / 2.2 / – | | 32 / 7.5 / 15 | |
| | 4 / 0.75 / 1.5 | | 8 / – / 3.7 | | (25) / 5.5 / 11 | |
| | | | | | (16) / 3.7 / 7.5 | |
| | | | | | (12.5) / – / 5.5 | |
| Number of poles | 3 | 3 | 3 | 3 | 3 | 3 |
| Rated insulation voltage Ui (V) | 500 | 500 | 500 | 500 | 500 | 500 |
| Rated short-circuit breaking capacities (kA) — IEC 60947-2 EN 60947-2 (Icu/Ics) AC 440V | 2.5/2.5 | 2.5/2.5 | 2.5/2.5 | 7.5/7.5 | 25/25 | 36/36 |
| 415V | 2.5/2.5 | 2.5/2.5 | 2.5/2.5 | 7.5/7.5 | 30/30 | 36/36 |
| 400V | 5/5 | 5/5 | 5/5 | 7.5/7.5 | 30/30 | 36/36 |
| 380V | 5/5 | 5/5 | 5/5 | 7.5/7.5 | 30/30 | 36/36 |
| 230V | 7.5/7.5 | 7.5/7.5 | 7.5/7.5 | 15/15 | 50/50 | 85/85 |
| Rated impulse withstand voltage Uimp (kV) | 8 | 8 | 8 | 8 | 8 | 8 |
| Current | AC | AC | AC | AC | AC | AC |
| Suitability for isolation | Compatible | Compatible | Compatible | Compatible | Compatible | Compatible |
| Reverse connection | Possible | Possible | Possible | Possible | Possible | Possible |
| Number of operating cycles — Without current | 10,000 | 10,000 | 10,000 | 15,000 | 25,000 | 25,000 |
| With current (440VAC) | 6,000 | 6,000 | 6,000 | 8,000 | 10,000 | 10,000 |
| Utilization category | A | A | A | A | A | A |
| Pollution degree | 3 | 3 | 3 | 3 | 3 | 3 |
| EMC environment condition (environment A or B) | N/A | N/A | N/A | N/A | N/A | N/A |
| Overall dimensions (mm) — a | 75 | 75 | 75 | 75 | 90 | 105 |
| b | 130 | 130 | 130 | 130 | 130 | 165 |
| c | 68 | 68 | 68 | 68 | 68 | 68 |
| ca | 90 | 90 | 90 | 90 | 90 | 92 |
| Mass of front-face type (kg) | 0.65 | 0.65 | 0.65 | 0.7 | 1.0 | 1.6 |
| Installation and connections — Front connection (F) — Page | ●Screw terminal | ●Screw terminal | ●Screw terminal | ●Screw terminal | ●Screw terminal | ●Screw terminal |
| Solderless (BOX) terminal (SL) — 94 | – | – | – | – | ● | ● |
| Rear (B) | ●Round stud | ●Round stud | ●Round stud | ●Round stud | ●Bar stud | ●Bar stud |
| Plug-in (PM) | ● | ● | ● | ● | ● | ● |
| Cassette-type accessories — Alarm switch (AL) — 104 | ● (*1) | ● (*1) | ● (*1) | ● (*1) | ● (*1) | ● (*1) |
| Auxiliary switch (AX) | ● (*1) | ● (*1) | ● (*1) | ● (*1) | ● (*1) | ● (*1) |
| Shunt trip (SHT) | ● (*1) | ● (*1) | ● (*1) | ● (*1) | ● (*1) | ● (*1) |
| Undervoltage trip (UVT) | ● (*1) | ● (*1) | ● (*1) | ● (*1) | ● (*1) | ● (*1) |
| With lead-wire terminal block (SLT) — 116 | ● | ● | ● | ● | ● | ● |
| External accessories — Enclosure — Closed (S) — 132 | ● | ● | ● | ● | ● | ● |
| Dustproof (I) | ● | ● | ● | ● | ● | ● |
| Waterproof (W) | ● | ● | ● | ● | ● | ● |
| Electrical operation device (NFM) — 135 | – | – | – | – | ● (*3) | ● (*3) |
| Mechanical interlock (MI) (*2) — Panel mounting — 131 | ● | ● | ● | ● | ● | ● |
| Breaker mounting | ● | ● | ● | ● | ● | ● |
| Handle lock device — LC — 129 | ● | ● | ● | ● | ● | ● |
| HL | ● | ● | ● | ● | ● | ● |
| HL-S | ● | ● | ● | ● | ● | ● |
| External operating handle — (F) — 119 | ● | ● | ● | ● | ● | ● |
| (V) | ● | ● | ● | ● | ● | ● |
| Terminal cover (TC-L, TC-S, TTC, BTC, PTC) — 123 | ● | ● | ● | ● | ● | ● |
| Rear stud (B-ST) — 96 | ● | ● | ● | ● | ● | ● |
| Plug-in (PM) | ● | ● | ● | ● | ● | ● |
| IEC 35mm rail mounting adapters — 139 | ● | ● | ● | ● | – | – |
| CE marking | Self-declaration | Self-declaration | Self-declaration | Self-declaration | Self-declaration | TÜV approval |
| CCC recognition | Recognition in process | Recognition in process | Recognition in process | Recognition in process | Recognition in process | Recognition in process |
| Marine use approval (NK, LR, ABS, GL) | ☆ | ☆ | ☆ | ☆ | ☆ | ☆ |
| Automatic tripping device | Thermal-magnetic | Thermal-magnetic | Thermal-magnetic | Thermal-magnetic | Thermal-magnetic | Thermal-magnetic |
| Trip button | Equipped | Equipped | Equipped | Equipped | Equipped | Equipped |
| Page of Characteristics and dimensions | 144 | | 144 | | 146 | 150 |

Notes: *1 The cassette type design makes it easy for customer to install. Available for installation on side (excluding UVT).
*2 Not isolation compatible.
*3 Place an order of other models in conjunction with the circuit breaker.

Remarks: 1. The motor circuit breakers do not have an applicable rated motor capacity. Select a motor circuit breaker based on the total load current of the motor.
2. Products with rating parenthesized are produced when an order is placed.
3. Specify "P-LT" when using a plug-in product with a lead wire terminal block.
4. The circuit breaker has the rated short circuit breaking capacity specified in the shaded cells.
5. Please refer to "Table 4-17", of Page 75 for details.

## UL 489 Listed Molded Case Circuit Breakers

| Frame (A) | | | | 50 | | 100 | | 125 | | | | | |
|---|---|---|---|---|---|---|---|---|---|---|---|---|---|
| Model | | | | NF50-SVFU | | NF100-CVFU | | NF125-SVU | | | | NF125-HVU | |
| Image | | | | | | | | | | | | | |
| Rated current In (A) (*4) Rated ambient temperture 40°C (IEC 30°C) | | | | (3) 5 10 15 20 30 40 50 | | 60 (70) 75 (80) (90) 100 | | 15 20 30 40 50 60 (70) 75 (80) (90) 100 | | 125 | | 15 20 30 40 50 60 (70) 75 (80) (90) 100 | 125 |
| Number of poles | | | | 2 | 3 | 2 | 3 | 2 | 3 | 2 | 3 | 3 | 3 |
| Rated short-circuit breaking capacities (kA) | UL 489 CSA C22.2 No.5-02 | Rated voltage | AC (V) | 240 | | 240 | | 480 | | 480 | | 600Y/347 | 600Y/347 |
| | | | DC (V) | – | | – | | – | | – | | – | – |
| | | AC | 600Y/347V | – | | – | | – | | – | | 18 | 18 |
| | | | 480V | – | | – | | 30 | | 30 | | 50 | 50 |
| | | | 480Y/277V | – | | – | | – | | – | | – | – |
| | | | 240V | 14 | | 14 | | 50 | | 50 | | 100 | 100 |
| | | | 120V | – | | – | | – | | – | | – | – |
| | | DC | 60V | – | | – | | – | | – | | – | – |
| | IEC 60947-2 EN 60947-2 (Icu/Ics) | Rated insulation voltage Ui (V) | | 440 | | 600 | | 690 | | 690 | | 690 | 690 |
| | | AC | 690V | – | | – | | 8/4 | | 8/4 | | 10/5 | 10/5 |
| | | | 500V | – | | 7.5/4 | | 18/9 | | 18/9 | | 25/13 | 25/13 |
| | | | 440V | 7.5/4 | | 10/5 | | 30/15 | | 30/15 | | 50/25 | 50/25 |
| | | | 415V | 10/5 | | 10/5 | | 30/15 | | 30/15 | | 50/25 | 50/25 |
| | | | 400V | 10/5 | | 10/5 | | 30/15 | | 30/15 | | 50/25 | 50/25 |
| | | | 380V | 10/5 | | 10/5 | | 30/15 | | 30/15 | | 50/25 | 50/25 |
| | | | 230V | 15/8 | | 15/8 | | 50/25 | | 50/25 | | 100/50 | 100/50 |
| | | DC | 250V | – | | – | | – | | – | | – | – |
| | | | 60V | – | | – | | – | | – | | – | – |
| Rated impulse withstand voltage Uimp (kV) | | | | 6 | | 8 | | 8 | | 8 | | 8 | 8 |
| Current (*1) | | | | AC | | AC | | AC | | AC | | AC | AC |
| Suitability for isolation | | | | Compatible | | Compatible | | Compatible | | Compatible | | Compatible | Compatible |
| Reverse connection | | | | – | | Possible | | Possible | | Possible | | Possible | Possible |
| Utilization category | | | | A | | A | | A | | A | | A | A |
| Pollution degree | | | | 3 | | 3 | | 3 | | 3 | | 3 | 3 |
| EMC environment condition (environment A or B) | | | | N/A | | N/A | | N/A | | N/A | | N/A | N/A |
| Overall dimensions (mm) | | | a | 36 | 54 | 50 | 75 | 90 | | 90 | | 90 | 90 |
| | | | b | 120 | | 150 | | 160 | | 160 | | 160 | 160 |
| | | | c | 68 | | 68 | | 68 | | 68 | | 68 | 68 |
| | | | ca | 90 | | 90 | | 90 | | 90 | | 90 | 90 |
| Mass of front-face type (kg) | | | | 0.3 | 0.45 | 0.55 | 0.8 | 1.0 | 1.1 | 1.0 | 1.1 | 1.1 | 1.1 |
| Installation and connections | Front (F) | Screw terminal | (AMP-N) | Page | | | | | | | | | |
| | | Solderless terminal | (SL) | 94 | – | ● | | ● | | ● | | ● | ● |
| | | Bar | (BAR) | | – | ● (*5) | | ● | | ● | | ● | ● |
| | | Power supply solderless load bar | (SL/BAR) | | – | ● (*5, 6) | | ● (*6) | | ● (*6) | | ● (*6) | ● (*6) |
| Cassette-type accessories (*2) | Alarm switch | | (AL) | 104 | ● (*7) | ● (*7) | | ● (*7) | | ● (*7) | | ● (*7) | ● (*7) |
| | Auxiliary switch | | (AX) | | ● (*7) | ● (*7) | | ● (*7) | | ● (*7) | | ● (*7) | ● (*7) |
| | Shunt trip | | (SHT) | | ● (*7) | ● (*7) | | ● (*7) | | ● (*7) | | ● (*7) | ● (*7) |
| | Undervoltage trip | | (UVT) | | ● | ● (*7) | | ● (*7) | | ● (*7) | | ● (*7) | ● (*7) |
| | With lead-wire terminal block | | (SLT) | 116 | ● | ● | | ● | | ● | | ● | ● |
| External accessories (*2) | Mechanical interlock | | (MI) | 131 | – | – | | – | | – | | – | – |
| | Handle lock device | | (HL) | 129 | ● | ● | | ● | | ● | | ● | ● |
| | | | (HL-S) | | ● | ● | | ● | | ● | | ● | ● |
| | External operating handle | | (F) | 119 | ● | ● | | ● | | ● | | ● | ● |
| | | | (V) | | ● | ● | | ● | | ● | | ● | ● |
| | Terminal cover | Large terminal cover | (TC-L) | 123 | ● | ● | | ● | | ● | | ● | ● |
| | | Small terminal cover | (TC-S) | 124 | – (*3) | – (*3) | | – (*3) | | – (*3) | | – (*3) | – (*3) |
| | IEC 35mm rail mounting adapters | | | 139 | Standard accessory | Standard accessory | | – | | – | | – | – |
| CE marking | | | | | TÜV approval | TÜV approval | | TÜV approval | | TÜV approval | | TÜV approval | TÜV approval |
| CCC recognition | | | | | Recognition in process | Recognition in process | | Recognition in process | | Recognition in process | | Recognition in process | Recognition in process |
| Automatic tripping device | | | | | Thermal-magnetic | Thermal-magnetic | | Thermal-magnetic | | Thermal-magnetic | | Thermal-magnetic | Thermal-magnetic |
| Trip button | | | | | Equipped | Equipped | | Equipped | | Equipped | | Equipped | Equipped |
| Page of Characteristics and dimensions | | | | | 200 | 202 | | 204 | | | | 204 | |

Notes:
- *1 The trip action characteristics differ between AC and DC for products that are compatible with both AC and DC.
- *2 These accessories differ from the general and CE/CCC products in specifications. Please consult us for details.
- *3 The standard structure conforms to IP20 (finger protection).
- *4 The rated ambient temperature for NF50-SVFU, NF100-CVFU, NF125-SVU and NF125-HVU is specified at 40°C also by IEC.
- *5 The circuit breakers with busbar terminals have insulation barriers.
- *6 Circuit breakers for power supply solderless load screw terminal (SL/AMP-N) are available. In this case, a busbar terminal is not provided on the load side.
- *7 These cassette type circuit breakers can be installed by the customer. They can be installed with their side faces in close contact (except NF50-SVFU and UVT).

Remarks:
1. Products with rated current parenthesized are produced when an order is placed.
2. The circuit breaker has the rated short-circuit breaking capacity specified in the shaded cells.
3. The 3-pole circuit breakers can be used on single-phase circuits.

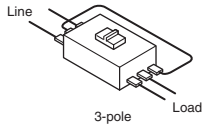


| US UL Standard 489 | |
|---|---|
| UL File No.E167691 | Body |
| UL File No.E108284 | Accessories |

| Canada CSA Standard |
|---|
| C22.2 No.5 |

## UL 489 Listed Molded Case Circuit Breakers

| Frame (A) | | | | 225 | 250 | | | | |
|---|---|---|---|---|---|---|---|---|---|
| Model | | | | NF225-CWU | | NF250-SVU | | NF250-HVU | |
| Image | | | | | | | | | |
| Rated current In (A) (*5) Rated ambient temperture 40°C (IEC 30°C) | | | | 125 150 175 200 225 | (250) | 125 150 175 200 225 | 250 | 125 150 175 200 225 | 250 |
| Number of poles | | | | 3 | 3 | 3 | 3 | 3 | 3 |
| Rated short-circuit breaking capacities (kA) | UL 489 CSA C22.2 No.5-02 | Rated voltage | AC (V) | 240 | 240 | 480 | 480 | 600Y/347 | 600Y/347 |
| | | | DC (V) | – | – | – | – | – | – |
| | | AC | 600Y/347V | – | – | – | – | 18 | 18 |
| | | | 480V | – | – | 35 | 35 | 50 | 50 |
| | | | 480Y/277V | – | – | – | – | – | – |
| | | | 240V | 35 | 35 | 65 | 65 | 100 | 100 |
| | | | 120V | – | – | – | – | – | – |
| | | DC | 60V | – | – | – | – | – | – |
| | IEC 60947-2 EN 60947-2 (Icu/Ics) | Rated insulation voltage Ui (V) | | 600 | 600 | 690 | 690 | 690 | 690 |
| | | AC | 690V | – | – | 8/4 | 8/4 | 10/5 | 10/5 |
| | | | 500V | 10/5 | – | 25/13 | 25/13 | 36/18 | 36/18 |
| | | | 440V | 15/8 | 15/8 | 36/18 | 36/18 | 50/25 | 50/25 |
| | | | 415V | 18/9 | 18/9 | 36/18 | 36/18 | 50/25 | 50/25 |
| | | | 400V | 18/9 | 18/9 | 36/18 | 36/18 | 50/25 | 50/25 |
| | | | 380V | 18/9 | 18/9 | 36/18 | 36/18 | 50/25 | 50/25 |
| | | | 230V | 35/18 | 35/18 | 65/33 | 65/33 | 100/50 | 100/50 |
| | | DC | 250V (*3) | 10/5 | 10/5 | – | – | – | – |
| | | | 60V | – | – | – | – | – | – |
| Rated impulse withstand voltage Uimp (kV) | | | | 6 | 6 | 8 | 8 | 8 | 8 |
| Current (*1) | | | | AC/DC compatible | AC/DC compatible | AC | AC | AC | AC |
| Suitability for isolation | | | | Compatible | Compatible | Compatible | Compatible | Compatible | Compatible |
| Reverse connection | | | | Possible | Possible | Possible | Possible | Possible | Possible |
| Utilization category | | | | A | A | A | A | A | A |
| Pollution degree | | | | 3 | 3 | 3 | 3 | 3 | 3 |
| EMC environment condition (environment A or B) | | | | N/A | N/A | N/A | N/A | N/A | N/A |
| Overall dimensions (mm) | 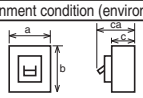 | | a | 105 | 105 | 105 | 105 | 105 | 105 |
| | | | b | 165 | 165 | 185 | 185 | 185 | 185 |
| | | | c | 68 | 68 | 68 | 68 | 68 | 68 |
| | | | ca | 92 | 92 | 92 | 92 | 92 | 92 |
| Mass of front-face type (kg) | | | | 1.5 | 1.5 | 1.6 | 1.6 | 1.6 | 1.6 |
| Installation and connections | Front (F) | Screw terminal | (AMP-N) | Page | ● | ● | ● | ● | ● | ● |
| | | Solderless terminal | (SL) | 94 | – | – | ● | ● | ● | ● |
| | | Bar | (BAR) | | ● | ● | ● | ● | ● | ● |
| | | Power supply solderless load bar | (SL/BAR) | | – | – | ●(*8) | ●(*8) | ●(*8) | ●(*8) |
| Cassette-type accessories (*2) | Alarm switch | | (AL) | 104 | ● | ● | ●(*7) | ●(*7) | ●(*7) | ●(*7) |
| | Auxiliary switch | | (AX) | | ● | ● | ●(*7) | ●(*7) | ●(*7) | ●(*7) |
| | Shunt trip | | (SHT) | | ● | ● | ●(*7) | ●(*7) | ●(*7) | ●(*7) |
| | Undervoltage trip | | (UVT) | | ● | ● | ●(*7) | ●(*7) | ●(*7) | ●(*7) |
| | With lead-wire terminal block | | (SLT) | 116 | ● | ● | ● | ● | ● | ● |
| External accessories (*2) | Mechanical interlock | | (MI) | 131 | ●(*6) | ●(*6) | – | – | – | – |
| | Handle lock device | | (HL) | 129 | ● | ● | ● | ● | ● | ● |
| | | | (HL-S) | | ● | ● | ● | ● | ● | ● |
| | External operating handle | | (F) | 119 | ● | ● | ● | ● | ● | ● |
| | | | (V) | | ● | ● | ● | ● | ● | ● |
| | Terminal cover | Large terminal cover | (TC-L) | 123 | ● | ● | ● | ● | ● | ● |
| | | Small terminal cover | (TC-S) | 124 | – (*4) | – (*4) | – (*4) | – (*4) | – (*4) | – (*4) |
| | IEC 35mm rail mounting adapters | | | 139 | – | – | – | – | – | – |
| CE marking | | | | | TÜV approval | Self-declaration | TÜV approval | TÜV approval | TÜV approval | TÜV approval |
| CCC recognition | | | | | Recognition in process | – | Recognition in process | Recognition in process | Recognition in process | Recognition in process |
| Automatic tripping device | | | | | Thermal-magnetic | Thermal-magnetic | Thermal-magnetic | Thermal-magnetic | Thermal-magnetic | Thermal-magnetic |
| Trip button | | | | | Equipped | Equipped | Equipped | Equipped | Equipped | Equipped |
| Page of Characteristics and dimensions | | | | | 206 | | 208 | | 208 | |

Notes:
- *1 The trip action characteristics differ between AC and DC for products that are compatible with both AC and DC.
- *2 These accessories differ from the general products in specifications. Please consult us for details.
- *3 When using a 3-pole circuit breaker, use two poles. When wired as shown right, NF225-CWU can be used at up to 400 V DC.
- *4 Since NF225-CWU comes with a protective cover, it has an IP20 (finger protection) structure as standard. Other models have IP20 (finger protection) structures as standard.
- *5 The rated ambient temperature for NF250-SVU and NF250-HVU is specified at 40°C also by IEC.
- *6 Not isolation compatible.
- *7 These cassette type circuit breakers can be installed by the customer. They can be installed with their side faces in close contact (except UVT).
- *8 Circuit breakers for power supply solderless load screw terminal (SL/AMP-N) are available. In this case, a busbar terminal is not provided on the load side.

Remarks:
1. Products with rated current parenthesized are produced when an order is placed.
2. The circuit breaker has the rated short-circuit breaking capacity specified in the shaded cells.
3. The 3-pole circuit breakers can be used on single-phase circuits.

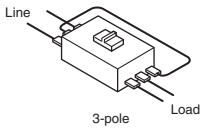


| US UL Standard 489 | |
|---|---|
| UL File No.E167691 | Body |
| UL File No.E108284 | Accessories |

| Canada CSA Standard |
|---|
| C22.2 No.5 |

## UL 489 Listed Molded Case Circuit Breakers

| Frame (A) | | | | 400 | 600 |
|---|---|---|---|---|---|
| Model | | | | NF-SKW | NF-SLW |
| Image | | | | | |
| Rated current In (A) Rated ambient temperture 40°C | | | | 250 300 350 400 | 500 600 |
| Number of poles | | | | 3 | 3 |
| Rated short-circuit breaking capacities (kA) | UL 489 CSA C22.2 No.5-02 | Rated voltage | AC (V) | 600Y/347 | 600Y/347 |
| | | | DC (V) | – | – |
| | | AC | 600Y/347V | 20 | 20 |
| | | | 480V | 35 | 35 |
| | | | 480Y/277V | – | – |
| | | | 240V | 65 | 85 |
| | | | 120V | – | – |
| | | DC | 60V | – | – |
| | IEC 60947-2 EN 60947-2 (Icu/Ics) | Rated insulation voltage Ui (V) | | 690 | 690 |
| | | AC | 690V | 10/10 (5/5) (*5) | 10/10 |
| | | | 500V | 30/30 (25/25) (*5) | 30/30 |
| | | | 440V | 42/42 (36/36) (*5) | 42/42 |
| | | | 415V | 45/45 (36/36) (*5) | 45/45 |
| | | | 400V | 45/45 (36/36) (*5) | 45/45 |
| | | | 380V | 50/50 (42/42) (*5) | 50/50 |
| | | | 230V | 85/85 (65/65) (*5) | 85/85 |
| | | DC | 250V | – | – |
| | | | 60V | – | – |
| Rated impulse withstand voltage Uimp (kV) | | | | 8 | 8 |
| Current (*1) | | | | AC | AC |
| Suitability for isolation | | | | Compatible | Compatible |
| Reverse connection | | | | Possible | Possible |
| Utilization category | | | | A | A |
| Pollution degree | | | | 3 | 3 |
| EMC environment condition (environment A or B) | | | | N/A | N/A |
| Overall dimensions (mm) | 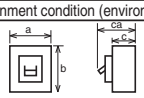 | | a | 140 | 210 |
| | | | b | 257 | 275 |
| | | | c | 103 | 103 |
| | | | ca | 155 | 155 |
| Mass of front-face type (kg) | | | | 5.7 | 9.6 |
| Installation and connections | Front (F) | Screw terminal | (AMP-N) Page | – | – |
| | | Solderless terminal | (SL) 94 | ● | ● |
| | | Bar | (BAR) | ●(*3) | ●(*3) |
| | | Power supply solderless load bar | (SL/BAR) | ●(*3) | ● |
| Cassette-type accessories (*2) | Alarm switch | | (AL) 104 | ● | ● |
| | Auxiliary switch | | (AX) | ● | ● |
| | Shunt trip | | (SHT) | ● | ● |
| | Undervoltage trip | | (UVT) | ● | ● |
| | With lead-wire terminal block | | (SLT) 116 | ● | ● |
| External accessories (*2) | Mechanical interlock | | (MI) 131 | ●(*6) | ●(*6) |
| | Handle lock device | | (HL) 129 | ●(*4) | ●(*4) |
| | | | (HL-S) | – | – |
| | External operating handle | | (F) 119 | ● | ● |
| | | | (V) | ● | ● |
| | Terminal cover | Large terminal cover | (TC-L) 123 | ● | ● |
| | | Small terminal cover | (TC-S) 124 | – | – |
| | IEC 35mm rail mounting adapters | | 139 | – | – |
| CE marking | | | | TÜV approval | TÜV approval |
| CCC recognition | | | | – | – |
| Automatic tripping device | | | | Thermal-magnetic | Thermal-adjustable magnetic |
| Trip button | | | | Equipped | Equipped |
| Page of Characteristics and dimensions | | | | 210 | 212 |

Notes:
- *1 The trip action characteristics differ between AC and DC for products that are compatible with both AC and DC.
- *2 These accessories differ from the general products in specifications. Please consult us for details.
- *3 The circuit breakers with busbar terminals have insulation barriers.
- *4 Please consult us. (Models which are not UL or TUV certified but can be locked in the ON and OFF positions are available.)
- *5 The values in parentheses apply to the circuit breakers with solderless terminals.
- *6 Not isolation compatible.

Remarks:
1. Products with rated current parenthesized are produced when an order is placed.
2. The circuit breaker has the rated short-circuit breaking capacity specified in the shaded cells.
3. The 3-pole circuit breakers can be used on single-phase circuits.

| US UL Standard 489 | |
|---|---|
| UL File No.E167691 | Body |
| UL File No.E108284 | Accessories |

| Canada CSA Standard |
|---|
| C22.2 No.5 |

## UL 489 Listed Earth Leakage Circuit Breakers (Harmonic Surge Ready)

| Frame (A) | 50 | | 100 | 125 | | | | 250 | | | |
|---|---|---|---|---|---|---|---|---|---|---|---|
| Model | NV50-SVFU | | NV100-CVFU | NV125-SVU | | NV125-HVU | | NV250-SVU | | NV250-HVU | |
| Image | | | | | | | | | | | |
| Rated current In (A) Rated ambient temperture 40°C | (5) (10) 15 20 30 40 50 | | 60 (70) 75 (80) (90) 100 | 15 20 30 (40) 50 60 75 100 | 125 | 15 20 30 (40) 50 60 75 100 | 125 | 125 150 175 200 225 | 250 | 125 150 175 200 225 | 250 |
| Number of poles | 2 | 3 | 3 | 3 | 3 | 3 | 3 | 3 | 3 | 3 | 3 |
| Phase line (*1) | 1ϕ2W | 3ϕ3W, 1ϕ2W | 3ϕ3W, 1ϕ2W | 3ϕ3W, 1ϕ2W | 3ϕ3W, 1ϕ2W | 3ϕ3W, 1ϕ2W | 3ϕ3W, 1ϕ2W | 3ϕ3W, 1ϕ2W | 3ϕ3W, 1ϕ2W | 3ϕ3W, 1ϕ2W | 3ϕ3W, 1ϕ2W |
| Rated operational voltage AC V — UL 489 | 120-240 | | 120-240 | 120-480 | 120-480 | 120-480 | 120-480 | 120-480 | 120-480 | 120-480 | 120-480 |
| Rated operational voltage AC V — IEC 60947-2 EN 60947-2 | 100-240 | 100-440 | 100-440 | 100-440 | 100-440 | 100-440 | 100-440 | 100-440 | 100-440 | 100-440 | 100-440 |
| High-speed type — Rated current sensitivity I△n mA | 30 50 | 30 50 100 | 30, 50, 100/200/500 selectable | 30, 50, 100/200/500 selectable | 30, 50, 100/200/500 selectable | 30, 50, 100/200/500 selectable | 30, 50, 100/200/500 selectable | 30, 50, 100/200/500 selectable | 30, 50, 100/200/500 selectable | 30, 50, 100/200/500 selectable | 30, 50, 100/200/500 selectable |
| High-speed type — Pickup current, UL 1053 | 75% of I△n | | 75% of I△n | 75% of I△n | 75% of I△n | 75% of I△n | 75% of I△n | 75% of I△n | 75% of I△n | 75% of I△n | 75% of I△n |
| High-speed type — Max. operating time (s) at 5I△n (*4) | 0.04 | | 0.04 | 0.04 | 0.04 | 0.04 | 0.04 | 0.04 | 0.04 | 0.04 | 0.04 |
| Earth leakage indication system | Display window | | Mechanical type (button) | Mechanical type (button) | Mechanical type (button) | Mechanical type (button) | Mechanical type (button) | Mechanical type (button) | Mechanical type (button) | Mechanical type (button) | Mechanical type (button) |
| Rated short-circuit breaking capacities (kA) — UL 489 CSA C22.2 No.5-02 — AC 480V | – | | – | 30 | 30 | 50 | 50 | 35 | 35 | 50 | 50 |
| UL 489 CSA C22.2 No.5-02 — AC 240V | 14 | | 14 | 50 | 50 | 100 | 100 | 65 | 65 | 100 | 100 |
| UL 489 CSA C22.2 No.5-02 — AC 120V | 14 | | 14 | 50 | 50 | 100 | 100 | 65 | 65 | 100 | 100 |
| IEC 60947-2 EN 60947-2 (Icu/Ics) — AC 440V | – | 7.5/4 | 10/5 | 30/15 | 30/15 | 50/25 | 50/25 | 36/18 | 36/18 | 50/25 | 50/25 |
| IEC 60947-2 EN 60947-2 (Icu/Ics) — AC 400V | – | 10/5 | 10/5 | 30/15 | 30/15 | 50/25 | 50/25 | 36/18 | 36/18 | 50/25 | 50/25 |
| IEC 60947-2 EN 60947-2 (Icu/Ics) — AC 230V | 15/8 | 15/8 | 15/8 | 50/25 | 50/25 | 100/50 | 100/50 | 65/33 | 65/33 | 100/50 | 100/50 |
| IEC 60947-2 EN 60947-2 (Icu/Ics) — AC 100V | 15/8 | 15/8 | 15/8 | 50/25 | 50/25 | 100/50 | 100/50 | 65/33 | 65/33 | 100/50 | 100/50 |
| Rated impulse withstand voltage Uimp (kV) | 4 | 6 | 6 | 6 | 6 | 6 | 6 | 6 | 6 | 6 | 6 |
| Suitability for isolation | Compatible | | Compatible | Compatible | Compatible | Compatible | Compatible | Compatible | Compatible | Compatible | Compatible |
| Reverse connection (below 240VAC) | – | | Possible | Possible | Possible | Possible | Possible | Possible | Possible | Possible | Possible |
| Utilization category | A | | A | A | A | A | A | A | A | A | A |
| Pollution degree | 2 | | 2 | 2 | 2 | 2 | 2 | 2 | 2 | 2 | 2 |
| EMC environment condition (environment A or B) | A | | A | A | A | A | A | A | A | A | A |
| Overall dimensions (mm) — a | 36 | 54 | 75 | 90 | 90 | 90 | 90 | 105 | 105 | 105 | 105 |
| Overall dimensions (mm) — b | 120 | | 150 | 160 | 160 | 160 | 160 | 185 | 185 | 185 | 185 |
| Overall dimensions (mm) — c | 68 | | 68 | 68 | 68 | 68 | 68 | 68 | 68 | 68 | 68 |
| Overall dimensions (mm) — ca | 90 | | 90 | 90 | 90 | 90 | 90 | 92 | 92 | 92 | 92 |
| Mass of front-face type (kg) | 0.4 | 0.5 | 0.9 | 1.2 | 1.2 | 1.2 | 1.2 | 1.8 | 1.8 | 1.8 | 1.8 |
| Installation and connections — Front (F) — Screw terminal (AMP-N) Page | ● | | ● | ● | ● | ● | ● | ● | ● | ● | ● |
| Installation and connections — Front (F) — Solderless terminal (SL) 94 | – | | ● | ● | ● | ● | ● | ● | ● | ● | ● |
| Installation and connections — Front (F) — Bar (BAR) 94 | – | | ●(*5) | ● | ● | ● | ● | ● | ● | ● | ● |
| Installation and connections — Front (F) — Power supply solderless load bar (SL/BAR) 94 | – | | ●(*5, *6) | ●(*6) | ●(*6) | ●(*6) | ●(*6) | ●(*6) | ●(*6) | ●(*6) | ●(*6) |
| Cassette-type accessories (*2) — Alarm switch (AL) 104 | – | ●(*8) | ●(*8) | ●(*8) | ●(*8) | ●(*8) | ●(*8) | ●(*8) | ●(*8) | ●(*8) | ●(*8) |
| Cassette-type accessories (*2) — Auxiliary switch (AX) 104 | – | ●(*8) | ●(*8) | ●(*8) | ●(*8) | ●(*8) | ●(*8) | ●(*8) | ●(*8) | ●(*8) | ●(*8) |
| Cassette-type accessories (*2) — Shunt trip (SHT) 104 | – | ●(*8) | ●(*8) | ●(*8) | ●(*8) | ●(*8) | ●(*8) | ●(*8) | ●(*8) | ●(*8) | ●(*8) |
| Cassette-type accessories (*2) — Undervoltage trip (UVT) 104 | – | ● | ●(*8) | ●(*8) | ●(*8) | ●(*8) | ●(*8) | ●(*8) | ●(*8) | ●(*8) | ●(*8) |
| Cassette-type accessories (*2) — With lead-wire terminal block (SLT) 116 | – | ● | ● | ● | ● | ● | ● | ● | ● | ● | ● |
| Cassette-type accessories (*2) — Test button module (TBM) 116 | ●(*9) | | – | ●(*9) | ●(*9) | ●(*9) | ●(*9) | ●(*9) | ●(*9) | ●(*9) | ●(*9) |
| External accessories (*2) — Mechanical interlock (MI) 131 | – | | – | – | – | – | – | – | – | – | – |
| External accessories (*2) — Handle lock device (HL) 129 | ● | | ● | ● | ● | ● | ● | ● | ● | ● | ● |
| External accessories (*2) — Handle lock device (HL-S) 129 | ● | | ● | ● | ● | ● | ● | ● | ● | ● | ● |
| External accessories (*2) — External operating handle (F) 119 | ● | | ● | ● | ● | ● | ● | ● | ● | ● | ● |
| External accessories (*2) — External operating handle (V) 119 | ● | | ● | ● | ● | ● | ● | ● | ● | ● | ● |
| External accessories (*2) — Terminal cover — Large terminal cover (TC-L) 123 | ● | | ● | ● | ● | ● | ● | ● | ● | ● | ● |
| External accessories (*2) — Terminal cover — Small terminal cover (TC-S) 124 | ●(*3) | | – (*3) | – (*3) | – (*3) | – (*3) | – (*3) | – (*3) | – (*3) | – (*3) | – (*3) |
| External accessories (*2) — IEC 35mm rail mounting adapters 139 | Standard accessory | | Standard accessory | – | – | – | – | – | – | – | – |
| CE marking | TÜV approval | | TÜV approval | TÜV approval | TÜV approval | TÜV approval | TÜV approval | TÜV approval | TÜV approval | TÜV approval | TÜV approval |
| CCC recognition | Recognition in process | | Recognition in process | Recognition in process | Recognition in process | Recognition in process | Recognition in process | Recognition in process | Recognition in process | Recognition in process | Recognition in process |
| Automatic tripping device | Thermal-magnetic | | Thermal-magnetic | Thermal-magnetic | Thermal-magnetic | Thermal-magnetic | Thermal-magnetic | Thermal-magnetic | Thermal-magnetic | Thermal-magnetic | Thermal-magnetic |
| Trip button | Equipped | | Equipped | Equipped | Equipped | Equipped | Equipped | Equipped | Equipped | Equipped | Equipped |
| Page of Characteristics and dimensions | 200 | | 202 | 204 | | 204 | | 208 | | 208 | |

Notes:
- *1 If using a 3-pole earth leakage circuit breaker as a 1-pole 2-phase device, connect the left and right poles and not the central pole.
- *2 These are different from general models in specifications. Consult us for the details.
- *3 The standard structure conforms to IP20 (finger protection).
- *4 The maximum operating time is 0.1 according to UL 1053.
- *5 The circuit breakers with busbar terminals have insulation barriers.
- *6 Circuit breakers for power supply solderless load screw terminal (SL/AMP-N) are available. In this case, a bar terminal is not provided on the load side.
- *7 Circuit breakers for 100 V AC do not have obtained CCC certificate.
- *8 These cassette type accessories can be installed by the customer. They can be installed with their side faces in close contact with circuit breakers (except NV50-SVFU and UVT).
- *9 Standard type is SLT equipped.

Remarks:
1. Products with rated current parenthesized are produced when an order is placed.
2.

| Rated operational voltage | Applicable circuit voltage | Available voltage range |
|---|---|---|
| 120-240V (UL) | 120/240V | 66-264V |
| 120-240-480V (UL) | 120/240/480V | 66-528V |
| 240V (UL) | 240V | 132-264V |
| 100-230V (IEC) | 100/110/200/220/230V | 85-253V |
| 100-240V (IEC) | 100/110/200/220/230/240V | 85-264V |
| 100-230-400-440V (IEC) 100-440V (IEC) | 100/110/200/220/ 230/240/254/265/ 380/400/415/440V | 85-484V |
| 230-400-440V (IEC) | 230/240/254/265/ 380/400/415/440V | 195-484V |

| US UL Standard 489 | |
|---|---|
| UL File No.E167691 | Body |
| UL File No.E108284 | Accessories |

| Canada CSA Standard |
|---|
| C22.2 No.144 |
| C22.2 No.5 |

## MDU Breakers

| Frame (A) | 250 | | | | 400 | | | | 630 | | | | 800 | | | |
|---|---|---|---|---|---|---|---|---|---|---|---|---|---|---|---|---|
| Model | NF250-SEV with MDU | | NF250-HEV with MDU | | NF400-SEP with MDU | | NF400-HEP with MDU | | NF630-SEP with MDU | | NF630-HEP with MDU | | NF800-SEP with MDU | | NF800-HEP with MDU | |
| Image | | | | | | | | | | | | | | | | |
| Rated current In (A) Rated ambient temperture 40°C | Adjustable 125-250A (12.5A Step) | | | | Adjustable 200 225 250 300 350 400 | | | | Adjustable 300 350 400 500 600 630 | | | | Adjustable 400 450 500 600 700 800 | | | |
| Number of poles | 3 | 4 | 3 | 4 | 3 | 4 | 3 | 4 | 3 | 4 | 3 | 4 | 3 | 4 | 3 | 4 |
| Phase line | 3ϕ3W, 1ϕ3W, 1ϕ2W | 3ϕ4W | 3ϕ3W, 1ϕ3W, 1ϕ2W | 3ϕ4W | 3ϕ3W, 1ϕ3W, 1ϕ2W | 3ϕ4W | 3ϕ3W, 1ϕ3W, 1ϕ2W | 3ϕ4W | 3ϕ3W, 1ϕ3W, 1ϕ2W | 3ϕ4W | 3ϕ3W, 1ϕ3W, 1ϕ2W | 3ϕ4W | 3ϕ3W, 1ϕ3W, 1ϕ2W | 3ϕ4W | 3ϕ3W, 1ϕ3W, 1ϕ2W | 3ϕ4W |
| Rated insulation voltage Ui (V) | 690 | | | | 690 | | | | 690 | | | | 690 | | | |
| Rated short-circuit breaking capacities (kA) — IEC 60947-2 (Icu/Ics) — AC — 690V | 8/8 | | 10/8 | | 10/10 | | 10/10 | | 10/10 | | 15/15 | | 10/10 | | 15/15 | |
| 500V | 18/18 | | 30/23 | | 30/30 | | 50/50 | | 30/30 | | 50/50 | | 30/30 | | 50/50 | |
| 440V | 36/36 | | 50/50 | | 42/42 | | 65/65 | | 42/42 | | 65/65 | | 42/42 | | 65/65 | |
| 415V | 36/36 | | 70/70 | | 45/45 | | 70/70 | | 45/45 | | 70/70 | | 45/45 | | 70/70 | |
| 400V | 36/36 | | 75/75 | | 45/45 | | 70/70 | | 45/45 | | 70/70 | | 45/45 | | 70/70 | |
| 380V | 36/36 | | 75/75 | | 45/45 | | 70/70 | | 45/45 | | 70/70 | | 45/45 | | 70/70 | |
| 230V | 85/85 | | 100/100 | | 85/85 | | 100/100 | | 85/85 | | 100/100 | | 85/85 | | 100/100 | |
| 200V | 85/85 | | 100/100 | | 85/85 | | 100/100 | | 85/85 | | 100/100 | | 85/85 | | 100/100 | |
| 100V | – | | – | | – | | – | | – | | – | | – | | – | |
| Rated impulse withstand voltage Uimp (kV) | 8 | | | | 8 | | | | 8 | | | | 8 | | | |
| Current | AC | | | | AC | | | | AC | | | | AC | | | |
| Suitability for isolation | Compatible | | | | Compatible | | | | Compatible | | | | Compatible | | | |
| Reverse connection (below 240VAC) | – | | | | – | | | | – | | | | – | | | |
| Number of operating cycles — Without current | 25,000 | | | | 6,000 | | | | 6,000 | | | | 4,000 | | | |
| Number of operating cycles — With current | 10,000 | | | | 1,000 | | | | 1,000 | | | | 500 | | | |
| Utilization category | A | | | | B | | | | B | | | | B | | | |
| Pollution degree | 3 | | | | 3 | | | | 3 | | | | 3 | | | |
| EMC environment condition (environment A or B) | A | | | | A | | | | A | | | | A | | | |
| Overall dimensions (mm) — a | 105 | 140 | 105 | 140 | 140 | 185 | 140 | 185 | 210 | 280 | 210 | 280 | 210 | 280 | 210 | 280 |
| b | 165 | | | | 257 | | | | 275 | | | | 275 | | | |
| c | 68 | | | | 103 | | | | 103 | | | | 103 | | | |
| ca | 92 | | | | 155 | | | | 155 | | | | 155 | | | |
| Mass of front-face type (Breaker mounting) (kg) | 1.8 | 2.3 | 1.8 | 2.3 | 6.2 | 8 | 6.2 | 8 | 10.7 | 13.8 | 10.7 | 13.8 | 11.1 | 14.4 | 11.1 | 14.4 |
| MDU installation | Breaker mounting, Panel mounting (*1) | | | | Breaker mounting, Panel mounting (*2) | | | | | | | | | | | |
| Installation and connections — Front (F) Page | ● | ● | ● | ● | ● | | | | ● | | | | ● | | | |
| Rear (*3) (B) 94 | ● | ● | ● | ● | ● | | | | ● | | | | ● | | | |
| Plug-in (PM) | – | | | | – | | | | – | | | | – | | | |
| Cassette-type accessories — Alarm switch (AL) 104 | ●(*4) | ● | ●(*4) | ● | ●(*4) | | | | ●(*4) | | | | ●(*4) | | | |
| Auxiliary switch (AX) | ●(*4) | ● | ●(*4) | ● | ●(*4) | | | | ●(*4) | | | | ●(*4) | | | |
| Shunt trip (SHT) | ●(*4) | ● | ●(*4) | ● | ●(*4) | | | | ●(*4) | | | | ●(*4) | | | |
| Undervoltage trip (UVT) | ●(*4) | ● | ●(*4) | ● | ● | | | | ● | | | | ● | | | |
| MDU transform AL, AX, AL + AX (MG) | ●(*4) | ● | ●(*4) | ● | ●(*4) | | | | ●(*4) | | | | ●(*4) | | | |
| With lead-wire terminal block (SLT) 116 | ● | ● | ● | ● | ● | | | | ● | | | | ● | | | |
| Alarm contact output (*5) — Pre-alarm (PAL) 118 | ● PAL 1a | | | | ● PAL 1a | | | | ● PAL 1a | | | | ● PAL 1a | | | |
| Trip-indicator (TI) | – | | | | ● PAL 1a, OAL 1a | | | | ● PAL 1a, OAL 1a | | | | ● PAL 1a, OAL 1a | | | |
| External accessories (*2) — Electrical operation device (*6) (NFM) 135 | Available only for the MDU panel mounting type | | | | Available only for the MDU panel mounting type. Disavailable alarm contact output. | | | | | | | | | | | |
| Mechanical interlock (MI) (*7) — Panel mounting 131 | ● | | | | ● | | | | ● | | | | ● | | | |
| Breaker mounting | Available only for the MDU panel mounting type | | | | | | | | | | | | | | | |
| Handle lock device — LC 129 | ● | | | | – | | | | – | | | | – | | | |
| HL | ● | | | | ● | | | | ● | | | | ● | | | |
| HL-S | Available only for the MDU panel mounting type | | | | | | | | | | | | | | | |
| External operating handle (F) 119 | Available only for the MDU panel mounting type | | | | | | | | | | | | | | | |
| (V) | Available only for the MDU panel mounting type | | | | | | | | | | | | | | | |
| Terminal cover — TC-L 123 | ●(*8) | ● | ●(*8) | ● | Available only for the MDU panel mounting type | | | | | | | | | | | |
| TC-S | ●(*8) | ● | ●(*8) | ● | – | | | | | | | | | | | |
| TTC | ●(*8) | ● | ●(*8) | ● | ●(*8) | | | | | | | | | | | |
| BTC | ●(*8) | ● | ●(*8) | ● | Available only for the MDU panel mounting type and line side | | | | | | | | | | | |
| Rear stud (B-ST) 96 | ● | ●(*8) | ● | ● | – | | | | – | | | | – | | | |
| Automatic tripping device | Electronic (effective value detection) | | | | Electronic (effective value detection) | | | | Electronic (effective value detection) | | | | Electronic (effective value detection) | | | |
| MDU measurement specifications | See. 36 | | | | | | | | | | | | | | | |
| Trip button | Equipped | | | | Equipped | | | | Equipped | | | | Equipped | | | |
| Page of Characteristics and dimensions | 214 | | | | 216 | | | | 218 | | | | 218 | | | |

Notes:
- *1 In the case of panel mounting, the panel holder plate, the screws and the MDU connection cable (2m) are packed as standard. The MDU connection cable of 0.5m, 3m, 5m and 10m can be specified when ordering. And dimension of the front panel drilling of the breaker is different between breaker mounting and panel mounting.
- *2 In the case of panel mounting, the panel holder plate, the nuts and the MDU connection cable (2m) are packed as standard. The MDU connection cable of 0.5m, 3m, 5m and 10m can be specified when ordering.
- *3 For 250AF breakers, the studs are packed as standard. For 400/630/800AF breakers, please specify the installation angle of the studs because it is installed to the breaker before shipping.
- *4 It can be installed to the breaker by each customer.
- *5 In the case of the breaker with alarm contact output, the module (terminal) is attached to the right side of the breaker and the control power (AC/DC 100-240V 50-60Hz 5VA) is needed. The Output function for alarm output of PAL/EAL can set “Self-holding” or “Auto-reset”. Default setup is “Auto-reset”.
- *6 For 250AF of electrical operation device, AL is used for the trip indication as standard. The breaker with alarm output contact is not available.
- *7 Not isolation compatible.
- *8 In the case of breaker mounting, the terminal cover is special type for MDU breaker.

Remarks: 1.

| Rated operational voltage | Applicable circuit voltage | Available voltage range |
|---|---|---|
| 100-440V | 100/110/200/220/240/254/265/380/400/415/440V | 80-484V |
| 200-440V | 200/220/240/254/265/380/400/415/440V | 160-484V |

# Measuring Display Unit Breakers (Circuit Breakers with Measuring Display Unit)

## ●Three major features of Mitsubishi Measuring Display Unit Breakers

1. Saving of space and labor for installation
2. Improved and diversified functions
3. Provision of total cost advantages

Mitsubishi Measuring Display Unit Breakers with built-in VT and CT and Measuring Display Unit realize measurement, display and transmission of electric circuit information in small space with less installation and wiring work and provide total cost advantages.
The Measuring Display Unit Breakers full of functions in small bodies are suitable for monitoring and protection of electric circuits and maintenance of equipment. A wide variety of models applicable to various networks supports the customers' energy saving activities through detailed energy control as energy saving supporting devices.

## ●Simply realizing measurement and monitoring of electric circuits for supporting various types of energy saving control

The circuit breakers measure and display the load current, line voltage, electric power, electric energy, harmonic current, leak current and power factor to realize detailed energy control. They support customers' energy saving control.

### WS-V Series Measuring Display Unit Breakers

| Applicable models |
|---|
| NF250-SEV with MDU, NF250-HEV with MDU |

●The measuring display unit can be installed on the body or panel.

【Examples of installation of measuring display unit】

| Breaker mounting | Panel mounting |
|---|---|
| | 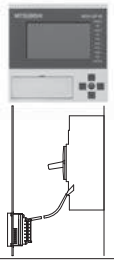 |

Note: The size of holes in the face board of the circuit breaker body varies depending on whether the measuring display unit is installed on the body or the panel.

◆Model list

| Model type | Type name |
|---|---|
| CC-Link communication | MDU-DP-C |
| Electric energy pulse output | MDU-DP-P |
| No transmission | MDU-DP-N |

◆Measuring Display Unit cable list

| Type name | Cable length |
|---|---|
| MDU-DP-CB-2M | 2m |
| MDU-DP-CB-3M | 3m |
| MDU-DP-CB-5M | 5m |
| MDU-DP-CB-10M | 10m |

### W & WS Series Measuring Display Unit Breakers

| Applicable models |
|---|
| NF400-SEP with MDU, NF400-HEP with MDU, NF630-SEP with MDU, NF630-HEP with MDU, NF800-SEP with MDU, NF800-HEP with MDU |

●The measuring display unit can be installed on the body or panel.

【Examples of installation of measuring display unit】

| Breaker mounting | Panel mounting |
|---|---|
| | 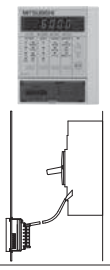 |

◆Model list

| Model type | Type name | Remarks |
|---|---|---|
| CC-Link communication | MDU-AC ○○○ | • The model names do not include ○○○. |
| Electric energy pulse output | MDU-AP ○○○ | • When installing the Measuring Display Unit on the body, specify the A frame type in ○○○. For example, when the circuit breaker NF400-SEP with MDU and the Measuring Display Unit with CC-Link communication are combined, the model name is MDU-AC400. If 630A frame or 800A frame is used, specify 630 or 800 in ○○○. |
| No transmission | MDU-AN ○○○ | • When installing the Measuring Display Unit on the panel, specify the cable length (0.5 m, 2 m, 3 m, 5 m or 10 m) in ○○○. For example, when the Measuring Display Unit with CC-Link communication is installed on the panel with a 3-m cable, the model name is MDU-AC-PANEL 3M. |

## ●Specifications for Measuring Display Unit (1)

The measurement and display items vary depending on the model or frame A.
(For the measurement accuracy, please refer to page 39.)

| Applicable models |
|---|
| NF250-SEV with MDU, NF250-HEV with MDU |

**Table 2-1**

| Measurement and memory items (accuracy) (*1) (*2) / Model | | | Display | Storage (*3) | With CC-Link communication: Communication | Remarks |
|---|---|---|---|---|---|---|
| Load current (±1.0%) | Present value | Each phase | ● | – | ● | |
| | | General (average value) (*5) | ● | – | ● | |
| | | Phase with max. value | – | – | ● | |
| | Present value of demand (*4) | Each phase | ● | – | ● | |
| | | Phase with max. value | ● | – | ● | |
| | Max. demand value among all phases | | ● | ● | ● | |
| | Time of occurrence of max. demand value among all phases | | ● | ● | ● | |
| Line voltage (±1.0%) | Present value | Between each lines | ● | – | ● | |
| | | General (average value) (*5) | ● | – | ● | |
| | Max. value among all lines | | ● | ● | ● | |
| | Time of occurrence of max. value among all lines | | ● | ● | ● | |
| Harmonic current (±2.5%) | Present value | Fundamental wave of each phase | ● | – | ● | |
| | | Each order of each phase | ● | – | ● | |
| | | General of each phase (*6) | ● | – | ● | |
| | Max. value of fundamental wave among all phases | | ● | ● | ● | |
| | Time of occurrence of max. value of fundamental wave among all phases | | ● | ● | – | |
| | Max. value in each order of each phase | | ● | ● | ● | |
| | Time of occurrence of max. value in each order of each phase | | ● | ● | ● | |
| | Demand value (*4) | General of each phase (*6) | ● | – | ● | |
| | | General max. value among all phases | ● | ● | ● | |
| | | Time of occurrence of general max. value among all phases | ● | ● | ● | |
| | General distortion factor of each phase | | ● | – | – | |
| | Content in each order of each phase | | ● | – | – | |
| Electric power (±1.5%) | Present value | | ● | – | ● | |
| | Demand value (*4) | Present value | ● | – | ● | |
| | | Max. value | ● | ● | ● | |
| | | Time of occurrence of max. value | ● | ● | ● | |
| Reactive power (±2.5%) | Present value | | ● | – | ● | |
| | Demand value (*4) | Present value | ● | – | ● | |
| | | Max. value | ● | ● | ● | |
| | | Time of occurrence of max. value | ● | ● | ● | |
| Electric energy (±2.0%) (*7) | Integrated value | | ● | ● | ● | Value accumulated from previous reset to present |
| | Amount for last 1 hour | | ● | – | ● | |
| | Max. value of amount for 1 hour | | ● | ● | ● | |
| | Time of occurrence of max. value of amount for 1 hour | | ● | ● | ● | |
| Reactive energy (±3.0%) (*7) | Integrated value | | ● | ● | ● | Value accumulated from previous reset to present |
| | Amount for last 1 hour | | ● | – | ● | |
| | Max. value of amount for 1 hour | | ● | ● | ● | |
| | Time of occurrence of max. value of amount for 1 hour | | ● | ● | ● | |
| Leakage current (±2.5%) (*8) (*9) | Present value | | ● | – | ● | |
| | Demand value (*4) | Present value | ● | – | ● | |
| | | Max. value | ● | ● | ● | |
| | | Time of occurrence of max. value | ● | ● | ● | |
| Leakage current containing harmonics (±2.5%) (*9) | Present value | | ● | – | ● | |
| | Demand value (*4) | Present value | ● | – | ● | |
| | | Max. value | ● | ● | ● | |
| | | Time of occurrence of max. value | ● | ● | ● | |
| Cause of fault (*10) | Fault current (accuracy: ±15%) (*11) | | ● | ● | ● | Information on fault after previous reset or last fault, and cause of fault (continuously monitored) |
| | Cause of fault | | ● | ● | ● | |
| Power factor (±5.0%) | Present value | | ● | – | ● | |
| | Max. value | | ● | ● | ● | |
| | Time of occurrence of max. value | | ● | ● | – | |
| Frequency (±2.5%) | Present value | | ● | – | ● | |
| Alarm of circuit breaker (*12) | PAL, OVER, EPAL, ECA, IDM_AL, ILA_AL, IUB_AL, Neutral line open phase alarm | | ● | – | ● | The neutral line open phase alarm is given only on the display. |
| State of circuit breaker | Tripping state of circuit breaker (AL) | | – | – | ● | On installation of alarm switch for transmission with Measuring Display Unit (option) |
| | ON/OFF state of circuit breaker (AX) | | – | – | ● | On installation of auxiliary switch for transmission with Measuring Display Unit (option) |
| | Number of times of tripping of circuit breaker | | – | ● | ● | On installation of alarm switch for transmission with Measuring Display Unit (option) |
| | Number of times of opening and closing of circuit breaker | | – | ● | ● | On installation of auxiliary switch for transmission with Measuring Display Unit (option) |
| Default settings | Time setting | | ● | ● | ● | Initial setting and resetting after power failure are necessary (no power failure compensation) |
| | Demand time limit setting (*4) | | ● | ● | ● | By default, the demand time limit is 2 min.<br>It can be set in the range from 0 to 15 min in 1-min steps. |
| | EPAL sensitivity current setting | | ● | ● | ● | By default, the function is off.<br>The parameters can be set in the following ranges.<br>Function: ON/OFF<br>Sensitivity current: 5, 10, 15, 20 to 100 mA (10-mA step), 100 to 1000 mA (100-mA step)<br>Operating time: 0.1 to 1.0 (0.1-sec step), 1.0 to 10.0 (1-sec step) |
| | IDM_AL (current demand alarm) | | ● | ● | ● | By default, the function is off.<br>The parameters can be set in the following ranges.<br>Function: ON/OFF<br>Pickup current: 50 to 100% (1% step)<br>Demand time limit: 1 to 10 min (1-min step), 15, 20, 25 and 30 min |
| | ILA_AL (current open phase alarm) | | ● | ● | ● | By default, the function is off.<br>The parameters can be set in the following ranges.<br>Function: ON/OFF<br>Pickup current: 10%, fixed (no setting)<br>Operating time: 30 sec (no setting) |
| | IUB_AL (unbalanced current alarm) | | ● | ● | ● | By default, the function is off.<br>The parameters can be set in the following ranges.<br>Function: ON/OFF<br>Pickup current: 30%, fixed (no setting)<br>Operating time: 30 sec (no setting) |
| | Neutral line open phase alarm | | ● | ● | ● | 30 When the single-phase 3-wire type is set, the function is turned on.<br>Rated operating overvoltage: 135 V AC (no setting)<br>Operating time: 1 sec (no setting) |
| | Phase switching setting | | ● | ● | ● | Default: No phase switching |
| | Alarm retention (self-retention or automatic reset) setting | | ● | ● | ● | Default: Automatic reset |
| | Phase and wire type | | ● | ● | ● | Default: 3-phase 3-wire |
| | Electric energy arbitrary setting | | ● | ● | ● | |
| | Reactive energy arbitrary setting | | ● | ● | ● | |
| | Display direction | | ● | ● | ● | Default: Vertical One of vertical, horizontal 1 and horizontal 2 can be selected. |

Notes: *1 The term "each phase" used for load current and harmonic current refers to phase 1, 2, 3 or N. However, the phase N is provided only on 4-pole circuit breakers.
The term "between each phase" used for line voltage refers to between phases 1 and 2, 2 and 3, 3 and 1, 1 and N, 2 and N or 3 and N. However, voltage between phases 1 and N, 2 and N and 3 and N is applicable only on 4-pole circuit breakers.
These circuit breakers measure the values every 0.25 sec. Therefore, even when a low order circuit breaker operates, operating current may not be measured.
*2 Each maximum value is the largest value among values obtained from the start of operation (after the previous reset) to the present.
*3 The integrated value of electric energy and the integrated value of reactive energy are stored upon occurrence of power failure and every 30 minutes, the fault current and the cause are stored upon occurrence of fault, the set values are stored when they are set, and other values are stored every 30 minutes in the nonvolatile E²PROM.
*4 The demand time limit cannot be set individually. It is common to the items.
*5 The average values of load current and line voltage are calculated as shown below when the phase and wire type is specified.

| Phase and wire type | Average present value of current | Average present value of voltage |
|---|---|---|
| Single-phase 2-wire | Average present value of current = phase 3 current | Average present value of voltage = voltage between phases 2 and |
| Single-phase 3-wire | Average present value of current = (phase 1 current + phase 3 current)/2 | Average present value of voltage = (voltage between phases 1 and 2 + voltage between phases 2 and 3)/2 |
| 3-phase 3-wire<br>3-phase 4-wire | Average present value of current = (phase 1 current + phase 2 current + phase 3 current)/3 | Average present value of voltage = (voltage between phases 1 and 2 + voltage between phases 2 and 3 + voltage between phases 3 and 1 phases)/3 |

*6 Sum of values of harmonic components in third to 19th orders except fundamental wave component
*7 The reverse power is not measured.
*8 When leakage current does not contain harmonics, the leakage current value is measured after removing the harmonic components with a digital filter having the same cutoff frequency as the earth leakage circuit breaker applicable to harmonics and surge.
*9 When a motor is used as a load, the maximum demand value of leakage current may be affected by the motor starting current.
*10 If the upper limit of the fault current measurement range (rated current 125 to 250 A (adjustable): 4000 A, rated current 50, 60, 75, 100, 125 A (fixed): 2000 A)) is exceeded when overload or short circuit fault occurs, the cause of the fault may not be displayed, and the fault current may not be measured. For fault current, display of cause of fault and measurement of fault current are enabled when the AL for transmission with the Measuring Display Unit (option) is installed.
*11 The leakage fault current value is the value calculated without harmonics.
*12 When the alarm retention mode has been set to Automatic reset, the alarm display on the Measuring Display Unit will be reset automatically. When the alarm retention mode is Self-retention, the alarm display will be self-retained. In the self-retention mode, the display can be reset through the alarm reset operation (collective reset). OVER will be automatically reset regardless of the mode setting.

## ●Specifications for Measuring Display Unit (1)

The measurement and display items vary depending on the model or frame A.
(For the measurement accuracy, please refer to page 40.)

| Applicable models |
|---|
| NF400-SEP with MDU, NF400-HEP with MDU, NF630-SEP with MDU, NF630-HEP with MDU, NF800-SEP with MDU, NF800-HEP with MDU |

**Table 2-2**

| Measurement and memory items (accuracy) (*3) | | MDU Display | Storage (*1) | Electric energy with pulse output: Pulse output (*1) | With CC-Link communication: Communication | Remarks |
|---|---|---|---|---|---|---|
| Load current (±2.5%) | Present value of each phase | ● | – | – | ● | Time limit: 0 to 15 min, changeable (Same as the present value when 0 min is specified) |
| | Demand value of each phase | ● | – | – | ● | |
| | Average present value (*11) | ● | – | – | ● | |
| | Max. demand value (general value) (*4) | ● | ● | – | ● | Max. demand value after previous reset |
| | Time of occurrence of max. value (year, month, day, hour, minute) | – | ● | – | ● | |
| Line voltage (±2.5%) | Present value between each phases | ● | – | – | ● | |
| | Average present value (*11) | ● | – | – | ● | |
| | Max. value (general value) (*4) | ● | ● | – | ● | Max. value after previous reset (not demand value) |
| | Time of occurrence of max. value (year, month, day, hour, minute) | – | ● | – | ● | |
| Harmonic current (±2.5%) | Current value in 3rd, 5th, 7th ... 19th orders of each phase | ● | – | – | ● | |
| | Max. value in 3rd, 5th, 7th ... 19th orders (general value) (*4) | ● | ● | – | ● | Max. value after previous reset (not demand value) |
| | Time of occurrence of max. value (year, month, day, hour, minute) | – | ● | – | ● | |
| | Current value of general harmonics of each phase (*10) | ● | – | – | ● | Time limit: 0 to 15 min, changeable (Same as the present value when 0 min is specified) |
| | Demand value of general harmonics of each phase (*10) | ● | – | – | ● | |
| | Max. demand value (general value) (*4) | ● | ● | – | ● | Max. demand value after previous reset |
| | Time of occurrence of max. value (year, month, day, hour, minute) | – | ● | – | ● | |
| Electric power (±2.5%) | Current value (also reverse power is measured) | ● | – | – | ● | Time limit: 0 to 15 min, changeable (Same as the present value when 0 min is specified) |
| | Demand value (also reverse power is measured) | ● | – | – | ● | |
| | Max. demand value | ● | ● | – | ● | Max. demand value after previous reset |
| | Time of occurrence of max. value (year, month, day, hour, minute) | – | ● | – | ● | |
| Electric energy (±2.5%) | Electric energy (integrated value) (*5) | ● | ● | ● | ● | Value accumulated from previous reset to present |
| | Electric energy per time (*5) | ● | – | – | ● | Amount for 1 hour from hour to hour on built-in clock |
| | Max. value of electric energy per time (*5) | ● | ● | – | ● | Max. demand value after previous reset |
| | Time of occurrence of max. value (year, month, day, hour, minute) | – | ● | – | ● | |
| Cause of fault | Fault current (accuracy: ±15%) (*11) | ● | ● | – | ● | Information on fault after previous reset or last fault, and cause of fault (continuously monitored) |
| | | ● | ● | – | ● | |
| Power factor (±5%) | Present value | ● | – | – | ● | |
| Alarm of circuit breaker | PAL, OVER, EPAL, ECA (*6) (*11) | ● LED on | – | – | ● | |
| State of circuit breaker | Tripping state of circuit breaker (AL) | – | – | – | ● | When alarm switch for transmission with Measuring Display Unit (option) is installed |
| | ON/OFF state of circuit breaker (AX) | – | – | – | ● | When auxiliary switch for transmission with Measuring Display Unit (option) is installed |
| Default settings | Time setting | – | – | – | ● | Initial setting and resetting after power failure are necessary (no power failure compensation). |
| | Demand time limit setting (*7) | ● | ● | – | ● | Default: 2 min<br>Setting in 1-min steps in range from 0 to 15 min |
| | EPAL sensitivity current setting | ● | ● | – | ● | Default: 0 mA<br>Setting in 10-mA steps in range from 0 to 250 mA<br>At 0 mA, EPAL is ineffective. |
| | PAL pickup current setting<br>* Setting on circuit breaker body The Measuring Display Unit does not have the setting function. | ● | ● | – | ● | Default: 100%<br>Setting in 5% steps in range from 70 to 100%<br>Default setting on breaker body is 70% unless otherwise specified. |
| | Pulse unit setting | ● | ● | – | – | Default: 1 kWh/pulse<br>Setting to 1 kWh, 10 kWh, 100 kWh, 1000 kWh or 10000 kWh |
| | Phase switching setting | ● | ● | – | ● | Default: No phase switching |
| | Alarm retention (self-retention or automatic reset) setting | ● | ● | – | ● | Default: Automatic reset |

Notes:
*1 The electric energy (integrated value) is stored upon occurrence of power failure and every 2 hours, the fault current and the cause are stored upon occurrence of fault, the demand time limit, EPAL sensitivity current, PAL pickup current, pulse unit, alarm retention and phase switching settings are stored when they are set, and other values are stored every 2 hours in the nonvolatile $E^2$PROM.
Each maximum value is the largest value among values obtained from the start of operation (after the previous reset) to the present.
*2 Every time the electric energy is integrated in the pulse unit (the unit can be set to 1 kWh, 10 kWh, 100 kWh, 1000 kWh or 10000 kWh), a pulse is output. Counting can be performed with a PLC.
*3 The term "each phase" used for load current and harmonic current refers to phase 1, 2, 3 or N. However, the phase N is provided only on 4-pole circuit breakers.
The term "between each phase" used for line voltage refers to between phases 1 and 2, 2 and 3, 3 and 1, 1 and N, 2 and N or 3 and N. However, voltage between phases 1 and N, 2 and N and 3 and N is applicable only on 4-pole circuit breakers.
The electric energy data is 6-digit data of up to 999999 kWh. The voltage and harmonic current are 3-digit data, and others are 4-digit.
These circuit breakers measure the values every 0.25 sec. Therefore, even when a low order circuit breaker operates, operating current may not be measured.
*4 Each general value indicates the value only of the phase with the maximum value.
*5 The electric energy is not measured in the case of reverse power flow.
*6 When the alarm retention mode has been set to Automatic reset, the PAL, EPAL, ECA alarm LED display on the Measuring Display Unit front panel will be reset automatically. When the alarm retention mode is Self-retention, the alarm display will be self-retained. In the self-retention mode, the display can be reset through alarm reset operation (collective reset). OVER will be automatically reset regardless of the mode setting.
*7 The demand time limit cannot be set individually. It is common to the items.
*8 Sum of values of harmonic components in third to 19th orders except fundamental wave component.
*9 The average present value of load current is the average value of current among phases 1, 2 and 3 (the current of the phase N is not included even in the case of a 4-pole circuit breaker). When the circuit breaker is used on a single-phase 3-wire circuit, the calculated value is displayed. However, ignore it. The average present value of line voltage is the average value of voltages between phases 1 and 2, 2 and 3 and 3 and 1 (the voltages between phases 1 and N, 2 and N and 3 and N are not included in the case of a 4-pole circuit breaker).
*10 Setting at the pre-alarm current Ip (which can be set in the range from 70 to 100% of the rated current In in 5% steps) on the circuit breaker body. The Measuring Display Unit does not have the setting function.
*11 The operating time of PAL and EPAL is shown below.

| | |
|---|---|
| PAL | Same as pre-alarm operating time Tp on circuit breaker body |
| EPAL | 3s (fixed) |

## ●Specifications for Measuring Display Unit (2)

| Applicable models |
|---|
| NF250-SEV with MDU, NF250-HEV with MDU |

### Table 2-3

| Item | | Specification |
|---|---|---|
| Data updating cycle | | 250 ms (harmonic current: 2 s) |
| Tolerances | | Current and voltage: ±1.0% (to rating input)<br>Electric power: ±1.5% (to rating input)<br>Reactive power: ±2.5% (to rating input)<br>Harmonic current: ±2.5% (to rating input)<br>Power factor: ±5%<br>Frequency: ±2.5%<br>Electric energy: ±2.0% (voltage 100 V to 440 V, range from 5 to 100% of current rating, power factor 1)<br>Reactive energy: ±3.0% (voltage 100 V to 440 V, range from 10 to 100% of current rating, power factor 0)<br>Leakage current: ±2.5% (to rating input) (*1)<br>Fault current: ±15% (*2) |
| Demand time limit setting range | | 0 to 15 min (1-min steps) |
| Rated input | Voltage circuit (1$\phi$2W, 3$\phi$3W) | 440 V (only 4-pole breakers applicable to 3$\phi$4W) |
| | Voltage circuit (1$\phi$3W) | |
| | Voltage circuit (3$\phi$4W) | |
| | Current circuit | Load current/harmonic current: 125 A/250 A (Automatic discrimination. Determined based on A frame of circuit breaker. 125 A when rated current of 250 A frame is 125 A or less) Leakage current: 500 mA |
| | Frequency | 50 Hz/60 Hz (automatic discrimination of frequency) |
| Power failure compensation | (1) Wh (integrated value)<br>(2) Max. value<br>(3) Setting data | Stored in EEPROM (nonvolatile memory)<br>* Wh and varh are stored upon occurrence of power failure and every 30 min.<br>Max. value is stored every 30 min. Setting data are stored when they are set. |
| | Clock | No power failure compensation |
| Clock accuracy | | Approx. 1 min/month |
| External dimensions (unit: mm) | | See Characteristics and Dimensions. |
| Control power supply | | Compatible with 100 to 240 V AC/DC, 50/60 Hz (allowable voltage range: 85% to 110%), 12 VA |
| Other functions | | Function for switching phases to be measured to 1-3 and 3-1<br>ECA/PAL alarm, self-retention/automatic reset setting function<br>Function for counting number of times of opening and closing of circuit breaker body (*3) |

Notes: *1 It is measured on earth leakage circuit breakers.
*2 The measurement of fault current of load is enabled when the AL switch for transmission with Measuring Display Unit (option) is installed in the Measuring Display Unit Breaker body.
*3 The function is enabled when the AX switch for transmission with Measuring Display Unit (option) is installed in the Measuring Display Unit Breaker body.

## ●Network Specifications for Measuring Display Unit

### [Electric energy pulse output]

### Table 2-4

| Item | Specification |
|---|---|
| Output elements | Solid state relay (SSR), no voltage a contact (Ca and Cb terminals: no polarity) |
| Contact capacity | Compatible with 24V DC and 100 to 200 V AC, 20 mA |
| Output pulse unit | 1, 10, 100, 1000 and 10000 kWh/pulse (settable) |
| Output pulse width | 0.35 to 0.45 s |
| Max. wiring length | 100m |

### [CC-Link communication]

### Table 2-5

| Item | Specification |
|---|---|
| Communication speed | 10M/5M/2.5M/625k/156kbps |
| Communication method | Broadcast polling method |
| Synchronization method | Frame synchronization method |
| Encoding method | NRZI |
| Transmission format | Conforming to HDLC |
| Number of occupied stations | Remote device occupying 1 station |
| Number of connected units | Meet the following conditions.<br>When a system consists only of Measuring Display Units, up to 42 units can be connected.<br>Condition 1 for number of connected units<br>$\{(1\times a) + (2\times b) + (3\times c) + (4\times d)\} \leqq 64$<br>a: Number of units occupying 1 station<br>b: Number of units occupying 2 stations<br>c: Number of units occupying 3 stations<br>d: Number of units occupying 4 stations<br>Condition 2 for number of connected units<br>$\{(16\times A) + (54\times B) + (88\times C)\} \leqq 2304$<br>A: Number of units at 1 remote I/O station ≦ 64<br>B: Number of units at remote device station ≦ 42<br>C: Number of units at local station ≦ 26 |
| Station number | Setting in range from 1 to 64 (Set the station number without fail.) |
| CC-Link version | CC-Link Ver.1.10 |
| Max. total extension cable length and cable length between stations | 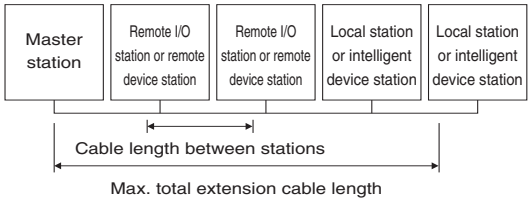 <br>Cables applicable to CC-Link Ver. 1.10 (with use of 110-ohm terminal resistance)<br>Communication speed: 156kbps / 625kbps / 2.5Mbps / 5Mbps / 10Mbps<br>Cable length between stations: 0.2 m or more<br>Max. total extension cable length: 1200m / 900m / 400m / 160m / 100m |
| Connecting cable | Cables applicable to CC-Link Ver. 1.10 (shielded 3-core twisted pair cables)<br>* Cables applicable to Ver. 1.10 supplied by different manufacturers can be used simultaneously. |

Note: For more information, visit the website of CC-Link Partner Association (HYPERLINK "http://www.cc-Link.org/").

## ●Specifications for Measuring Display Unit (2)

| Applicable models |
|---|
| NF400-SEP with MDU, NF400-HEP with MDU, NF630-SEP with MDU, NF630-HEP with MDU, NF800-SEP with MDU, NF800-HEP with MDU |

**Table 2-6**

| Item | | Specification |
|---|---|---|
| Data updating cycle | | 250 ms (harmonic current: 2 s) |
| Tolerances | | Current, voltage and Electric power: ±2.5% (to rating input)<br>Power factor: ±5%<br>Electric energy: ±2.5% (voltage 100 V to 440 V, range from 5 to 100% of current rating, power factor 1)<br>Fault current: ±15% |
| Demand time limit setting range | | 0 to 15 min (1-min steps) |
| Rated input | Voltage circuit (1ϕ2W, 3ϕ3W) | 440 V (only 4-pole breakers applicable to 3ϕ4W) |
| | Voltage circuit (1ϕ3W) | |
| | Voltage circuit (3ϕ4W) | |
| | Current circuit | Load current/harmonic current: 100 A/225 A/400 A/600 A/800 A (Automatic discrimination. Determined based on A frame of circuit breaker. 100 A when rated current of 225 A frame is 100 A or less) Leakage current: 500 mA |
| | Frequency | 50 Hz/60 Hz (automatic discrimination of frequency) |
| Power failure compensation | (1) Wh (integrated value)<br>(2) Max. value<br>(3) Setting data | Stored in EEPROM (nonvolatile memory)<br>* Wh is stored upon occurrence of power failure and every 2 hours<br>The max. value is stored every 2 hours. The setting data is stored when it is set. |
| | Clock | No power failure compensation |
| Clock accuracy | | Approx. 1 min/month |
| External dimensions (unit: mm) | | W×D×H: 90×75×30 |
| Control power supply | | Compatible with 100 to 240 V AC/DC, 50/60 Hz (allowable voltage range: 85% to 110%), 12 VA |
| Other functions | | Function for switching phases to be measured to 1-3 and 3-1<br>ECA/PAL alarm, self-retention/automatic reset setting function |

## ●Network Specifications for Measuring Display Unit

### [Electric energy pulse output]

**Table 2-7**

| Item | Specification |
|---|---|
| Output elements | Solid state relay (SSR), no voltage a contact (Ca and Cb terminals: no polarity) |
| Contact capacity | Compatible with 24V DC and 100 to 200 V AC, 20 mA |
| Output pulse unit | 1, 10, 100, 1000 and 10000 kWh/pulse (settable) |
| Output pulse width | 0.35 to 0.45 s |
| Max. wiring length | 100m |

### [CC-Link communication]

**Table 2-8**

| Item | Specification |
|---|---|
| Communication speed | 10M/5M/2.5M/625k/156kbps |
| Communication method | Broadcast polling method |
| Synchronization method | Frame synchronization method |
| Encoding method | NRZI |
| Transmission format | Conforming to HDLC |
| Number of occupied stations | Remote device occupying 1 station |
| Number of connected units | Meet the following conditions.<br>When a system consists only of Measuring Display Units, up to 42 units can be connected.<br>Condition 1 for number of connected units<br>{ (1×a) + (2×b) + (3×c) + (4×d) } ≦ 64<br>a: Number of units occupying 1 station<br>b: Number of units occupying 2 stations<br>c: Number of units occupying 3 stations<br>d: Number of units occupying 4 stations<br>Condition 2 for number of connected units<br>{ (16×A) + (54×B) + (88×C) } ≦ 2304<br>A: Number of units at 1 remote I/O station ≦ 64<br>B: Number of units at remote device station ≦ 42<br>C: Number of units at local station ≦ 26 |
| Station number | Setting in range from 1 to 64 (Set the station number without fail.) |
| CC-Link version | Installation of Measuring Display Unit on body: CC-Link Ver. 1.10<br>Installation of Measuring Display Unit on panel: CC-Link Ver. 1.00 |
| Max. total extension cable length and cable length between stations | 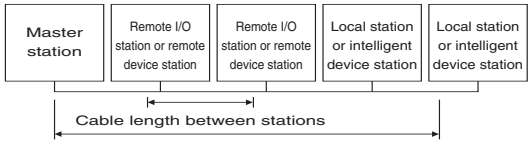 <br>Cables applicable to CC-Link Ver. 1.10 (with use of 110-ohm terminal resistance)<br>Communication speed: 156kbps / 625kbps / 2.5Mbps / 5Mbps / 10Mbps<br>Cable length between stations: 0.2 m or more<br>Max. total extension cable length: 1200m / 900m / 400m / 160m / 100m<br>Cables applicable to CC-Link Ver. 1.00<br>Communication speed: 156kbps / 625kbps / 2.5Mbps / 5Mbps / 10Mbps<br>Cable length between stations: Between master or local station or intelligent device station and station on downstream or upstream side: 1 m or more; Between remote I/O stations and remote device stations: 0.3 m or more<br>Max. total extension cable length: 1200m / 600m / 200m / 150m / 100m<br>When the Measuring Display Unit is installed on the panel, the terminal block on the panel mounting plate and the terminal block on the Measuring Display Unit are connected with a CC-Link cable having a one-way length of 15 cm and an entire length of 30 cm. When connecting the unit in consideration of the following three points.<br>(1) The one-way length of the CC-Link cable, 15 cm, is included in the distance between stations.<br>(2) The entire length of the CC-Link cable, 30 cm, is included in the maximum transmission distance (total extension distance).<br>(3) Use CC-Link cables of the same type as the connecting cable (cable FANC-SB made by Kuramo Electric Co., Ltd.). When using CC-Link cables other than FANC-SB, replace the cable between the front panel of the Measuring Display Unit and the terminal block at the rear with the same cable.<br>When the Measuring Display Unit is installed on the panel, CC-Link cable of CC-Link Ver.1.00 (FANC-SB made by Kuramo Electric Co., Ltd.) is used between the Measuring Display Unit front panel and the terminal block at the rear. Replace this CC-Link cable with a cable applicable to CC-Link Ver. 1.10 to configure the entire system with cables applicable to CC-Link Ver. 1.10, and the conditions for the cable length between stations can be simplified. |
| Connecting cable | Cables applicable to CC-Link Ver. 1.10 (shielded 3-core twisted pair cables)<br>* Cables applicable to Ver. 1.10 supplied by different manufacturers can be used simultaneously.<br>* When the Measuring Display Unit is installed on the panel, use FANC-SB (CC-Link Ver. 1.00) made by Kuramo Electric Co., Ltd. |

Note: For more information, visit the website of CC-Link Partner Association (HYPERLINK "http://www.cc-Link.org/").

## ●Cautions when Using Measuring Display Unit Breakers (common instructions)

### Measuring accuracy

(1) The accuracy of measurement of current or voltage is indicated as the percentage of error to the rated current or voltage for measurement by the Measuring Display Unit.
The measurement rated current is the maximum rated current of each ampere frame. For W & WS Series Measuring Display Unit Breakers, the accuracy is the max. rated current × ±2.5%. For WS-V Series Measuring Display Unit Breakers, the accuracy is the max. rated current × ±1%.
(For example, when the rated current of NF630-SEP with Measuring Display Unit is 350 A, the measurement rated current is 630 A, and the current accuracy is 630 A × ±2.5% = ±15 A.)
However, the measurement rated current of the following breakers is determined as follows.

<WS-V Measuring Display Unit Breakers>
◆Rated current 50 A, 60 A, 75 A, 100 A, 125 A: Measurement rated current 125 A
◆Rated current 125 to 250 A: Measurement rated current 250 A
* The measurement rated voltage is 440 V. (Common to all A frames)
When the current is less than 1.0% of the measurement rated current in the case of WS-V Series Measuring Display Unit Breakers or less than 2.0% of the measurement rated current in the case of W & WS Series Measuring Display Unit Breakers or when the voltage is less than 5.0% of the measurement rated voltage in the case of WS-V Series Measuring Display Unit Breakers or less than 2.0% of the measurement rated current in the case of W & WS Series Measuring Display Unit Breakers, the current or voltage is cut off, and zero is displayed.

(2) When the current is cut off, the current is displayed as 0 A. However, if the current is 0.4% or more of the measurement rated current, the electric energy is measured.
(3) The accuracy of power factor is the percentage to electrical angle of 90°. A power factor of 50% or less is displayed as a reference value.
(4) The accuracy of electric energy is ±2.0% of the true value in the case of WS-V Series Measuring Display Unit Breakers and ±2.5% of the true value in the case of W & WS Series Measuring Display Unit Breakers in the range of measurement rated voltage (100 V to 440 V) × current (measurement rated current of 5 to 100%).
(5) The accuracy of leakage current is ±2.5% of the measurement rated current of 500 mA.

### How to use Measuring Display Unit Breaker on single-phase 2-wire circuity

(1) Connect the breaker as shown in the right figure.
The phase 1 on the load side is charged. Insulate it.
As measurement data, use the current of the phases 2 and 3 and the voltage between the phases 2 and 3.
Although the current of the phase 1 and the voltage between the phases 1 and 2 and the phases 3 and 1 are measured, ignore the measurements. The Measuring Display Unit is designed for 3-phase 3-wire and single-phase and 3-wire circuits.
On W & WS Series Measuring Display Unit Breakers, the average values of load current and line voltage are calculated from the values of the phases 1, 2 and 3 (between the phases). Ignore these measurement values.
Also when the breaker is used on a single-phase 3-wire circuit, ignore these values.
When using any WS-V Series Measuring Display Unit Breaker, set the phase and wire type.

**Connection on single-phase 2-wire circuit**

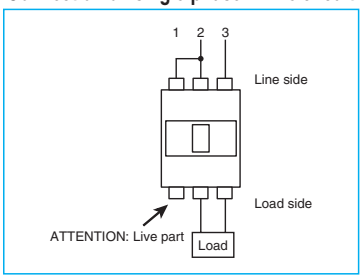


### Phase sequence of Measuring Display Unit Breaker

The phase sequence of Measuring Display Unit Breaker can be set by using the phase switching function as shown below.
When the breaker is installed vertically with the power supply side upward (see the right figure), the phase sequence is set as stated below.
No phase switching: 1, 2, 3 and N from the left (default)
With phase switching: 3, 2, 1, and N from the left
Set the phase sequence in accordance with the installation and wiring methods.
Notes (1) The phase N is provided only on 4-pole circuit breakers.
(2) Note that the position of the phase N is unchanged regardless of the phase switching setting.

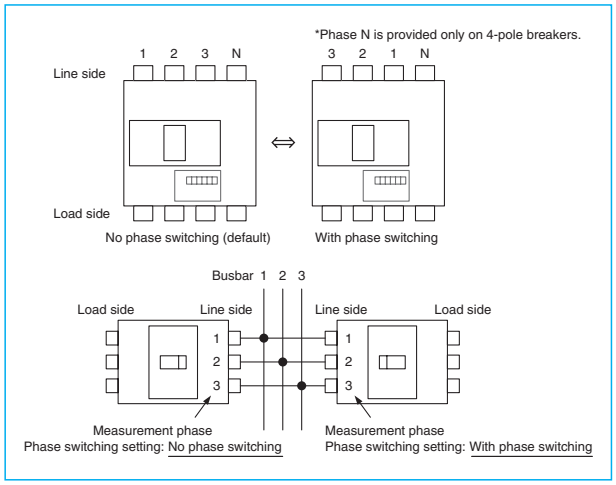


### Reverse connection of Measuring Display Unit Breaker

The Measuring Display Unit Breakers cannot be connected with the power supply and load sides set reversely.

### Installation of Measuring Display Unit Breaker in close contact

The Measuring Display Unit Breakers must not be installed in close contact.
(1) In the case of 400, 630 or 800A frame, install the breaker body securing a wiring space of 30 mm or more on the right side of the breaker to connect the connecting cables and fitting the connecting cable connectors.
(2) In the case of WS-V Series Measuring display Unit Breaker, install the breaker body securing a wiring space of 30 mm or more on the right side of the breaker to connect the connecting cables.

## ●Cautions when using Measuring Display Unit Breaker (For Measuring Display Unit)

### Transmission method

(1) One of No transmission, With pulse output and With CC-Link communication should be specified.
(2) W & WS Series Measuring Display Unit Breaker with CC-Link communication cannot be manufactured for installing the Measuring Display Unit on the breaker body.
(3) When With transmission is selected, data which can be transmitted depends on the function of the Measuring Display Unit Breaker body. The transmission options cannot be installed or changed later. Specify the options when issuing the initial order.
(4) For the maximum number of connected units and transmission distance for each transmission type, see the following tables.
<WS-V Measuring Display Unit Breakers>
Tables 2-4 and 2-5
<W & WS Measuring Display Unit Breakers>
Tables 2-7 and 2-8

### Installation of Measuring Display Unit

(1) When the installation of Measuring Display Unit on panel has been specified, the breaker will come with the panel mounting parts, mounting screws and 2-m connecting cable (standard).
(The 0.5-, 3-, 5- or 10-m connecting cable can be specified.)
(2) If the installation position of the Measuring Display Unit of a 4P breaker is changed from the panel to the body or vice versa, the Measuring Display Unit and the breaker body must be returned to the manufacturer for modification.

### Measuring Display Unit Breaker with CC-Link communication (W & WS Series Measuring Display Unit Breakers)

(1) If you intend to use the circuit breaker with its pane out on the face board, specify the installation on panel.

## ●Change of display direction for breaker mounting

<WS-V Series Measuring Display Unit Breaker>
(1) When installing the Measuring Display Unit on the breaker body installed in the horizontal direction, the direction of the display can be changed according to the installation direction.
(2) The display direction is set on the display unit.

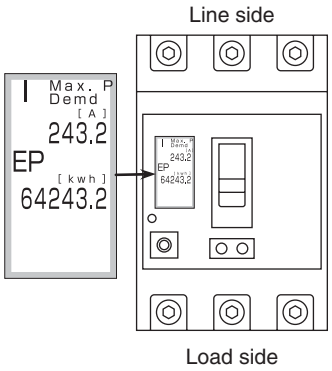


Default display direction

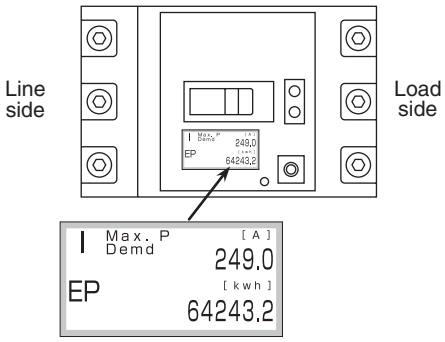


Installation with line side on left

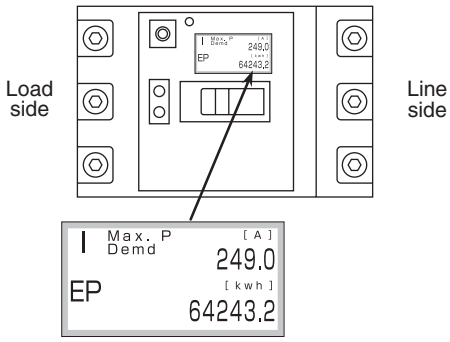


Installation with line side on right

<W & WS Series Measuring Display Unit Breaker>
(1) When installing the Measuring Display Unit on the breaker body installed in the horizontal direction, the direction of the display of Measuring Display Unit can be changed for ease in reading according to the installation direction.
(2) Remove the screws on the rear panel of the Measuring Display Unit, and change the direction according to the installation direction.

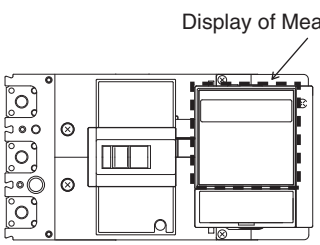


Installation with power supply side on left

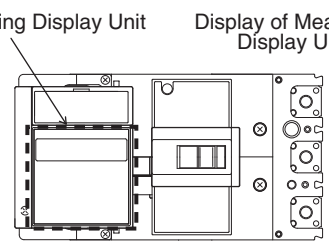


Installation with power supply side on right

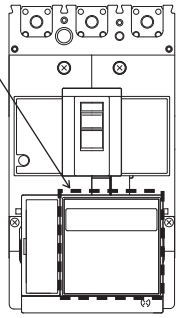

Default direction of Measuring Display Unit display

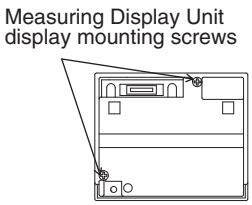

MEMO

| Model | | | BH | | | BH-P | | |
|---|---|---|---|---|---|---|---|---|
| Frame (A) | | | **70** | **100** | **100** | **70** | **100** | **100** |
| Image | | | | | | | | |
| Number of poles | | | 1 | 2 | 3 | 1 | 2 | 3 |
| Rated current (A) at ambient temperature 40°C | | | 70 | 70, 100 | 70, 100 | 70 | 70, 100 | 70, 100 |
| Rated voltage (V) | | AC | 230/400 | | | 230/400 | | |
| | | DC | 125 | | | 125 | | |
| Rated short cirsuit capacity (kA) | IEC 60898 | AC230/400V | 3 | – | | 3 | – | |
| | | AC400V | – | 3 | | – | 3 | |
| | – | DC125V | 1 | | | 1 | | |
| Instantaneous tripping | | | Type C (5 In <, ≦10 In) | | | | | |
| Dimensions (mm) 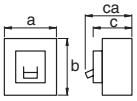  | | a | 25 | 50 | 75 | 25 | 50 | 75 |
| | | b | 95 | | | 74 | | |
| | | c | 57.5 | | | 60.5 | | |
| | | ca | 77.5 | | | 79 | | |
| Mass (kg) | | | 0.16 | 0.32 | 0.48 | 0.13 | 0.26 | 0.38 |
| Connection (*1) | | | Clamp terminal | | | Plug-in (line) Clamp (load) | | |
| | | | | | | | | |
| Automatic tripping device | | | Thermal, magnetic | | | | | |
| Optional accessories | Terminal cover | | ● | | | – | | |
| | Mounting plate | | ● | | | – | | |
| | Terminal base | | – | | | ● | | |
| | Lock cover | | ● | | | ● | | |
| Approved by | | | – | LR, GL, NK | – | – | LR, BV, AB, GL, NK | – |

Notes: *1 If reguired solderless terminal can be supplied.
(BH : Line and Load side, BH-P : Load side only)

| Model | | | BH-S M3 | | | BH-S M6 | | |
|---|---|---|---|---|---|---|---|---|
| Image | | | | | | | | |
| Number of poles | | | 1 | 2 | 3 | 1 | 2 | 3 |
| Rated current (A) at ambient temperature 40°C | | | 5, 10, 15, 20, (25), 30, 40, 50, 60 | 10, 15, 20, (25), 30, 40, 50, 60 | 15, 20, (25), 30, 40, 50, 60 | 5, 10, 15, 20, (25), 30, 40, 50, 60 | 10, 15, 20, (25), 30, 40, 50, 60 | 15, 20, (25), 30, 40, 50, 60 |
| Rated voltage (V) | | AC | 230/400 | 400 | 400 | 230/400 | 400 | 400 |
| | | DC | – | 125 | – | – | 125 | – |
| Rated short cirsuit capacity (kA) | IEC 60898 | AC230/400V | 3 | – | | 6 | – | |
| | | AC400V | – | 3 | | – | 6 | |
| | – | DC125V | – | 1 | – | – | 1 | – |
| Instantaneous tripping | | | Types B, C, D (*2) | | | | | |
| Dimensions (mm) 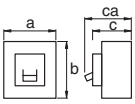 | | a | 25 | 50 | 75 | 25 | 50 | 75 |
| | | b | 95 | | | 95 | | |
| | | c | 57.5 | | | 57.5 | | |
| | | ca | 76 | | | 76 | | |
| Mass (kg) | | | 0.15 | 0.32 | 0.50 | 0.15 | 0.32 | 0.50 |
| Connection (*1) | | | Clamp terminal | | | | | |
| | | | | | | | | |
| Automatic tripping device | | | Thermal, magnetic | | | | | |
| Optional accessories | Terminal cover | | ● | | | | | |
| | Mounting plate | | ● | | | | | |
| | Handle lock | | ● | | | | | |
| | Lock cover | | – | | | | | |
| Approved by | | | – | | | | | |

Notes: *1 If required solderless terminal can be supplied. (Line and Load side)
*2 Type B (3 In <, ≦ 5 In), Type C (5 In <, ≦ 10 In), Type D (10 In <, ≦ 20 In)

| Model | | | BH-PS M3 | | | BH-PS M9 | | |
|---|---|---|---|---|---|---|---|---|
| Image | | | | | | | | |
| Number of poles | | | 1 | 2 | 3 | 1 | 2 | 3 |
| Rated current (A) at ambient temperature 40°C | | | 10, 15, 20, 30, 40, 50, 60 | 10, 15, 20, 30, 40, 50, 60 | 15, 20, 30, 40, 50, 60 | 6, 10, 16, 20, (25), 32, 40, 50, 60 | 10, 16, 20, (25), 32, 40, 50, 60 | 10, 16, 20, (25), 32, 40, 50, 60 |
| Rated voltage (V) | | AC | 230/400 | 400 | 400 | 230/400 | 400 | 400 |
| | | DC | – | 125 | – | – | | |
| Rated short cirsuit capacity (kA) | IEC 60898 | AC230/400V | 3 | – | | 9 | – | |
| | | AC400V | – | 3 | | – | 9 | |
| | – | DC125V | – | 1 | – | – | | |
| Instantaneous tripping | | | Types B, C, D (*1) | | | | | |
| Dimensions (mm) 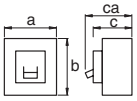  | | a | 25 | 50 | 75 | 25 | 50 | 75 |
| | | b | 81.5 | | | 81.5 | | |
| | | c | 60.5 | | | 60.5 | | |
| | | ca | 79 | | | 79 | | |
| Mass (kg) | | | 0.15 | 0.32 | 0.50 | 0.15 | 0.32 | 0.50 |
| Connection | | | Plug-in (line) | | | Clamp (load) | | |
| | | | | | | | | |
| Automatic tripping device | | | Thermal, magnetic | | | | | |
| Optional accessories | Terminal cover | | – | | | | | |
| | Terminal base | | ● | | | | | |
| | Lock cover | | – | | | | | |
| | Handle lock | | ● | | | | | |
| Approved by | | | – | | | LR | | |

Note: *1 Type B (3 In <, ≦ 5 In), Type C (5 In <, ≦ 10 In), Type D (10 In <, ≦ 20 In)

| Model | | | | BH-D6 | | | | | BH-D10 | | | | BH-DN |
|---|---|---|---|---|---|---|---|---|---|---|---|---|---|
| Image | | | | | | | | | | | | | |
| Number of poles [P] | | | | 1 | 2 | 3 | 4(3+N)*1 | 2(1+N)*1 | 1 | 2 | 3 | 4(3+N)*1 | 2 (1+N)*1 |
| Instantaneous tripping | | | | Type B, C, D*2 | | | | Type B, C*2 | Type B, C, D*2 | | | | Type C*2 |
| Rated insulation voltage $U_i$ [V] | | | | 440 | | | | | 440 | | | | 230 |
| Rated current $I_n$ [A] at ambient temperature 30°C | | | | 0.5, 1, 1.6, 2, 3, 4, 6, 10, 13, 16, 20, 25, 32, 40, 50, 63 | | | | 0.5, 1, 1.6, 2, 3, 4, 6, 10, 13, 16, 20, 25, 32, 40 | 0.5, 1, 1.6, 2, 3, 4, 6, 10, 13, 16, 20, 25, 32, 40, 50, 63 | | | | 6, 10, 16, 20 |
| Rated short-circuit capacity [kA] | IEC60898-1 (Icn) | AC | 230V | 6 | – | | | 6 | 10 | – | | | 4.5 |
| | | | 230/400V | 6 | – | | | – | 10 | – | | | – |
| | | | 400V | – | 6 | | | – | – | 10 | | | – |
| Number of operating cycles | | Without current | | 8,000 | | | | | 10,000 | | | | 20,000 |
| | | With current | | 8,000 | | | | | 10,000 | | | | 20,000 |
| Dimensions [mm] 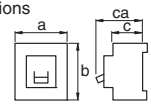 | | | a | 18 | 36 | 54 | 72 | 36 | 18 | 36 | 54 | 72 | 18 |
| | | | b | 87 | | | | | 87 | | | | 88 |
| | | | c | 44 | | | | | 44 | | | | 44 |
| | | | ca | 70 | | | | | 70 | | | | 70 |
| Type of overcurrent release | | | | Thermal-magnetic | | | | | Thermal-magnetic | | | | Thermal-magnetic |
| Mounting | | | | IEC35mm rail | | | | | IEC35mm rail | | | | IEC35mm rail |
| Applicable wire size | | | | 1 to 25mm$^2$ | | | | | 1 to 25mm$^2$ | | | | 1 to 10mm$^2$ |
| Weight [kg] | | | | 0.15 | 0.3 | 0.45 | 0.55 | 0.25 | 0.15 | 0.3 | 0.45 | 0.55 | 0.12 |
| Mass optional accessories | Alarm switch (AL) | | | ● | | | | | ● | | | | – |
| | Auxiliary switch (AX) | | | ● | | | | | ● | | | | – |
| | Shunt trip (SHT) | | | ● | | | | | ● | | | | – |
| Terminal connection | | | | Solderless | | | | | Solderless | | | | Solderless |
| Based on standard | | | | IEC60898-1 | | | | | IEC60898-1 | | | | IEC60898-1 |
| CE marking | | | | EN60898-1 : Self-declaration | | | | | EN60898-1 : Self-declaration | | | | EN60898-1 : Self-declaration |
| CCC | | | | GB10963.1 | | | | | GB10963.1 | | | | GB10963.1 |

Notes: *1 N pole is a switched neutral pole (without overcurrent release device).
*2 Type B (3 In <, ≦ 5 In), Type C (5 In <, ≦ 10 In), Type D (10 In <, ≦ 20 In)

| Model | | | | BH-D10 (For DC) | |
|---|---|---|---|---|---|
| Image | | | | | |
| Number of poles [P] | | | | 1 | 2 |
| Instantaneous tripping | | | | Type B, C*3 | |
| Rated insulation voltage $U_i$ [V] | | | | 250 | |
| Rated current $I_n$ [A] at ambient temperature 30°C | | | | 0.5, 1, 1.6, 2, 3, 4, 6, 10, 13, 16, 20, 25, 32, 40, 50, 63 | |
| Rated short-circuit capacity [kA] | IEC60898-2 (Icn) | DC | 125V | 10 | – |
| | | | 250V | – | 10 |
| Number of operating cycles | | Without current | | 8,000 | |
| | | With current | | 4,000 | |
| Dimensions [mm] 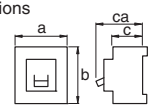 | | | a | 18 | 36 |
| | | | b | 87 | |
| | | | c | 44 | |
| | | | ca | 70 | |
| Type of overcurrent release | | | | Thermal-magnetic | |
| Mounting | | | | IEC35mm rail | |
| Applicable wire size | | | | 1 to 25mm$^2$ | |
| Weight [kg] | | | | 0.15 | 0.3 |
| Mass optional accessories | Alarm switch (AL) | | | ● | |
| | Auxiliary switch (AX) | | | ● | |
| | Shunt trip (SHT) | | | ● | |
| Terminal connection | | | | Solderless | |
| Based on standard | | | | IEC60898-2 | |
| CE marking | | | | EN60898-2 : Self-declaration | |
| CCC | | | | GB10963.2 | |

Notes: *3 Type B: (5 In <, ≦ 7 In), Type C: (7 In <, ≦ 15 In)

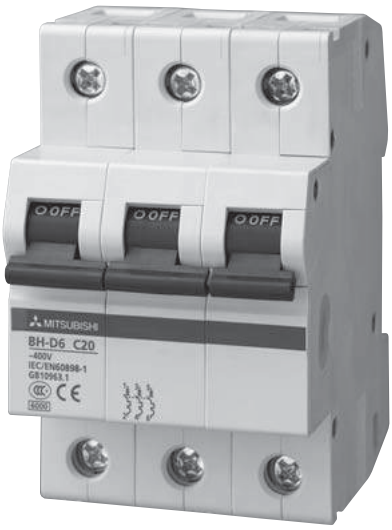

| | | RCCB | |
|---|---|---|---|
| Model | | BV-D | |
| Image | | | |
| Number of poles [P] | | 2(1+N)*1 | 4(3+N)*1 *3 |
| Rated current [A] at ambient temperature 30°C | | 25, 40, 63 | |
| Rated voltage [VAC] | | 230 | 230/400 |
| Rated current sensitivity I∆n [mA] | | 30, 300 | |
| Max. operating time at 5I∆n [s] | | 0.04 | |
| Pulsating current sensitivity | | Type AC | |
| Rated conditional short-circuit current [kA] | | 6 | |
| Dimensions [mm] 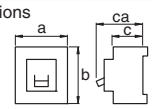 | a | 36 | 72 |
| | b | 85 | |
| | c | 44 | |
| | ca | 70 | |
| Mass [kg] | | 0.2 | 0.35 |
| Rated making and breaking capacity Im [A] | | 500(In 25,40A), 630(In63A) | |
| Rated conditional short-circuit current Inc [kA] | | 6 | |
| Rated residual making and breaking capacity I∆m [A] | | 500(In 25,40A), 630(In63A) | |
| Rated conditional residual short-circuit current I∆c [kA] | | 6 | |
| Number of operating cycles | Without current | 8,000 | |
| | With current | 8,000 | |
| Type of overcurrent release | | – | |
| Mounting | | IEC35mm rail | |
| Applicable wire size | | 1 to 25mm$^2$ | |
| Weight [kg] | | 0.2 | 0.35 |
| Terminal connection | | Solderless | |
| Based on standard | | IEC61008-1 | |
| CE marking | | EN61008-1 : Self-declaration | |
| CCC | | GB16916 | |

| | | RCBO |
|---|---|---|
| Model | | BV-DN |
| Image | | |
| Number of poles [P] | | 2(1+N)*1 |
| Rated current [A] at ambient temperature 30°C | | 6, 10, 16, 20, 25, 32, 40 |
| Rated voltage [VAC] | | 230 |
| Rated current sensitivity I∆n [mA] | | 30, 100, 300 |
| Max. operating time at 5I∆n [s] | | 0.04 |
| Pulsating current sensitivity | | Type AC |
| Breaking capacity [kA] sym. (IEC 61009) | | 4.5 |
| Tripping characteristics | | Type C*2 |
| Dimensions [mm] 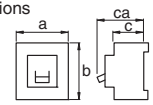 | a | 36 |
| | b | 88 |
| | c | 44 |
| | ca | 70 |
| Mass [kg] | | 0.19 |
| Automatic tripping device | | Thermal, magnetic |
| Number of operating cycles | Without current | 20,000 |
| | With current | 20,000 (In 6,10,16,20A)<br>15,000 (In 25A)<br>10,000 (In 32,40A) |
| Type of overcurrent release | | Thermal-magnetic |
| Mounting | | IEC35mm rail |
| Applicable wire size | | 1 to 16mm$^2$ |
| Weight [kg] | | 0.19 |
| Terminal connection | | Solderless |
| Based on standard | | IEC61009-1 |
| CE marking | | EN61009-1 : Self-declaration |
| CCC | | GB16917 |

Notes: *1 N pole is a switched neutral pole (without overcurrent release device).
*2 Type C: (5 In <, ≦ 10 In)
*3 For use to three phase 4-wire type. When using, it be sure to connect the neutral wire to the neutral phase. Not available for use to three phase 3-wire type.

| | | Isolating switch | | | |
|---|---|---|---|---|---|
| Model | | KB-D | | | |
| Image | | | | | |
| Number of poles [P] | | 1 | 2 | 3 | 4(3+N) |
| Utilization category | | AC22A class | | | |
| Rated current [A] at ambient temperature 30°C | | 32, 63, 80 | | | |
| Rated voltage [VAC] | | 230 | 400 | | |
| Short time withstand current [A] | | 20 × In, 1s | | | |
| Short-circuit making capacity [A] | | 20 × In | | | |
| Dimensions [mm] 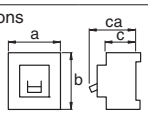 | a | 18 | 36 | 54 | 72 |
| | b | 87 | | | |
| | c | 44 | | | |
| | ca | 70 | | | |
| Mass [kg] | | 0.09 | 0.18 | 0.27 | 0.36 |
| Number of operating cycles | Without current | 20,000 | | | |
| | With current | 3,000 | | | |
| Mounting | | IEC35mm rail | | | |
| Applicable wire size | | 1 to 25mm$^2$ | | | |
| Weight [kg] | | 0.1 | 0.2 | 0.3 | 0.4 |
| Terminal connection | | Solderless | | | |
| Based on standard | | IEC60947-3 | | | |
| CE marking | | EN60947-3 : Self-declaration | | | |
| CCC | | GB14048.3 | | | |

## Accessories for Miniature Circuit Breakers

### ■Functions of Accessories

| Internal accessory | Function |
|---|---|
| **AL** Alarm switch | Electrically indicates the trip status of the circuit breaker. |
| **AX** Auxiliary switch | Electrically indicates the On/Off status of the circuit breaker. |
| **SHT** Shunt trip | Electrically trips the circuit breaker from a remote location.<br>Permissible working voltages are 70 to 110% of the AC rated voltage or 70 to 125% of the DC rated voltage. |

### ■Equipping of Accessories

| Accessory \ Model | BH-D6 | BH-D10 | BH, BH-P, BH-S, BH-PS, BH-DN, BV-DN, KB-D, BV-D |
|---|---|---|---|
| **AL** | ○ | ○ | – |
| **AX** | ○ | ○ | |
| **SHT** | ○ | ○ | |

○: Accessory equipped
–: Accessory not equipped

### ■Specifications

| Type | | AL | AX | AL+AX | AX+AX |
|---|---|---|---|---|---|
| | | AL-05DLS | AX-05DLS | ALAX-05DLS | AX2-05DLS |
| Contact | Configuration | 1C | 1C | 2C | 2C |
| | Contact capacity | 400VAC, 2A 230VAC, 5A 130VDC, 0.4A 48VDC, 1.5A | | | |
| Function | Line | – | – | AX | AX |
| | Load | AL | AX | AL | AX |
| Connection | | Busbar terminal | | | |
| Compliance standard | | IEC60947-5-1 GB14048.5 | | | |

| Type | SHT | |
|---|---|---|
| | SHTA400-05DLS | SHTD048-05DLS |
| Cut-off switch | Equipped | |
| Voltage | 110-400VAC | 24-48VDC |
| Input power requirement | 110VAC 60VA<br>230VAC 250VA<br>400VAC 750VA | 24VDC 75VA<br>48VDC 300VA |
| Operating time [ms] | <20 | |
| Connection | Solderless terminal | |
| Compliance standard | IEC60947-2 GB14048.2 | |

* Secure a sufficient input power supply so that the voltage will not drop below the permissible lower working voltage (70% of the lowest rated voltage).
* The operating time denotes the time from when the rated voltage is applied to SHT until the time the main contact of the breaker starts to open.

## Combinations of Accessories

| | | |
|---|---|---|
| Accessory connection combinations | AL | |
| | AX | |
| | 2AX | |
| | ALAX | |
| | SHT | |
| | AX+SHT | |
| | AL+SHT | |
| | 2AX+SHT | |
| | ALAX+SHT | |

Breaker AL AX AL+AX AX+AX SHT

## Outline Drawing

AL-05DLS

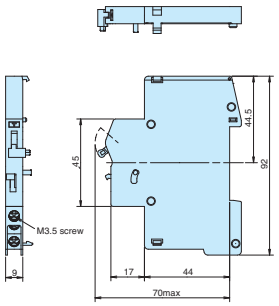


AX-05DLS

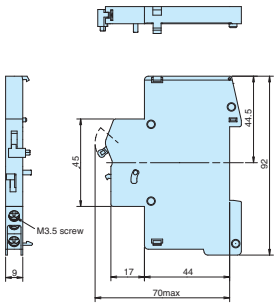


ALAX-05DLS
AX2-05DLS

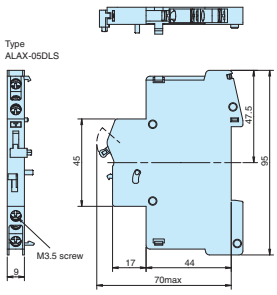


SHTA400-05DLS
SHTD048-05DLS

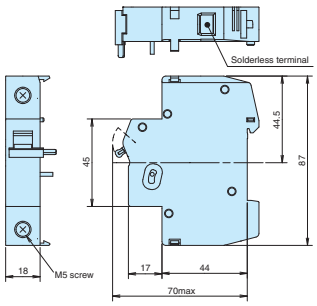


## Connection of Line and Load Side

AL-05DLS

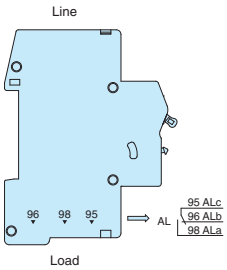


AX-05DLS

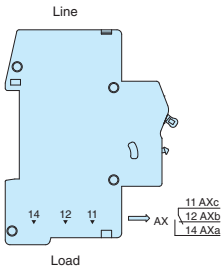


ALAX-05DLS

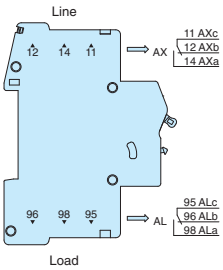


AX2-05DLS

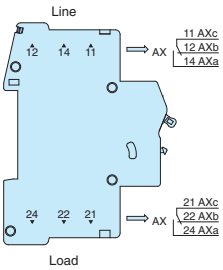


## Installation of Accessories (AX, AL, SHT)

### (1) Installation

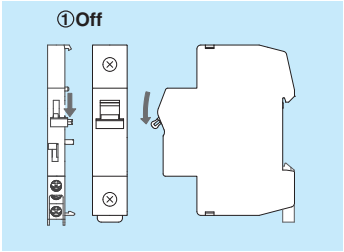


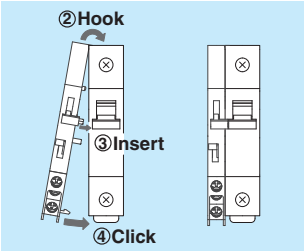


### (2) Removal

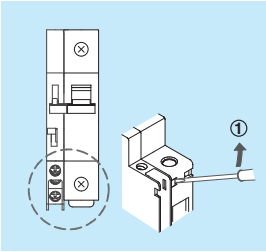


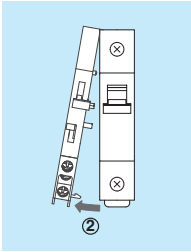

| Frame (A) | | | | 30 | | | | | |
|---|---|---|---|---|---|---|---|---|---|
| Model | | | | CP30-BA | | | CP-S | | |
| Image | | | | | | | | | |
| Number of poles | | | | 1 | 2 | 3 | 1 | 2 | 3 |
| Rated insulation voltage Ui (V) | | | | 250 | | | 250 | | |
| Rated impulse withstand voltage Uimp (kV) | | | | 2.5 | | | 2.5 | | |
| Rated current (A) | | | | 0.1 0.25 0.3 0.5 1 2 3 5 7 10 15 20 30 | | | 0.05 0.1 0.25 0.3 0.5 0.75 1 2 2.5 3 5 7 7.5 10 15 20 25 30 | | |
| Rated short-circuit capacity (kA) | UL 1077<br>CSA C22.2 No.235 (*11) | Rated voltage (V) | AC (V) | 250 | | | 250 | – | |
| | | | DC (V) | 65 | 125 | – | 65 | – | |
| | | AC | | 2.5kA at 250V | | | 1.5kA at 250V | – | |
| | | DC | | 2.5kA at 65V | 2.5kA at 125V | – | 1kA at 65V | – | |
| | IEC 60934<br>EN 60934<br>(Icn) | Rated insulation voltage Ui (V) | | 250 | | | 250 | | |
| | | AC | | 250 | | | 1.5kA at 230V<br>2.5kA at 120V | | |
| | | DC | | 2.5kA at 60V | 2.5kA at 120V | – | 1kA at 60V | 1kA at 120V<br>(1kA at 60V) (*7) | 1kA at 60V |
| | EN 60947-2<br>IEC 60947-2<br>(Icu/Ics) | Rated insulation voltage Ui (V) | | 250 | | | – | | |
| | | AC | | 2.5/2.5kA at 230V | | | – | | |
| | | DC | | 2.5/2.5kA at 60V | 2.5/2.5kA at 120V | – | – | | |
| AC-DC common use | | | | ● | | – (*1) | – (*8) | | |
| Reverse connection | | | | ● | | | – | | |
| Rated short time current<br>(for switch only type) | | | | – | | | AC250V 50/60Hz 1500A 0.02s<br>AC125V 50/60Hz 2500A 0.02s<br>DC65V 1000A 0.02s<br>DC125V 1000A 0.02s | | |
| Rated ambient temperature (°C) | | | | 40 (T40) | | | 25 (T25) | | |
| Operating characteristics | | | | Instantaneous type (I); Medium type (M), (MD);<br>Slow type (S), (SD); Fast type (F) (*2) | | | Instantaneous type (I); Medium type (M), (MD);<br>Slow type (S), (SD); Fast type (F) (FD) | | |
| Mode of tripping | | | | Instantaneous type (I): magnetic only [MO] | | | Instantaneous type (I): magnetic only [MO] | | |
| | | | | Medium type (M), (MD)<br>Slow type (S), (SD) : hydraulic-magnetic [HM]<br>Fast type (F) | | | Medium type (M), (MD)<br>Slow type (S), (SD) : hydraulic-magnetic [HM]<br>Fast type (F), (FD) | | |
| Method of operation | | | | S-type (IEC 60934) | | | | | |
| Trip-free behaviour | | | | Trip-free (IEC 60934) | | | | | |
| Mass (kg) | | | | 0.08 | 0.16 | 0.23 | 0.06 | 0.12 | 0.18 |
| Accessories | Retractable small terminal cover (TC-S) | | | ●Standard IP20 (front, terminal covers closed) [Certified of TUV] | | | – | | |
| | Inertial delay (ID) | | | ● (Medium, Slow type: AC only) | | | ● (Medium, Slow, Fast type: AC only) | | |
| | Alarm switch (AL) | | | ● (1c) | | | ● (1c) (*7) | | |
| | Auxiliary switch (AX) | | | ● (1c) | | | ● (1c) | | |
| | Shunt trip (SHT) | | | ● (for relay type) (*3) | | | ● (for parallel and relay type: AC only) | | |
| | Large terminal cover (TC-L) | | | ● (*6) | | | – | | |
| | Flushpanel mounting brackets (FP) | | | ● | | | – | | |
| | Back facing wiring termnal (BT) | | | ● (*4), (*6) | | | – | | |
| | Lock cover (LC) | | | – | | | ● | | – |
| | Accessory terminal cover (TC) | | | ● (*6) | | | – | | |
| Connection | Main body | | | 20A or less : Screw terminal M4<br>30A : Screw termnal M5 | | | Male tub terminal 6.3mm (#250)<br>[Screw terminal M4 (series type only)] | | |
| | Alarm switch / Auxiliary switch | | | Screw terminal M3.5 | | | Male tub terminal 2.8mm (#110) | | |
| Main body mounting method | | | | Srface, IEC rail mounting<br>Flush panel mounting (option) | | | Panel mounting | | |
| International standard | | | | UL(cURus), CCC (*5) | | | UL(UR) (*9), (*10) | – | |
| CE Marking | | | | EN 60934 : TUV approval<br>EN 60947-2 : Self-declaration (*5) | | | EN 60934 : TUV approval (*10) (Operating characteris is Medium type (M) only. The rated current, 0.3A, 2A, 3A and 7A are not applied.) | | |

Notes:
*1 The 3-pole products are for AC use only.
*2 Contact us for operating characteristics other than those mentioned above.
*3 In poles equipped with a shunt tripping mechanism, the overcurrent tripping element is not operative (switched shunt tripping).
*4 For back-face wiring terminals, specify if it will be used with 30A, or 20A or less.
*5 UL(cURus), CCC, and CE Marking are displayed on standard products.
*6 It is recognition of UL(cURus), CCC, and TUV.
*7 In case of DC use, only DC65V is available.
*8 Specify if for DC use when ordering.
*9 Specify when ordering. (In case of CP-S UL, type name is CP-SU.)
*10 Connection is male tub terminal only.
*11 CP30-BA only.

Remarks:
1. Products for non-standard conditions are special order. (Low temperature, 1st and 2nd-degree moisture fungal treatment, corrosion-resistant)
2. Although a buzzing sound may occur when an instantaneous type becomes 80% or more of the rated current for AC use, performance is not effected. Please take this point into consideration when selecting units for use in quiet environments.
3. Please use in environments free of high temperatures, humidity, dust, corrosive gas, vibration, and impact.
Also, do not use it in a circuit with inrush current or harmonics. Problems may result.

## ■Internal circuits and examples of application

| Internal circuit | Available model | Operating characteristics: Instantaneous type I | High speed type F | High speed type FD | Medium speed type M | Medium speed type MD | Low speed type S | Low speed type SD | shunt trip |
|---|---|---|---|---|---|---|---|---|---|
| Serial type 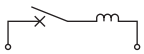 | CP30-BA | ● | ● | – | ● | ● | ● | ● | – |
| | CP-S | ● | ● | ● | ● | ● | ● | ● | – |
| Serial type with auxiliary switch 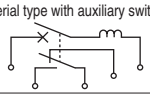 | CP30-BA | ● | ● | – | ● | ● | ● | ● | – |
| | CP-S | ● | ● | ● | ● | ● | ● | ● | – |
| Serial type with alarm switch 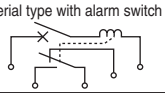 | CP30-BA | ● | ● | – | ● | ● | ● | ● | – |
| | CP-S | ● | ● | ● | ● | ● | ● | ● | – |
| Relay type shunt trip (with SHT) 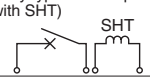  | CP30-BA | – | – | – | – | – | – | – | ● |
| | CP-S | – | – | – | – | – | – | – | ● |
| Parallel type shunt trip (with SHT) 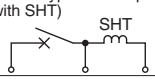  | CP-S | – | – | – | – | – | – | – | ● |
| Relay type current trip | CP-S | ● | ● | ● | ● | ● | ● | ● | – |
| Parallel type current trip | CP-S | ● | ● | ● | ● | ● | ● | ● | – |
| Switch type 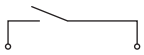 | CP-S | – | – | – | – | – | – | – | – |

## ■Internal accessories

### Auxiliary switch (AX)

Operates in conjunction with the main circuit operating mechanism to electrically retrieve the ON/OFF status of protector.

### Alarm switch (AL)

Operates in conjunction with the main circuit operating mechanism to electrically retrieve the tripping status of protector.

Remarks (1) When the handle of CP30-BA is constrained in the ON status, it does not issue the alarm signal even if it is tripped.
(2) The alarm switch will be reset when the body is reset or turned on.

### Shunt trip (SHT)

A parallel relay type protector, which can break the circuit instantaneously when receiving an external signal

### Inertial delay device

The inertial delay device is designed to avoid unnecessary operation caused by inrush current of transformer or lamp load. The device can withstand unrepeated one pulse of crest value 20 times higher than the rated current (pulse time = 8 ms). It can be added to circuits having high, medium and low speed operating characteristics. (It cannot be added to instantaneous or DC types.)

## ●Ratings of alarm switches (AL) and auxiliary switches (AX)

**(1) For CP30-BA**

| | | | AC Voltage (V) | AC Current (A) Resistive load | AC Current (A) Inductive load | DC Voltage (V) | DC Current (A) Resistive load | DC Current (A) Inductive load |
|---|---|---|---|---|---|---|---|---|
| Ratings of items other than those shaded in Table 1 | For general load | Max. | (250) | (1) | (0.5) | 50 | 1 | 0.5 |
| | | | 125 | 3 | 1 | 30 | 2 | 1 |
| | | Min. | 0.1A/15VAC | | | 0.1A/15VDC | | |
| | For minute load | Max. | 125 | 0.5 | – | 30 | 0.5 | – |
| | | Min. | 1mA/24VDC, 2mA/12VDC, 5mA/6VDC | | | | | |
| Ratings of items shaded in Table 1 | For general load | Max. | (250) | (1) | (0.5) | (50) | (1) | (0.5) |
| | | | 125 | 3 | (1) | 30 | (2), 0.5 | (1) |
| | | Min. | 0.1A/15VAC | | | 0.1A/15VDC | | |
| | For minute load | Max. | 125 | (0.5), 0.1 | – | 30 | (0.5), 0.1 | – |
| | | Min. | 1mA/24VDC, 2mA/12VDC, 5mA/6VDC | | | | | |

Remarks: 1. The switches having the ratings in parentheses are manufactured at the customer's request. (Specify the voltage). Such switches do not conform to UL (cURus), CCC or CE Marking requirements.

**(2) For CP-S**

| AC Voltage (V) | AC Current (A) Resistive load | AC Current (A) Inductive load | DC Voltage (V) | DC Current (A) Resistive load | DC Current (A) Inductive load |
|---|---|---|---|---|---|
| 250 | 3 | 2 | 250 | 0.2 | 0.2 |
| 125 | 5 | 3 | 125 | 0.4 | 0.4 |
| – | – | – | 30 | 4 | 3 |
| – | – | – | 14 | 5 | 4 |

Remarks: 1. When using these switches to a circuit with a minute load (125 V AC, 0.1 A or 30 V DC, 0.1 A or less), designate the application as minute load.

## ●Ratings of shunt trip (SHT) coils

**(1) For CP30-BA**

**Ratings**

| Rated operating voltage (V) | | Time rating |
|---|---|---|
| 100-200 | Compatible with 100 to 200 V AC and 100 V DC | 10 sec or less |
| 24-48 | Compatible with 24 to 48 V DC | |

**Coil resistance, resistance and impedance** (at25°C)

| Voltage (V) | Impedance for AC (Ω) | DC resistance for DC (Ω) |
|---|---|---|
| 24-48 | – | 160 |
| 100-200 | 2400 | 2100 |

Remarks: 1. The allowable range is 70 to 110% of the rated voltage for AC and 75 to 120% of the rated voltage for DC.
2. The time rating is 10 seconds or less. Configure the circuit on which voltage will not be applied for more than 10 seconds.

**(2) For CP-S**

**Ratings**

| Rated operating voltage (V) | | Time rating |
|---|---|---|
| 100 | Compatible with 100 to 120 V AC (50/60Hz) | 10 sec or less |
| 200 | Compatible with 200 to 240 V AC (50/60Hz) | |
| 24, 48, 100 | DC24, DC48, DC100 | |

**Coil resistance, resistance and impedance** (at25°C)

| Voltage (V) | Impedance for AC (Ω) | DC resistance for DC (Ω) |
|---|---|---|
| 24 | – | 110 |
| 48 | – | 110 |
| 100 | 1100 | 400 |
| 200 | 1100 | – |

Remarks: 1. The allowable range is 70 to 110% of the rated voltage for AC and 75 to 120% of the rated voltage for DC.
2. The time rating is 10 seconds or less. Configure the circuit on which voltage will not be applied for more than 10 seconds.

**●Operation of auxiliary switch and alarm switch**

| Protector status | | Switch status CP30-BA, CP-S |
|---|---|---|
| AX | Off or trip | 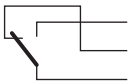 AXa (open) / ALa (closed)<br>AXb (open) / ALb (closed)<br>AXc / ALc |
| AL | Off or ON | |
| AX | ON | 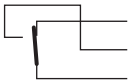 AXa (closed) / ALa (open)<br>AXb (closed) / ALb (open)<br>AXc / ALc |
| AL | Trip | |

**Table 1 List of numbers of internal accessories which can be fitted**

●AL ○AX ◐AL or AX ■SHT

| Type name | AX 1P | AX 2P | AX 3P | AX More than one 1P | AX More than one 2P | AX More than one 3P | AX More than one 3P | AL 1P | AL 2P | AL 3P | AL+AX 1P | AL+AX 2P | AL+AX 3P | AL+AX 3P | SHT 1P | SHT 2P | SHT 3P | AL+SHT or AX+SHT 1P | AL+SHT or AX+SHT 2P | AL+SHT or AX+SHT 3P | AL+SHT or AX+SHT 3P | AL+AX+SHT 3P |
|---|---|---|---|---|---|---|---|---|---|---|---|---|---|---|---|---|---|---|---|---|---|---|
| CP30-BA | ○ | | ○ | – | ○ | ○ | ○ | ● | | ● | – | ○ | ● | ○ | ■ | ■ | ■ | | ■ | ◐ | ■ | ■ | ○ | ● |
| | | | | | | ○ | ○ | | | | | | ○ | ● | | | | | ◐ | ■ | ◐ | ■ | ○ | ○ |
| | | | ○ | | | | ○ | | | ● | | | | ○ | | | | | | | | | | |
| CP-S | ○ | ○ | | – | ○ | ○ | | ● | ● | | – | ● | ○ | | ■ | | ■ | – | ◐ | ■ | ◐ | ■ | – | ● | ○ | ■ |
| | | | ○ | | | ○ | | | | ● | | | ● | ○ | | | | | | | | | | |
| | | | | | | | ○ | | | | | | | ● | | | | | | | | | | |

Remark: 1. All accessories should be fitted on the internal accessory terminal block.

## Installation and connection

| Installation method | With screws | On IEC rails | With embedded fittings | On panel |
|---|---|---|---|---|
| Appearance | | 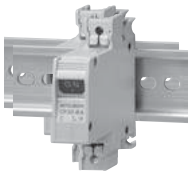 | Circuit protectors with AL, AX and/or SHT cannot be installed by this method. | |
| CP30-BA | ● | ● | ● | – |
| CP-S | – | – | – | ● |

## Installation posture

The operating characteristics of electromagnetic (instantaneous) type circuit protectors are not affected by the installation posture. However, when installing a fluid electromagnetic (high, medium or low speed) type circuit protector, pay attention to the installation angle because the operating current value is changed under the influence of the gravity applied to the iron core in the oil dash pot.
Generally, it is recommended to use the circuit protectors in the vertical direction.

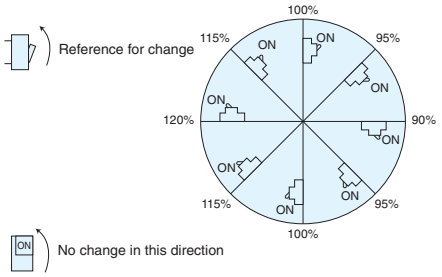


## Electric wires which can be connected and applicable screw terminals

**CP30-BA**

| Classification | Shape of terminal | | | Electric wire size used ($mm^2$) | Applicable screw terminals | Tightening torque (N • m) |
|---|---|---|---|---|---|---|
| Body | Threaded terminal (standard specification) 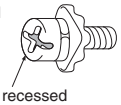 Cross recessed or slotted | 20 A or less | M4 | 0.25-1.65 | R1.25-4 R1.25-5 | M4 1-1.4 |
| | | | | 1.04-2.63 | R2-4 R2-5 | |
| | | 30A | M5 | 2.63-6.64 | R5.5-4 R5.5-5 | M5 1.8-2.2 |
| | | | | 6.64-10.52 | *8-5NS (made by JST) | |
| Alarm and auxiliary switch terminals | Wire retaining screw (square washer) Cross recessed or slotted | M3.5 | | 0.25-1.65 | R1.25-3.5 | 0.7-0.9 |
| | | | | 1.04-2.63 | R2-3.5 | |

*Use the screw terminal 8-5NS made by JST.

## Low Voltage Air Circuit Breakers (AE-SW Series)

| Frame (A) | | | 630 | 1000 | 1250 | 1600 | 2000 | 2000 | 2500 | 3200 | 4000 |
|---|---|---|---|---|---|---|---|---|---|---|---|
| Model | | | AE630-SW | AE1000-SW | AE1250-SW | AE1600-SW | AE2000-SWA | AE2000-SW | AE2500-SW | AE3200-SW | AE4000-SWA |
| Image | | | AE1600-SW (Drawout type) ●See the catalog of Mitsubishi Low Voltage Air Circuit Breakers, Y-0622, for the details. | | | | | | | | |
| Rated current (CT rating) In (A) | | | 630 (*1) | 1000 | 1250 | 1600 | 2000 | 2000 (*1) | 2500 | 3200 | 4000 |
| Rated current setting Ir (A) (adjustable) (Rated ambient temperature 40°C) (For marine use 45°C) | | | 315-346.5-378-409.5-441-472.5-504-535.5-567-598.5-630 (*1) | 500-550-600-650-700-750-800-850-900-950-1000 | 625-687.5-750-812.5-875-937.5-1000-1062.5-1125-1187.5-1250 | 800-880-960-1040-1120-1200-1280-1360-1440-1520-1600 | 1000-1100-1200-1300-1400-1500-1600-1700-1800-1900-2000 | 1000-1100-1200-1300-1400-1500-1600-1700-1800-1900-2000 (*1) | 1250-1375-1500-1625-1750-1875-2000-2125-2250-2375-2500 | 1600-1760-1920-2080-2240-2400-2560-2720-2880-3040-3200 | 2000-2200-2400-2600-2800-3000-3200-3400-3600-3800-4000 |
| Number of poles | | | 3, 4 (*2) | | | | | | | | |
| Rated insulation voltage V | | | 1000 | | | | | | | | |
| Current carrying capacity of neutral pole A | | | 630 | 1000 | 1250 | 1600 | 2000 | 2000 | 2500 | 3200 | 4000 |
| Rated breaking capacity (kA symmetrical RMS) | IEC 60947-2, EN 60947-2 BS JIS C 8201-2-1 Ann.1 Ann.2 | AC690V | 65 | | | | | 75 | | | |
| | | AC600V | 65 | | | | | 75 | | | |
| | NK, LR, GL, BV, ABS, DNV, CCS | AC240-500V | 65 | | | | | 85 | | | |
| | Ics = % Icu | | 100% | | | | | | | | |
| Rated short-time withstand current (kA symmetrical RMS) | | 1 second | 65 | | | | | 75 | | | |
| Suitability for isolation | | | Compatible | | | | | | | | |
| Reverse connection | | | Possible | | | | | | | | |
| Number of operating cycles | | Without current | 25000 | | | | | 20000 | | | |
| | | With current (690 V AC) | 5000 | | | | 1500 | 1500 | | 1000 | 500 |
| Outline dimension (mm) Height (H) x width (W) x depth (D) | Fixed type | 3-pole product | 410×340×290 | | | | | 410×475×290 | | | |
| | | 4-pole product | 410×425×290 | | | | | 410×605×290 | | | |
| | Drawout type | 3-pole product | 430×300×368 | | | | | 430×435×368 | | | 430×439×368 |
| | | 4-pole product | 430×385×368 | | | | | 430×565×368 | | | 430×569×368 |
| Weight (kg) (Without Accessory) | Fixed type | 3-pole product | 40 | 41 | | 42 | 47 | 60 | 61 | 63 | 81 |
| | | 4-pole product | 50 | 51 | | 52 | 57 | 72 | 73 | 75 | 99 |
| | Drawout type | 3-pole product | 63 | 64 | | 65 | 70 | 92 | 93 | 95 | 108 |
| | | 4-pole product | 77 | 78 | | 79 | 84 | 113 | 114 | 116 | 136 |
| | Cradle only | 3-pole product | 26 | | | | 31 | 35 | | 36 | 49 |
| | | 4-pole product | 30 | | | | 35 | 43 | | 44 | 61 |
| CE Marking | | | Self-declaration | | | | | | | | |
| CCC recognition (☆ Certified) | | | ☆ | | | | | | | | |
| Marine approval | | | ☆Certified (NK, LR, GL, BV, ABS, DNV, CCS) | | | | | | | | |
| Automatic tripping device | | | Electronic (effective value detection) | | | | | | | | |

●When the MCR is provided, the breaking capacity may be changed. See the catalog of Mitsubishi Low Voltage Air Circuit Breakers, Y-0622.

●See the catalog of Mitsubishi Low-voltage Air Circuit Breakers, Y-0622, for the details of the accessories.

Notes: *1 AE630-SW and AE2000-SW having low rating types are available. See the catalog of Mitsubishi Low Voltage Air Circuit Breakers, Y-0622, for the details.
*2 The 4-pole products do not have obtained the marine approval.
*3 4 (HN) means the neutral poles current capacity is 50% of the rated current, for 4poles.
4 (FN) means the neutral poles current capacity is 100% of the rated current, for 4poles.
*4 ( ) shows the value for 4P FN type.
*5 Marine approval value is 138kA.

## Features

- **Higher reliability by High operating durability (Mechanical)**
- **Increase of rated short-time withstand current**
  Combination of the Electronic trip relay (ETR) with MCR (*1) enables increase of the choice coordination range.
- **Applicability to increase and decrease of load and improvement of protection coordination**
  The electronic tripping system enables detailed setting of tripping characteristics. The system uses RMS detection resistant to distorted waves.
- **More improved Electronic trip relay (ETR) and transmission functions**
  To flexibly meet various requirements, functions suitable for purposes can be selected effectively. In addition, improved measuring functions are provided, so that the circuit breakers are applicable to CC-Link, PROFIBUS-DP and MODBUS transmission and helpful in establishing various electrical circuit measurement monitoring systems and energy-saving systems in combination with measuring display unit breakers.

Notes: *1 MCR is an abbreviation for marking current release. It has INST characteristic only when the circuit breaker in the OFF state turns ON (closes). The circuit breaker will lose the INST characteristic after closing, and it will have LTD and STD characteristics.

- **Various connections**
  Various connections for panel structures are available. (See the following figure.)

### Connections

| Connections / Model | Horizontal (standard) | Vertical (*1) (VT) | Front (FT) | Vertical terminal adapter (VTA) | Front terminal adapter (FTA) |
|---|---|---|---|---|---|
| Fixed type (FIX) | (Standard) | FIX-VT | — | (FIX-VTA) | (FIX-FTA) |
| Drawout type (DR) | (Standard) | (DR-VT) | (DR-FT) | (DR-VTA) | (DR-FTA) |

Notes: *1 For AE2000-SWA, AE4000-SWA, AE4000-SW, AE5000-SW and AE6300-SW models, vertical terminal only is available.

## Low Voltage Air Circuit Breakers (AE-SW Series)

| Frame (A) | | | 4000 | 5000 | 6300 |
|---|---|---|---|---|---|
| Model | | | AE4000-SW | AE5000-SW | AE6300-SW |
| Image (Reference) | | | AE6300-SW (Drawout type) ●See the catalog of Mitsubishi Low Voltage Air Circuit Breakers, Y-0622, for the details. | | |
| Rated current (CT rating) In (A) | | | 4000 | 5000 | 6300 |
| Rated current setting Ir (A) (adjustable) (Rated ambient temperature 40°C) (For marine use 45°C) | | | 2000-2200-2400-2600-2800-3000-3200-3400-3600-3800-4000 | 2500-2750-3000-3250-3500-3750-4000-4250-4500-4750-5000 | 3150-3465-3780-4095-4410-4725-5040-5355-5670-5985-6300 |
| Number of poles | | | 3, 4 (HN, FN) (*3) | | |
| Rated insulation voltage V | | | 1000 | | |
| Current carrying capacity of neutral pole A | | | 2000 (4000) (*4) | 2500 (5000) (*4) | 3150 (6300) (*4) |
| Rated breaking capacity (kA symmetrical RMS) | IEC 60947-2, EN 60947-2 BS JIS C 8201-2-1 Ann.1 Ann.2 NK, LR, GL, BV, ABS | AC690V | 85 | | |
| | | AC600V | 85 | | |
| | | AC240-500V | 130 (*5) | | |
| | Ics = % Icu | | 100% | | |
| Rated short-time withstand current (kA symmetrical RMS) | | 1 second | 100 | | |
| Suitability for isolation | | | Compatible | | |
| Reverse connection | | | Possible | | |
| Number of operating cycles | | Without current | 10000 (3P) /5000 (4P) | | |
| | | With current (690 V AC) | 1000 | | |
| Outline dimension (mm) Height (H) x width (W) x depth (D) | Fixed type | 3-pole product | 414×873×290 | | |
| | | 4-pole product | 414×1003×290 | | |
| | Drawout type | 3-pole product | 480×875×368 | | |
| | | 4-pole product | 480×1005×368 | | |
| Weight (kg) (without Accessory) | Fixed type | 3-pole product | 160 | 160 | 160 |
| | | 4-pole product | 180 | 180 | 180 |
| | Drawout type | 3-pole product | 233 | 233 | 240 |
| | | 4-pole product | 256 | 256 | 263 |
| | Cradle only | 3-pole product | 118 | 118 | 125 |
| | | 4-pole product | 133 | 133 | 140 |
| CE Marking | | | Self-declaration | | |
| CCC recognition (☆ Certified) | | | ☆ | | |
| Marine approval | | | ☆Certified (NK, LR, GL, BV, ABS) | | |
| Automatic tripping device | | | Electronic (effective value detection) | | |

## Electronic trip relay (ETR) Type code

□□□ – □

**● Main setting module**

| | |
|---|---|
| WS1, WB1, WM1, WF1 | AE630-1600-SW, AE2000-3200-SW, AE4000-SW |
| WS2, WB2, WM2, WF2 | AE2000-SWA, AE4000-SWA, AE5000-SW |
| WS3,WB3,WM3, WF3 | AE6300-SW |

WS : General use
WM: Generator protection use
WB : INST/MCR only
WF : Protective coordination use

**● Optional setting module**

G1: Ground fault protection
N5: Neutral pole 50% protection
E1: Earth leakage protection
AP: 2nd Additional Pre-alarm
NA: Without optional setting

**● ETR Auxiliary Equipment**

☐ Temperature alarm(TAL)
☐ MCR switch(MCR-SW)

**● Power supply**

P1: AC·DC100-240V
P2: DC24-60V
P3: AC100-240V / DC100-125V with output contact
P4: DC24-60V with output contact
P5: DC100-240V with output contact (SSR)

**Additional function**

☐ Extension module(EX1)
- ☐ Display(DP1)
- ☐ Display onto panel board(DP2)
- ☐ VT unit(VT)

**Network**

☐ BIF-CC
☐ BIF-PR
☐ BIF-MD

Wire system (when EX1 is specified)

EX1
- ☐3ϕ3W
- ☐3ϕ4W
- ☐Normal connection
- ☐Reverse connection

Normal connection: Upper terminal is connected to power supply.
Reverse connection: Lower terminal is connected to power supply.

*The display is optional.

For the details of the characteristics, alarm contact output and expanded functions of the ETR, see the catalog of Mitsubishi Low Voltage Air Circuit Breakers, Y-0622.

## Earth Leakage Relays

| Model | | Interchangeable leakage relays (*1) | | | | | |
|---|---|---|---|---|---|---|---|
| | | Electrical self-hold type | | Mechanical self-hold type | | Harmonic surge ready Electrical self-hold type | Harmonic surge ready Mechanical self-hold type |
| | Hole diameter mm | NV-ZBA | | NV-ZSA | | NV-ZHA | NV-ZLA |
| Model name of ZCT combined (*5) | 15 | ZT15B | – | ZT15B | – | ZT15B | ZT15B |
| | 30 | ZT30B | – | ZT30B | – | ZT30B | ZT30B |
| | 40 | ZT40B | – | ZT40B | – | ZT40B | ZT40B |
| | 60 | – | ZT60B | – | ZT60B | ZT60B | ZT60B |
| | 80 | – | ZT80B | – | ZT80B | ZT80B | ZT80B |
| | 100 | – | ZT100B | – | ZT100B | ZT100B | ZT100B |
| Image | | | | | | | |
| | | | | | | | |
| Phase line type | | 3ϕ4W, 3ϕ3W, 1ϕ3W, 1ϕ2W | | | | | |
| Control voltage AC V | JIS | 120 • 240 selectable | | 120 • 240 selectable<br>240 • 415 selectable | | – | – |
| | UL/JIS (*2)<br>UL/CE (*3) | – | | – | | 120 • 240 selectable<br>240 • 440 selectable | 120 • 240 selectable<br>240 • 440 selectable<br>480 |
| JIS High speed type | Rated sensitivity current mA | 30<br>100 • 200 • 500 selectable | 100 • 200 • 500 selectable | 30<br>100 • 200 • 500 selectable | 100 • 200 • 500 selectable | – | – |
| JIS High speed type | Max. operating time (s) | 0.1 | | 0.1 | | | |
| JIS Delay type | Rated sensitivity current mA | 100 • 200 • 500 selectable | | 100 • 200 • 500 selectable<br>(200 • 500 • 1000 selectable) | | | |
| JIS Delay type | Operating time (s) (*4) | 0.3 • 0.8 • 1.6 selectable | | 0.3 • 0.8 • 1.6 selectable | | | |
| JIS Delay type | Inertial non-operating time (s) or longer than (s) | 0.1 • 0.5 • 1.1 | | 0.1 • 0.5 • 1.1 | | | |
| UL/JIS High speed type | Rated sensitivity current mA | – | | – | | 30 50 | 30 50 |
| UL/JIS High speed type | Max. operating time (s) | | | | | 0.1 | 0.1 |
| UL/JIS High speed • Delay type | Rated sensitivity current mA | | | | | 100 • 200 • 500 selectable | 100 • 200 • 500 selectable |
| UL/JIS High speed • Delay type | Max. operating time (s) (*4) | | | | | 0.1 • 0.45 • 1.0 selectable | 0.1 • 0.45 • 1.0 selectable |
| UL/JIS High speed • Delay type | Inertial non-operating time (s) or longer than (s) | | | | | – • 0.1 • 0.5 | – • 0.1 • 0.5 |
| UL/CE High speed type | Rated sensitivity current mA | – | | – | | 30 • 50 • 100 selectable | 30 • 50 • 100 selectable |
| UL/CE High speed type | Max. operating time (s) at 5IΔn | | | | | 0.04 | 0.04 |
| UL/CE Delay type | Rated sensitivity current mA | | | | | 100 • 300 • 500 selectable<br>300 • 500 • 1000 selectable | 100 • 300 • 500 selectable<br>300 • 500 • 1000 selectable |
| UL/CE Delay type | Max. operating time (s) at 2IΔn (*4) | | | | | 0.45 • 1.0 selectable | 0.45 • 1.0 selectable |
| UL/CE Delay type | Inertial non-operating time (s) at 2IΔn | | | | | 0.1 • 0.5 | 0.1 • 0.5 |
| Earth leakage indication | | Electric type (LED) | | Mechanical type (button) | | Electric type (LED) | Mechanical type (button) |
| Resetting method | | Push button or control power switch off | | Push button<br>(conbined with earth leakage indicator) | | Push button or control power switch off | Push button<br>(conbined with earth leakage indicator) |
| Built-in contact | Configuration | 1c | | 1a1c | | 1a1c | 1a1c |
| Built-in contact | Continuous current capacity A | 5 | | 5 | | 5 | 5 |
| Built-in contact | Contact capacity A | | cosϕ=1 / cosϕ=0.4 L/R=0.007<br>120VAC 5 2<br>240VAC 5 2<br>24VDC 5 2 | | cosϕ=1 / cosϕ=0.4 L/R=0.007<br>120VAC 5 3<br>240VAC 3 2<br>415VAC 2 1<br>30VDC 4 3<br>100VDC 0.4 0.4<br>200VDC 0.2 0.2 | | cosϕ=1 / cosϕ=0.4 L/R=0.007<br>120VAC 5 2<br>240VAC 5 2<br>24VDC 5 2<br>Use auxiliary relay for AC415V contact. | cosϕ=1 / cosϕ=0.4 L/R=0.007<br>120VAC 5 3<br>240VAC 3 2<br>480VAC 1 1<br>30VDC 3 3 |
| Connection | Front | ●Clamp terminal | | ●Clamp terminal | | ●Clamp terminal | ●Clamp terminal |
| Connection | Rear | – | | ●Clamp terminal | | ●Clamp terminal | ●Clamp terminal |
| Standard attachment (Front connection) | | Mounting screw | | | | | |
| Mass kg | Relay | 0.3 | | 0.4 | | 0.4 | 0.4 |
| External accessories | Terminal cover | ● (TC-ZBA) | | ● (TC-ZSA) | | ● (TC-ZSA) (*6) | ● (TC-ZSA) (*6) |
| External accessories | Mounting hook for IEC 35mm rail (DIN rail) Fixture | ● (DIN-ZBA) | | – | | – | – |
| Max. consumption VA | | 3 | | | | | |
| Conforming standard | US UL standard (UR certified) | – | | – | | UL1053<br>Recognized component<br>(File No.E196562) | UL1053<br>Recognized component<br>(File No.E196562) |
| Conforming standard | Canada CSA standard | – | | – | | LR103083(Certified No.) | LR103083(Certified No.) |
| Conforming standard | European CE marking | – | | – | | Declaration for conformity<br>IEC 60947-2 AnnexB<br>EN 60947-2 AnnexB | Declaration for conformity<br>IEC 60947-2 AnnexB<br>EN 60947-2 AnnexB |

Notes:
- *1 Interchangeable leakage relays can be easily combined with other relays and our ZCT. However, products with 30mA sensitivity (excluding NV-ZHA/ZLA) can only be used in combination with ZT15B, ZT30B and ZT40B.
- *2 Indicates the UL-standard control voltage. UL, CSA and JIS standards are indicated together. For JIS voltage indications, 100-200V changeover is 120-240V changeover, 200-415V changeover is 240-440V changeover, and 460V and 480V are described together. When ordering, specify "UL/JIS".
- *3 Indicates the UL-standard control voltage. UL, CSA and CE standards are indicated together. For CE voltage indications, 120-230V changeover is 120-240V changeover, 230-440V changeoever is 240-440V selectable, which are described together. When ordering, specify "UL/CE".
- *4 When operating times are 0.3 and 0.45sec, 0.8 and 1.0sec and 1.6sec, the relay operates between 0.15 and 0.45sec, 0.6 and 1.0sec and 1.2 and 2.0sec, respectively.
- *5 Can be combined with an interchangeable ZCT equipped with a primary conductor. Refer to the next page for details.
- *6 Not UL-certified.

Remarks:
1. Relays with rates shown in parentheses are special-order.
2. The relay complies with CE marking conformity declaration only when used with CE marking type MITSUBISHI MCCB with a voltage tripping device to interrupt current during ground fault.
3. NV-ZBA/ZSA

| Control voltage | Available voltage range | Example of applicable circuit voltage |
|---|---|---|
| 120V | 80-126V | 100 • 110V • 120V |
| 240V | 160-252V | 200 • 220 • 240V |
| 415V | 320-484V | 400 • 415 • 440V |

4. NV-ZHA/ZLA

| Control voltage | Available voltage range | Example of applicable circuit voltage |
|---|---|---|
| 120V | 80-132V | 100 • 110 • 120V |
| 240V | 160-264V | 200 • 220 • 230 • 240V |
| 440V | 304-484V | 380 • 400 • 415 • 440V |
| 480V | 368-528V | 460 • 480V |

## Interchangeable ZCT

| Type | | ZT15B | ZT30B | ZT40B | ZT60B | ZT80B | ZT100B |
|---|---|---|---|---|---|---|---|
| Aperture diameter (mm) | | 15 | 30 | 40 | 60 | 80 | 100 |
| Mass (kg) | | 0.2 | 0.4 | 0.6 | 2.0 | 2.6 | 3.3 |
| Rated short time current | | 50 (peak value) | | | | | |
| Dimensions (mm) | a | 48 | 68 | 85 | 140 | 160 | 185 |
| 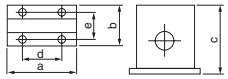 | b | 52 | 52 | 52 | 90 | 90 | 90 |
| | c | 70 | 90 | 100 | 150 | 169 | 190 |
| | d | 25 | 50 | 50 | 100 | 100 | 100 |
| | e | 40 | 40 | 40 | 70 | 70 | 70 |

## ZCT aperture diameter and wire size

| | ZCT aperture diameter (mm) | 15 | 30 | 40 | 60 | 80 | 100 |
|---|---|---|---|---|---|---|---|
| | | Max. 600V rated wire size in mm$^2$ (current in amperes) | | | | | |
| 1$\phi$2w | Polyvinyl-chloride insulated wire | 14 (88) | 60 (217) | 150 (395) | 325 (650) | 600 (992) | 800 (1185) |
| | Cross-linked polyethylene insulated cable | 2 (33) | 38 (190) | 60 (260) | 250 (655) | 400 (870) | 600 (1140) |
| 1$\phi$3w<br>3$\phi$3w | Polyvinyl-chloride insulated wire | 8 (61) | 38 (162) | 100 (298) | 250 (556) | 500 (842) | 725 (1095) |
| | Cross-linked polyethylene insulated cable | 2 (33) | 22 (135) | 60 (260) | 200 (560) | 325 (760) | 600 (1140) |
| 3$\phi$4w | Polyvinyl-chloride insulated wire | 8 (61) | 38 (162) | 100 (298) | 150 (395) | 325 (650) | 600 (992) |
| | Cross-linked polyethylene insulated cable | – | 14 (105) | 38 (190) | 100 (365) | 250 (655) | 400 (870) |

## Interchangeable ZCTs with primary conductors

| Type | | ZTA600A | ZTA1200A | ZTA2000A |
|---|---|---|---|---|
| Number of poles | | 3 | | |
| Rated voltage (VAC) | | 600 | | |
| Rated short time current (kA) | | 100 (peak value) | | |
| 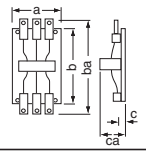 | a | 227 | 227 | 360 |
| | b | 256 | 298 | 250 |
| | ba | 366 | 444 | 594 |
| | c | 42 | 78 | 79 |
| | ca | 125 | 176 | 214 |

## ELRs with a ZCT with primary conductors

| Frame (A) | | 600 | 1200 | 2000 | 3200 |
|---|---|---|---|---|---|
| Type | ZBA | Interchangeable ELR and interchangeable ZCTs with primary conductors | | | NV-ZBA3200 |
| | ZSA | | | | NV-ZSA3200 |
| | ZHA | | | | NV-ZHA3200 |
| | ZLA | | | | NV-ZLA3200 |
| Number of poles | | 3 | | | |
| Rated voltage (VAC) | | 600 | | | |
| Rated short time current (kA) | | 100 (peak value) | | | |
| 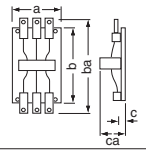 | a | 227 | 227 | 360 | 490 |
| | b | 256 | 298 | 250 | 320 |
| | ba | 366 | 444 | 594 | 868 |
| | c | 42 | 78 | 79 | 111 |
| | ca | 125 | 176 | 214 | 290 |
| Mass (kg) | | 6.5 | 11 | 27 | 54 |

| | | | Control voltage (VAC) | Rated current sensitivity (mA) | Max. operating time (s) | Inertial non-operating time (s) |
|---|---|---|---|---|---|---|
| Specification of ELRs | High-speed type | ZBA | 120 • 240 (*1) | 100 • 200 • 500 (*1) | 0.1 | — |
| | | ZSA | 120 • 240 (*1)<br>240 • 415 (*1) | 100 • 200 • 500 (*1) | | |
| | Time-delay type (High-speed • Time-delay type) | ZBA | 120 • 240 (*1) | 100 • 200 • 500 (*1) | 0.3 • 0.8 • 1.6 (*1) | 0.1 • 0.5 • 1.1 |
| | | ZSA | 120 • 240 (*1)<br>240 • 415 (*1) | 100 • 200 • 500 (*1)<br>(200 • 500 • 1000 (*1)) | 0.3 • 0.8 • 1.6 (*1) | 0.1 • 0.5 • 1.1 |
| | | ZHA | 120 • 240 (*1)<br>240 • 440 (*1) | 100 • 200 • 500 (*1) | 0.1 • 0.45 • 1.0 (*1) | – • 0.1 • 0.5 |
| | | | | 100 • 300 • 500 (*1)<br>300 • 500 • 1000 (*1) | 0.45 • 1.0 (*1) (at 2I$\Delta$n) | 0.1 • 0.5 (at 2I$\Delta$n) |
| | | ZLA | 120 • 240 (*1)<br>240 • 440 (*1)<br>480 | 100 • 200 • 500 (*1) | 0.1 • 0.45 • 1.0 (*1) | – • 0.1 • 0.5 |
| | | | | 100 • 300 • 500 (*1)<br>300 • 500 • 1000 (*1) | 0.45 • 1.0 (*1) (at 2I$\Delta$n) | 0.1 • 0.5 (at 2I$\Delta$n) |

Note: *1 Selectable.

# MEMO

# 3

# Special-purpose Breakers

1) Mag Only (Instantaneous Tripping Circuit Breakers) ..... 60
2) DC MCCBs and DSN Switches ..... 60
3) 400Hz MCCBs ..... 60

# 1. Mag Only (Instantaneous Tripping Circuit Breakers)

| | | | |
|---|---|---|---|
| Fixed | NF63-CV/SV/HV | AC, DC | Rated current x 10 (AC) (DC) |
| | NF125-CV/SV/HV | AC, DC | |
| | NF250-CV/SV/HV | AC, DC | |
| | NF400-CW/SW<br>NF630-CW/SW | AC, DC | |
| Adjustable | NF800-SEW | AC | High: Rated current x 10<br>Low: Rated current x 2 |
| | NF800-SDW | DC | High: 8000A Low: 3200A |
| | NF1000-SEW<br>NF1250-SEW | AC | High: Rated current x 10<br>Low: Rated current x 2 |
| | NF1600-SEW | AC | High: Rated current x 10<br>Low: Rated current x 2 |
| | NF1250-SDW<br>NF1600-SDW | DC | High: 8000A<br>Low: 3200A |

Remarks: 1. The size, weight, accessories, etc., are all identical to the same-designation C, S and H series breakers.
2. For more details, contact your dealer.

# 2. DC MCCBs and DSN Switches

Breaking is more difficult with direct currents because the current value never reaches zero. While ordinary DC breakers are suitable for low voltages, special-voltage DC breakers are recommended for voltages in excess of 250VDC. Breakers for 550V are all 4-pole models.
The size, shape, drilling plan, accessories, etc., are all identical to the S Series breakers with the same designations.

Wiring diagram for DC usage.

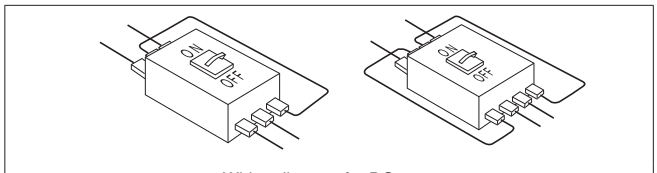


Wiring diagram for DC use.

Remark: 1. The tripping characteristics will change if the wiring differs from the one shown here.

| Model | NF63-SV | | NF125-SV | | NF250-SV | | NF400-SW | | NF630-SW | | NF800-SDW | | NF1250-SDW | | NF1600-SDW | |
|---|---|---|---|---|---|---|---|---|---|---|---|---|---|---|---|---|
| Number of poles | 3 | 4 | 3 | 4 | 3 | 4 | 3 | 4 | 3 | 4 | 3 | 4 | 3 | 4 | 3 | 4 |
| Rated voltage (VDC) | 400 | 550 | 440 | 550 | 500 | 600 | 500 | 600 | 500 | 600 | 500 | 600 | 500 | 600 | 500 | 600 |
| Rated breaking capacity (kA) IEC 60947-2 (Icu/Ics) | 2/2 | | 10/10 | | 20/20 | | 40/40 | | 40/40 | | 40/40 | | 40/20 | | 40/20 | |

Remark: 1. Time constant: 10ms or below.

### ●DC side

These breakers are designed as thyristor-Leonard system DC side breakers. They protect the thyristor from short circuiting when there is a power or communication failure (Mag Only breakers can also be used for this purpose). Use these breakers in combination with fast fuses for even greater protection.

| Model | NF125-SV | | NF250-SV | | NF400-SW | | NF630-SW | | NF800-SDW | | NF1250-SDW | | NF1600-SDW | |
|---|---|---|---|---|---|---|---|---|---|---|---|---|---|---|
| Number of poles | 2 | 3 | 2 | 3 | 2 | 3 | 2 | 3 | 2 | 3 | 2 | 3 | 2 | 3 |
| Rated voltage (VDC) | 250 | 440 | 300 | 500 | 250 | 480 | 250 | 480 | 250 | 480 | 250 | 480 | 250 | 480 |
| Rated breaking capacity (kA) IEC 60947-2 (Icu/Ics) | 40/40 | 10/10 | 20/20 | | 20/20 | | 20/20 | | 20/20 | | 20/20 | | 20/20 | |
| Instantaneous trip current min.) | 3 times rated current | | 3 times rated current | | 900A | | 1000A | | 1400A | | 2500A | | 3200A | |

### ●DSN switches

These are standard MCCBs without the automatic tripping element. The tripping capacity is about six times the rated current.

The appearance, size, drilling plan and available accessories are all identical to similar standard S and C Series MCCBs.

| Model | DSN63-CV | | DSN125-CV | | DSN250-CV | | DSN400-CW | | DSN630-CW | DSN800-CW |
|---|---|---|---|---|---|---|---|---|---|---|
| Rated current (A) | 63 | | 125 | | 250 | | 400 | | 630 | 800 |
| Number of poles | 2 | 3 | 2 | 3 | 2 | 3 | 2 | 3 | 3 | 3 |
| Rated voltage (AC/DC) | 500/250 | | 500/250 | | 500/250 | | 600/250 | | 600/250 | 600/250 |
| Max. switching current (AC/DC) | 378/155 | | 750/310 | | 1500/625 | | 2400/1000 | | 3780/1575 | 4800/2000 |

| Model | DSN32-SV | | DSN63-SV | | DSN125-SV | | DSN125-SGV | | DSN160-SGV | | DSN250-SV | | DSN250-SGV | | DSN400-SW | | DSN630-SW | | DSN800-SW | | DSN1000-SW | | DSN1250-SW | | DSN1600-SW | |
|---|---|---|---|---|---|---|---|---|---|---|---|---|---|---|---|---|---|---|---|---|---|---|---|---|---|---|
| Rated current (A) | 32 | | 63 | | 125 | | 125 | | 160 | | 250 | | 250 | | 400 | | 630 | | 800 | | 1000 | | 1250 | | 1600 | |
| Number of poles | 2 | 3 | 2 | 3 | 2 | 3 | 4 | 2 | 3 | 4 | 2 | 3 | 4 | 2 | 3 | 4 | 2 | 3 | 4 | 3 | 4 | 3 | 4 | 3 | 4 | 3 | 4 |
| Rated voltage (AC/DC) | 500/250 | | 500/250 | | 690/250 | | | 690/300 | | | 690/300 | | 690/250 | | 690/300 | | 690/250 | | 690/250 | | 690/250 | | 690/250 | | 690/250 | |
| Max. switching current (AC/DC) | 192/80 | | 378/155 | | 750/310 | | | 750/315 | | | 960/400 | | 1500/625 | | 1500/625 | | 2400/1000 | | 3780/1575 | | 4800/2000 | | 6000/2500 | | 7500/3125 | | 9600/4000 |

# 3. 400Hz MCCBs

Standard MCCBs cannot be used in 400Hz circuits. When standard MCCBs are used in high-frequency circuits (eq. 400Hz), the instantaneous characteristics are shifted higher. The 400Hz MCCB is recommended for use in 400Hz circuits.

### ●Specifications

The appearance, size, rated interrupting capacity, drilling plan, accessories, etc., are all identical to the standard S and H Series breakers of the same designation.

| Model | | NF125-SV | | | NF125-HV | | | NF250-SV | | | NF250-HV | | | NF400-SW | | | NF400-SEW | | NF630-SW (*1) | | NF630-SEW | | NF800-SEW | | NF1250-SEW | | NF1600-SEW | |
|---|---|---|---|---|---|---|---|---|---|---|---|---|---|---|---|---|---|---|---|---|---|---|---|---|---|---|---|---|---|
| Rated current (A) | | 16, 20, 32, 40, 50, 63, 80, 100 | | | 16, 20, 32, 40, 50, 63, 80, 100 | | | 125, 150 175, 200 | | | 125, 150 175, 200 | | | 225, 250 300, 350 | | | 200-350 adjustable | | 400, 500 | | 300-500 adjustable | | 400-600 adjustable | | 600-800 adjustable | | 800-1200 adjustable | |
| Number of poles | | 2 | 3 | 4 | 2 | 3 | 4 | 2 | 3 | 4 | 2 | 3 | 4 | 2 | 3 | 4 | 3 | 4 | 3 | 4 | 3 | 4 | 3 | 4 | 3 | 4 | 3 | 4 |
| Rated insulation voltage (V) | | 690 | | | | | | | | | | | | | | | | | | | | | | | | | | | |
| Rated breaking capacity (kA) IEC 60947-2 (Icu/Ics) | 690V | 8/8 | | | 10/8 | | | 8/8 | | | 10/8 | | | 10/10 | | | 10/10 | | 10/10 | | 10/10 | | 10/10 | | 25/13 | | 25/13 | |
| | 500V | 18/18 | | | 30/23 | | | 30/30 | | | 50/38 | | | 30/30 | | | 30/30 | | 30/30 | | 30/30 | | 30/30 | | 65/33 | | 65/33 | |
| | 440V | 25/25 | | | 50/38 | | | 36/36 | | | 65/65 | | | 42/42 | | | 42/42 | | 42/42 | | 42/42 | | 42/42 | | 85/43 | | 85/43 | |
| | 400V | 30/30 | | | 50/38 | | | 36/36 | | | 75/75 | | | 45/45 | | | 50/50 | | 50/50 | | 50/50 | | 50/50 | | 85/43 | | 85/43 | |
| | 230V | 50/50 | | | 100/75 | | | 85/85 | | | 100/100 | | | 85/85 | | | 85/85 | | 85/85 | | 85/85 | | 85/85 | | 125/63 | | 125/63 | |

Note: *1 Instantaneous trip current : Rated current x 14 (Fix)

# 4

# Selection


## 1 Construction and Operation 62

1) Construction of MCCB ..... 62
2) Construction of ELCB ..... 64

## 2 Selection of MCCB and ELCB 65

1) Selecting Procedure ..... 65
2) Features and Performance ..... 66
3) Current-carrying Capacity and Operating Temperature ..... 68
4) Application of Circuit Breaker According to Breaking Capacity ..... 70
5) Selection of Circuit Breaker for Electric Lamp or Heater Circuit ..... 71
6) Selection of Circuit Breaker for Motor Branch Circuit ..... 73
7) Selection of Motor Protection Breaker ..... 75
8) Selection of Circuit Breaker for Inverter Circuit ..... 76
9) Selection of Circuit Breaker for Transformer Primary Side ..... 77
10) Combination for Selective Breaking ..... 81
11) Combination for Cascade Breaking ..... 83
12) International Standard Conformance List ..... 85

## 3 Selection of ELCB 88

1) Electric Shock Protection ..... 88
2) ELCB Grounding Method ..... 89
3) Rated Voltage and Number of Poles ..... 90
4) Earth Fault Protection Coordination and Combination of Devices ..... 91

# 1. Construction of MCCB

**●Adjustable Instantaneous Tripping Current**

On electronic molded case circuit breakers, the instantaneous tripping current can be adjusted only by turning the knob. Therefore, optimum characteristics for load can be obtained.

Example of adjusting knob

**●Arc-Extinguishing Device**

Mitsubishi MCCBs feature excellent arc-extinguishing performance by virtue of the optimum combination of grid gap, shape, and material.

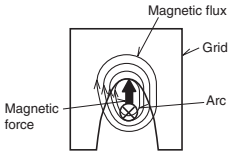

Arc extinction

**●Switching Mechanism**

The contacts open and close rapidly, regardless of the moving speed of the handle, minimizing contact wear and ensuring safety.

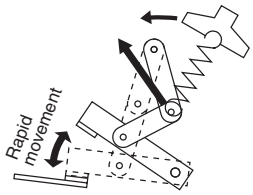

Link-mechanism operation

**●Trip Button (Push to Trip)**

Enables tripping mechanically from outside, for confirming the operation of the accessory switches and the manual resetting function.

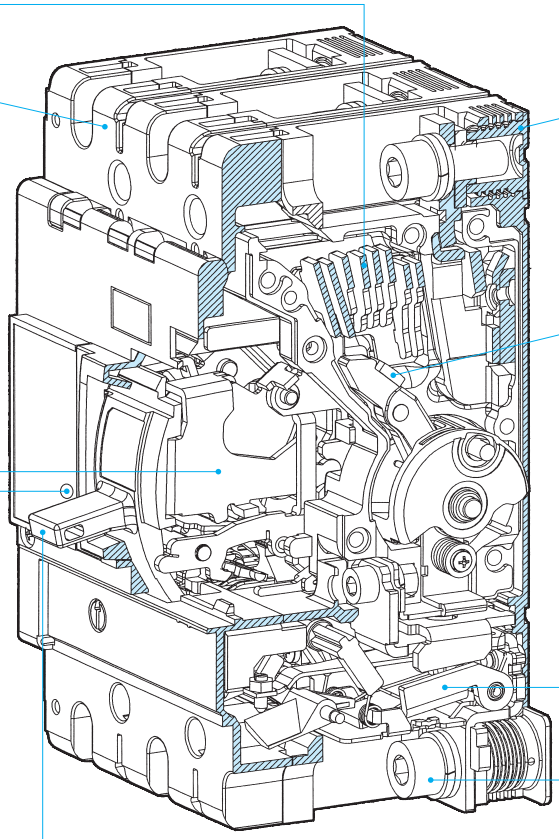

**Fig. 4.1 Construction**

**●Overcurrent Tripping Device**

Detects overcurrent and trips the circuit breaker.

**●Handle**

1. Trip indication
   The automatically tripped condition is indicated by the handle in the center position between ON and OFF, the yellow (or white) line cannot be seen in this position.
2. Resetting
   Resetting after tripping is performed by first moving the handle to the OFF position to engage the mechanism, then returning the handle to ON to reclose the circuit.
3. Trip-Free
   Even if the handle is held at ON, the breaker will trip if an overcurrent flows.

Handle indication

4. Contact On Mechanism
   Even in the worst case in which welding occurs owing to an overcurrent, the breaker will trip and the handle will maintain to ON, indicating the energizing state.

## 4-pole Breaker

- The 4-pole breaker is designed for 3-phase 4-wire circuits. A neutral pole without an overcurrent tripping element is provided at the right end. The construction and operation are the same as class S, H and U breakers. (Electronic molded case circuit breakers with frame size of 1600A or less have overcurrent tripping elements on the neutral poles.)
- Since the four poles are simultaneously opened and closed, the user will not fail in turning on the neutral pole or carelessly open the pole. (The standard construction is designed to close the neutral pole earlier and open it later than the voltage pole except for the construction with frame size of 2000A.)

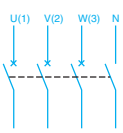

**Fig. 4.2 4-pole Breaker**

**(NF250-SV)**

# Automatic Tripping Devices

## Thermal-Magnetic Type

(NF32-SV, NF63-CV/SV/HV, NF125-CV/SV/HV, NF250-CV/SV/HV
NF400-CW/SW, NF630-CW/SW, NF800-SDW, etc.)

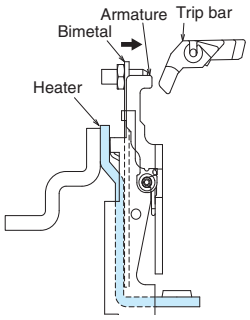


Fig. 4.3

1. Time-Delay Operation
   An overcurrent heats and warps the bimetal to actuate the trip bar.
2. Instantaneous Operation
   If the overcurrent is excessive, the amature is attracted and the trip bar actuated.

## Thermal-Magnetic Type (NF1250-SDW)

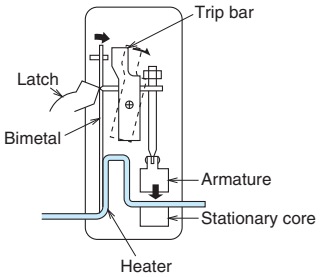


Fig. 4.4

1. Time-Delay Operation
   An overcurrent heats and warps the bimetal to actuate the trip bar.
2. Instantaneous Operation
   If the overcurrent is excessive, magnetization of the stationary core is strong enough to attract the armature and actuate the trip bar.

## Hydraulic-Magnetic Type (NF30-CS etc.)

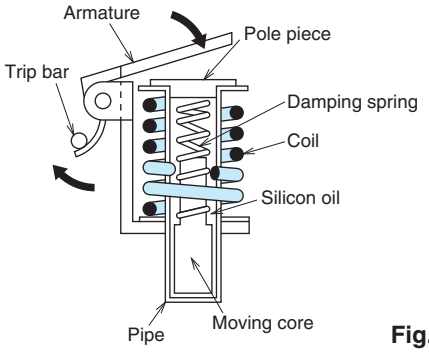


Fig. 4.5

1. Time-Delay Operation
   At an overcurrent flow, the magnetic force of the coil overcomes the spring, the core closes to the pole piece, attracts the armature, and actuates the trip bar.
   The delay is obtained by the viscosity of silicon oil.
2. Instantaneous Operation
   If the overcurrent is excessive, the armature is instantly attracted, without the influence of the moving core.

## Principle of Electronic Trip Relay (ETR) Operation

(NF125-SEV/HEV, NF250-SEV/HEV, etc.) (NF400-SEW~NF800-CEW
NF1000-SEW~NF1600-SEW, etc.)

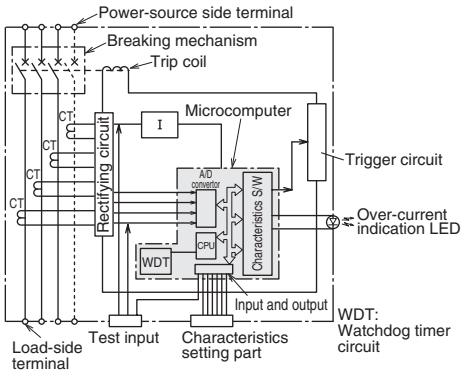


Fig. 4.6.1

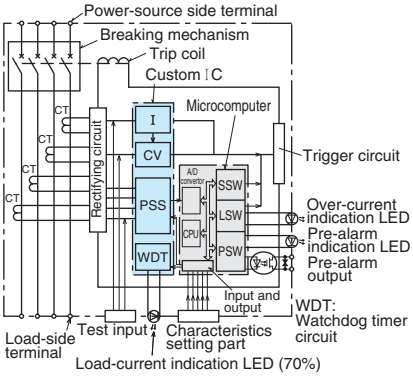


Fig. 4.6.2

1. The current flowing in each phase is monitored by a current transformer (CT).
2. Each phase of the transformed current undergoes full-phase rectification in the rectifier circuit.
3. After rectification, each of the currents are converted by a peak-conversion and an effective-value conversion circuit.
4. The largest phase is selected from the converted currents.
5. Each time-delay circuit generates a time delay corresponding to the largest phase.
6. The trigger circuit outputs a trigger signal.
7. The trip coil is excited, operating the switching mechanism.

## Number of tripping devices

Descriptions (e.g. 2P1E and 2P0E) are not given in the number of poles fields of some models. For these models, the same number of overcurrent tripping devices as the number of poles is provided in the circuit breakers.
2 poles: 2P2E, 3 poles: 3P3E, 4 poles: 4P4E or 4P3E
(Some 4-pole models do not have overcurrent tripping devices for the neutral poles.)

## 2. Construction of ELCB

**●Arc-Extinguishing Device**

Mitsubishi ELCBs feature excellent arc-extinguishing performance by virtue of the optimum combination of grid gap, shape, and material.

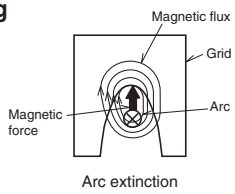


**●Trip Button (Push to Trip)**

Enables tripping mechanically from outside, for confirming the operation of the accessory switches and the manual resetting function.

**●Overcurrent Tripping Device**

The use of the proven mechanism of Mitsubishi ELCBs ensures reliable detection of overcurrent.

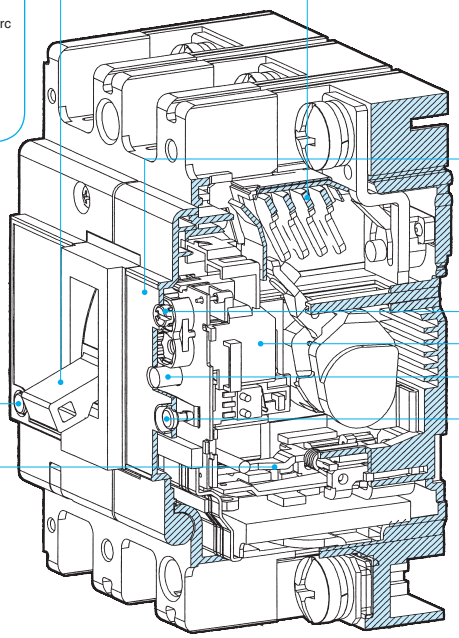

Fig. 4.7 Construction

**●Switching Mechanism**

The contacts open and close rapidly, regardless of the moving speed of the handle, minimizing contact wear and ensuring safety.

**●Window Frame**

Since the handle, trip button, test button, leakage display button and nameplate are located in one area, it is easy to cut the panel.

**●Sensitivity Switching Device**

The rated sensitivity current can be easily changed.
A 3-stage switching device for 100, 200 and 500 mA and a 2-stage switching device for 200 and 500 mA are available.

**●Leakage Display**

Target type with display button. The display is automatically reset by the handle.

**●Test Button**

The button has excellent durability and performance to withstand inspection at start.

**●Leakage Tripping Device**

- ●The semiconductor circuit unit, which is the most important part of the device, is an electronic type using highly reliable ICs.
- ●For improvement of the function for removing harmonic and surge components, two filters are provided to prevent unnecessary operations.
- ●The ZCT detects any minute current. It is covered with a magnetic shield and never operates unnecessarily owing to motor starting current.

| Rated operational voltage | Applicable circuit voltage | Available voltage range |
|---|---|---|
| 100-240V | 100/110/200/220/230/240V | 80 to 264V |
| 100-440V | 100/110/200/220/240/254/265/380/400/415/440V | 80 to 484V |
| 200-440V | 200/220/240/254/265/380/400/415/440V | 160 to 484V |
| 100-200-415V | 100/110/200/220/240/254/265/380/400/415/440V | 80 to 484V |
| 200-415V | 200/220/240/254/265/380/400/415/440V | 160 to 484V |

### ●Operation

1. When an earth fault occurs, voltage is induced on the secondary side of the ZCT.
2. Factors of unnecessary operations, i.e. surge and noise components, are removed from the induced voltage.
3. The signal level is discriminated, and, when the level exceeds the specified level, the electromagnetic device is excited to trip the circuit breaker body.

**Overload and short-circuit**

The use of the proven mechanism of Mitsubishi ELCBs ensures reliable detection of overcurrent and earth fault to break the circuit.

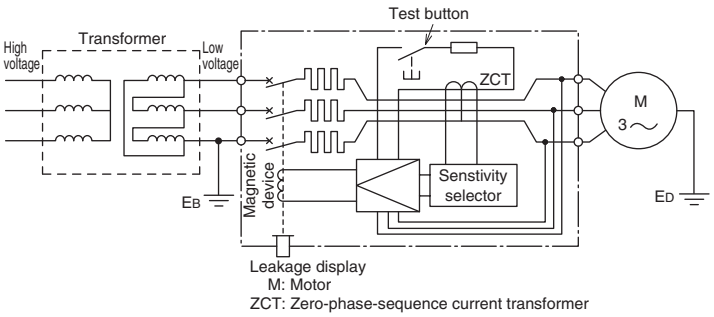


Fig. 4.8 Circuit configuration of ELCB (NV63-SV)

### Revision to EN and GB Standards

Products for European markets must conform to the CE Marking Directives. To affix the CE mark to a product, it is necessary that the product conforms to European Standard (EN Standard).
Products for China must conform to Chinese GB Standard to affix the CCC mark.
The third edition (2003) of EN Standard for circuit breakers, EN 60947-2, and GB Standard GB 14048.2 (2008) prescribe that the functions of earth leakage circuit breakers should normally work even in open phase condition. Products based on the previous EN Standard (second edition) have not been approved since June, 2006. Products based on the previous GB Standard (2001) have not been approved since January, 2011.

☆WS-V Series Earth Leakage Circuit Breakers (conforming to CE and CCC Standards) and UL 489 Listed Molded Case Circuit Breakers with earth leakage protection conform to the third edition of EN 60947-2 and GB 14048.2 2008 as 3-phase power supply earth leakage circuit breakers.

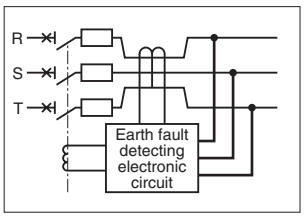


Fig. 4.9 Circuit diagram in 3-phase power supply ELCB

# 1. Selecting Procedure

## MCCB (NF)

| | | |
|---|---|---|
| **Circuit used Applicable standard** | Phase and wire type, voltage, DC or AC, frequency, standard | ●Applicable phase and wire type 2 poles: 1-phase 2-wire 3 poles: 1-phase 2-wire, 1-phase 3-wire, 3-phase 3-wire 4 poles: 3-phase 4-wire<br>●Specification list (pages 14 to 35)<br>●List of received certifications (page 86) |
| **Determination of rated current** | Kind and size of electric wire<br>Kind and working conditions of load<br>Selection conditions in internal standard and electrical equipment technical standards | ●Relationship between temperature and electric wire (page 68)<br>●Selection of circuit breaker for motor branch circuit (page 73)<br>●Selection of circuit breaker for electric lamp or electric heater circuit (page 71)<br>●Selection of motor protection breaker (page 75)<br>●Selection of circuit breaker for inverter circuit (page 76)<br>●Selection of circuit breaker on transformer primary side (page 77) |
| **Determination of interrupting capacity** | Transformer capacity<br>Electric wire thickness and length | ●Application based on breaking capacity (page 70)<br>●Table of combinations for cascade breaking (page 83) |
| **Examination of coordination** | Selective breaking | ●Operating characteristic curve (pages 142 to 218)<br>●Table of combinations for selective breaking (page 81) |
| **Determination of model** | Use | ●Circuit Breakers for special purpose (pages 60) |
| **Installation method** | Connection and molded case circuit breaker | ●Installation and connection (pages 94 to 102)<br>●Boxed Circuit Breakers (page 132) |
| **Accessories** | Internal accessories and external accessories<br>Electric operation | ●Internal accessories (pages 104 to 118)<br>●External accessories (pages 119 to 139)<br>●Electrical Operated Circuit Breakers (pages 135 to 137) |

## ELCB (NV)

| | | |
|---|---|---|
| **Circuit used Applicable standard** | Phase and wire type, voltage, DC or AC, frequency, standard | ●Specification list (pages 24 to 34)<br>●List of received certifications (page 86) |
| **Determination of rated current** | Kind and size of electric wire<br>Kind and working conditions of load<br>Selection conditions in internal standard and electrical equipment technical standards | ●Relationship between temperature and electric wire (page 68)<br>●Selection of circuit breaker for motor branch circuit (page 73)<br>●Selection of circuit breaker for electric lamp or electric heater circuit (page 71)<br>●Selection of circuit breaker for inverter circuit (page 76)<br>●Selection of circuit breaker on transformer primary side (page 77) |
| **Determination of interrupting capacity** | Transformer capacity<br>Electric wire thickness and length | ●Application based on breaking capacity (page 70)<br>●Table of combinations for cascade breaking (page 83) |
| **Determination of rated sensitivity current** | Purpose of protection<br>Obligation of installation | ●Purpose of protection (page 88)<br>●Selection of rated sensitivity current of circuit breaker for inverter circuit (page 76)<br>●Method of switching between rated voltage and rated sensitivity current (page 250) |
| **Examination of coordination** | Selective breaking<br>Ground fault protection coordination | ●Operating characteristic curve (pages 182 to 205)<br>●Table of combinations for selective breaking (page 81)<br>●Combinations of ground fault protection coordination and devices (page 91) |
| **Determination of model** | Use | ●Circuit Breakers for special purpose (pages 60) |
| **Installation method** | Connection and molded case circuit breaker | ●Installation and connection (pages 94 to 102) ●Boxed Circuit Breakers (page 132) |
| **Accessories** | Internal accessories and external accessories<br>Electric operation | ●Internal accessories (pages 104 to 118)<br>●External accessories (pages 119 to 139)<br>●Electrical Operated Circuit Breakers (pages 135 to 137) |

# 2. Features and Performance

## ■Features of MCCB

### ●Molded Case Circuit Breakers (NF)

①**Time-delay trip function**

This function conforms to the allowable current and time characteristics of electric wire and prevents operation caused by the staring current of a load device. When the overcurrent is large, the operating time is short, and when the overcurrent is small, the operating time is long.

**●In the case of electronic type**

The electronic time-delay trip function includes a long time limit trip function conforming to the allowable current and time characteristics of conductor and a short time limit trip function for selective breaking for branch NFB. The short time limit function operates after a delay of some cycles (0.06 to 0.3 s) at overcurrent exceeding the short time limit tripping current. These functions can be adjusted by the knob.

②**Instantaneous trip function**

This function breaks the circuit immediately when short-circuit current flows. A circuit breaker on which the instantaneous tripping current is adjustable has the advantage that coordination in operation with other protective devices, such as electromagnetic switches and low-voltage air circuit breakers, can be easily obtained. The instantaneous operating time (total interrupting time) can be divided as shown in Fig. 4-10.

③**Operating characteristic curve**

The operating characteristic curve indicates the relationship between magnitude of overcurrent and operating time. The maximum-minimum operating characteristic curve indicates that the operating time is in the range. Figs. 4-11 and 4-12 show examples of operating characteristic curves.

**Table 4-1 Overcurrent trip operating time (IEC 60947-2)**

| Rated current of circuit breaker (A) | Operating time for 130% current |
|---|---|
| 63 or less | Within 1 hr. |
| Over 63 | Within 2 hrs. |

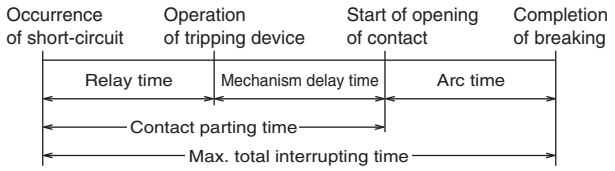


Since the relay time is normally 2 to 5 ms, if large current flows for more than this time, the circuit breaker operates instantaneously.

**Fig. 4.10 Instantaneous operating time**

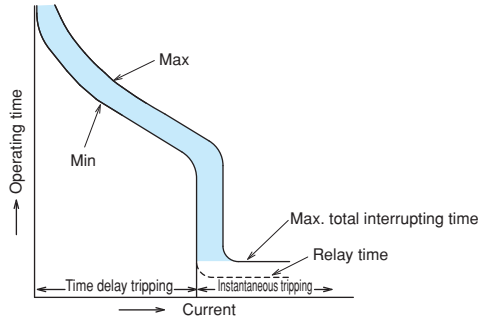


**Fig. 4.11 Example of operating characteristic curve**

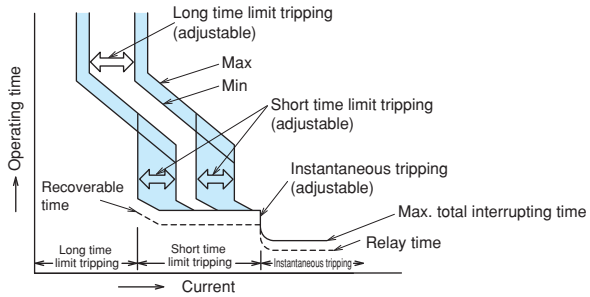


**Fig. 4.12 Example of operating characteristic curve of electronic type**

### ●Motor Protection Breakers

●The motor protection breakers are circuit breakers to be used to protect general induction motors. They prevent motors being burnt not only by short-circuit current of circuits, but also by overcurrent caused by overload operation and locking of motors.

●The Motor Protection Breakers are finely classified according to rated current so that the breakers can be applied to various types of motors.

●Although their time-delay trip and instantaneous trip functions are almost the same as those of MCCB, they are designed to operate within 2 seconds to 30 seconds at 600% of the rated current in consideration of protection from motor starting current and locked current.

●There are many kinds of motors, and the motors have various allowable characteristics for overcurrent. Therefore, when applying a motor breaker, it is necessary to compare the allowable characteristics and the operating characteristics of the motor breaker.
Note that, particularly, submersible motors may not be protected by ordinary motor breakers because their allowable locked time is short.

●When the motor starting current is large and the starting time is long and when the frequency of intermittent operation is high, motor breakers are unsuitable. In such a case, the use of a combination of an electromagnetic switch and MCCB (combination starter) is recommended.

## ●Characteristics of MCCB for DC circuits

When a 2-pole MCCB (250 V DC or less) is used on a DC circuit, connect the poles in series. When a 3- or 4-pole MCCB is used, refer to page 60 (for special DC voltage) or pages 14 to 21 (for DC).
If the breaker is not connected as specified, its tripping characteristics and breaking performance will change, and it cannot be used.

## ●Current-limiting characteristic

The current limiting refers to reduction of estimated short-circuit current depending on the circuit to prevent flow of the larger short-circuit current. The use of a class S, H or R which has excellent current-limiting characteristic or class U enables to reduce the passing energy at short-circuiting and protect the devices in the electric circuit from electromagnetic force and thermal stress.

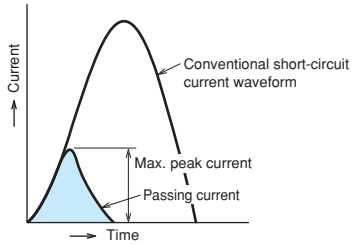


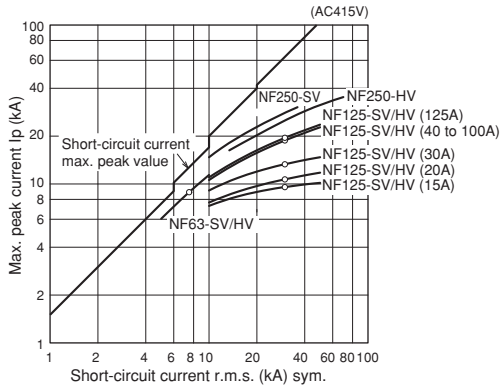


**Fig. 4.13**
Passing current peak value characteristic of classes S and H (415 VAC)

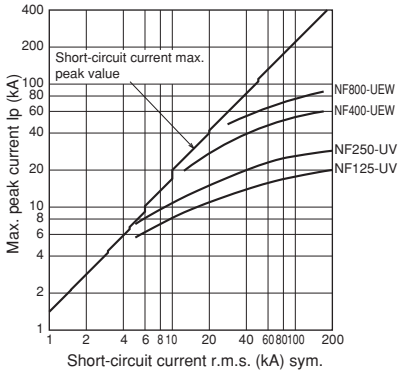


**Fig. 4.14**
Passing current peak value characteristic of classes U (415 VAC)

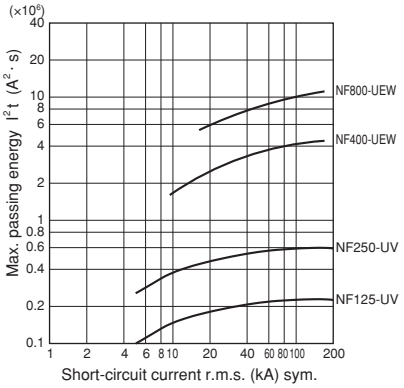


**Fig. 4.15**
Passing I²t characteristic of class U (415 VAC)

# ■Performance

## ●Short-circuit breaking performance

Short-circuit current corresponding to the rated interrupting capacity is interrupted.

**●Outline of short-circuit test (IEC 60947-2)**

①Rated limit short-circuit interrupting capacity (Icu)
Operating duty: O – 3 min – CO

②Rated service short-circuit interrupting capacity (Ics)
Operating duty: O – 3 min – CO – 3 min – CO
Upper limit of temperature rise of terminal after breaking: 80K or less
O duty: The circuit breaker in the ON status carries and interrupts short-circuit current.
CO duty: A shorted circuit is formed, and the circuit breaker is turned on to carry and interrupt short-circuit current.

## ●Opening/closing performance

Table 4-2 shows the durability against opening and closing. See the durability against opening and closing as reference when using a circuit breaker as a switchgear.
The durability against tripping by SHT (shunt tripping device), UVT (undervoltage tripping device) and trip button is 10% of the total durability against opening and closing.
Note: Opening and closing operations are regarded as one time.
If a circuit breaker is regularly used to trip, the life of the circuit breaker will be significantly reduced.

**Table 4-2 Durability of MCCB against opening and closing (IEC 60947-2)**

| Rated current (A) | Frequency of opening and closing (times/hour) | Durability against opening and closing (times) | | |
|---|---|---|---|---|
| | | With current flow | Without current flow | Total |
| 100 or less | 120 | 1500 | 8500 | 10000 |
| 101 to 315 | 120 | 1000 | 7000 | 8000 |
| 316 to 630 | 60 | 1000 | 4000 | 5000 |
| 631 to 2500 | 20 | 500 | 2500 | 3000 |
| 2501 or more | 10 | 500 | 1500 | 2000 |

# 3. Current-carrying Capacity and Operating Temperature

## ■Operating current vs. ambient temperature

Rated current of circuit breakers is adjusted for the rated ambient temperature. This is because circuit breakers are often installed in a casing as a switchboard or a control board, and temperature of the installed place of the breaker becomes higher than ambient temperature of the wires. If temperature of the installation site of circuit breakers greatly differ from the rated ambient temperature, it is necessary to correct rated current according to the temperature correction curve (shown in the Paragraph of characteristics and outside shape in the catalog). Load current can be increased up to the rated current corrected according to ambient temperature.
However, set current rating with enough allowance while taking fluctuation of power voltage and load current into consideration so that maximum operating current may not exceed the rated current.

### (1) Cautionary instructions for using heat resistive wire

For using insulated wires of higher heat resistance than that of 600 V PVC insulated wire (allowable temperature 60°C), it is necessary to take the following points into consideration.
For circuit breakers, size of test wire is stipulated by each test current in IEC60947-1
If size of connection wire is thinner than the test wire size, temperature of the breaker terminals increases and overcurrent tripping operation characteristic may change in some cases. (Operating time becomes shorter usually.)
At motor load, for example, influence of change in operation characteristic by difference in size of connection wire is insignificant and can be disregarded because the load current is far lower than the rated current of the circuit breaker.

**Table 4-3 Size of test wire**

| Range of test current (A) | | | Conductor size ($mm^2$) |
|---|---|---|---|
| 0 | < | ≤ 8 | 1.0 |
| 8 | | 12 | 1.5 |
| 12 | | 15 | 2.5 |
| 15 | | 20 | 2.5 |
| 20 | | 25 | 4.0 |
| 25 | | 32 | 6.0 |
| 32 | | 50 | 10 |
| 50 | | 65 | 16 |
| 65 | | 85 | 25 |
| 85 | | 100 | 35 |
| 100 | | 115 | 35 |
| 115 | | 130 | 50 |
| 130 | | 115 | 50 |
| 150 | | 175 | 70 |
| 175 | | 200 | 95 |
| 200 | | 225 | 95 |
| 225 | | 250 | 120 |
| 250 | | 275 | 150 |
| 275 | | 300 | 185 |
| 300 | | 350 | 185 |
| 350 | | 400 | 240 |

## (2) Connection of aluminum conductors

- When aluminum conductors are connected, be careful to prevent the contact resistance (due to the oxidized film of aluminum) from being increased.
- The surface of the connection point of the aluminum conductors shall be properly treated by plating (zinc displacement-Copper-Silver) or by joint compound. If the treatment is done only by joint compound, reliability is low, this should be limited to when plating is impossible (eg. at site).
- For aluminum cables, use compression terminals that are exclusively for aluminum cables.
- The compression portion of the terminal shall be provided with taping, and the aluminum wire shall not be exposed to the atmosphere.

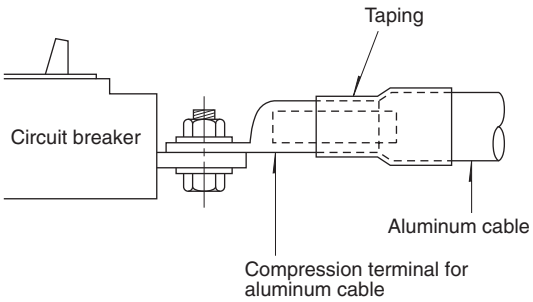


**Fig. 4.16 Example of connection of aluminum conductor**

## (3) Maximum operating current of installation without clearance between breakers

In case of installation without clearance between breakers, because malfunction failures can result by heat of breaker, use the operating current not to exceed the below value.

**Table 4-4**

| Model | | | | | | | | Maximum operating current |
|---|---|---|---|---|---|---|---|---|
| BH | BH-P | BH-S | BH-PS | | | | | 80% of rated current |
| CP30-BA | CP-B | CP-S | | | | | | |
| NF30-CS | | | | | | | | |
| NF32-SV | NF63-CV | | | NV32-SV | NV63-CV | | | |
| NF63-SV | NF63-HV | | | NV63-SV | NV63-HV | | | |
| NF125-CV | NF125-SGV | NF125-SEV | | NV125-CV | | | | |
| NF125-SV | NF125-LGV | NF125-HEV | | NV125-SV | | | | |
| NF125-HV | NF125-HGV | | | NV125-HV | | | | |
| NF125-RGV | | | | | | | | |
| NF160-SGV | NF160-LGV | NF160-HGV | | | | | | |
| NF250-CV | NF250-LGV | | | NV250-CV | | | | |
| NF250-SV | NF250-SGV | | | NV250-SV | NV250-SEV | | | |
| NF250-HV | NF250-HGV | NF250-RGV | | NV250-HV | NV250-HEV | | | |
| NF400-CW | NF400-SW | NF400-SEW | NF400-HEW | NV400-CW | NV400-SW | NV400-SEW | NV400-HEW | 90% of rated current |
| NF400-REW | NF400-UEW | | | NV400-REW | | | | |
| NF630-CW | NF630-SW | NF630-SEW | NF630-HEW | NV630-CW | NV630-SW | NV630-SEW | NV630-HEW | |
| NF630-REW | | | | | | | | |
| NF800-CEW | NF800-SDW | NF800-SEW | NF800-HEW | NV800-SEW | NV800-HEW | | | |
| NF800-REW | NF800-UEW | | | | | | | |

# 4. Application of Circuit Breaker According to Breaking Capacity

## ■MCCB (NF)

Class C, FAU Series / Classes S, H and R

(The correlation between transformers and interrupting capacities is intended for short-circuiting just under the secondary voltage of 3-phase standard transformer, 210 V or 420 V, or the voltage of single-phase 3-wire transformer, 210 V.)

### Table 4-5 230VAC

| 3ph trans. capacity (kVA) | 30 or less | 50 to 75 | 100 | 150 to 300 | 500 to 1500 | 2000 to 3000 |
|---|---|---|---|---|---|---|
| 1ph trans. capacity (kVA) | 20 or less | 30 to 50 | 75 | 100 to 150 | 200 to 300 | – |

Breaking capacity (kA) (sym): 2.5, 5, 7.5, 10, 15, 25, 30, 35, 36, 50, 85, 100, 125, 150, 170, 200

| Frame (A) | | | | | | | | | | | | | |
|---|---|---|---|---|---|---|---|---|---|---|---|---|---|
| 30 • 32 | NF30-CS<br>NF30-FAU (*1) | NF32-SV | | | | | | | | | | | |
| 50 • 60 • 63 | NF50-FAU (*1) | NF63-CV | NF63-SV | NF63-HV | | | | | | | | | |
| 100 • 125 | NF125-CV | | | | NF125-SV | | NF125-SEV | NF125-HEV<br>NF125-HV | NF125-RGV | NF125-UV | | | |
| 225 • 250 | NF250-CV | | | | | NF250-SV<br>NF250-SEV | | NF250-HV<br>NF250-HEV | NF250-RGV | NF250-UV | | | |
| 400 | NF400-CW | | | | | | NF400-SW/SEW | NF400-HEW | NF400-REW | NF400-UEW | | | |
| 600 • 630 | NF630-CW | | | | | | NF630-SW/SEW | NF630-HEW | NF630-REW | | | | |
| 800 | NF800-CEW | | | | | | NF800-SEW | NF800-HEW | NF800-REW | NF800-UEW | | | |
| 1000 to 4000 | NF1000-SEW~NF1600-SEW | | | | | | | | | | | | |

*1 The breaking capacity of NF30-FAU and NF50-FAU having a rated current of 5 A is 1.5 kA.

### Table 4-6 440VAC

| Trans. capacity (kVA) | 30 or less | 50 to 100 | 150 to 300 | 500 to 1000 | 1500 to 2000 | 2500 to 5000 |
|---|---|---|---|---|---|---|

Breaking capacity (kA) (sym): 1.5, 2.5, 7.5, 10, 15, 20, 25, 30, 35, 36, 50, 65, 85, 125, 200

| Frame (A) | | | | | | | | | | | | | |
|---|---|---|---|---|---|---|---|---|---|---|---|---|---|
| 30 • 32 | NF30-CS | NF32-SV | | | | | | | | | | | |
| 50 • 60 • 63 | NF63-CV | NF63-SV | NF63-HV | | | | | | | | | | |
| 100 • 125 | NF125-CV | | | NF125-SV | NF125-HV | | | | NF125-RV | NF125-UV | | | |
| 225 • 250 | NF250-CV | | | | NF250-SV<br>NF250-SEV | NF250-HV<br>NF250-HEV | | | NF250-RV | NF250-UV | | | |
| 400 | NF400-CW | | | | NF400-SW/SEW | | NF400-HEW | NF400-REW | NF400-UEW | | | | |
| 600 • 630 | NF630-CW | | | | | NF630-SW/SEW | NF630-HEW | NF630-REW | | | | | |
| 800 | NF800-CEW | | | | | NF800-SEW | NF800-HEW | NF800-REW | NF800-UEW | | | | |
| 1000 to 4000 | NF1000-SEW~NF1600-SEW | | | | | | | | | | | | |

## ■ELCB (NV)

Class C, FAU Series / Classes S, H and R

(The correlation between transformers and interrupting current is intended for short-circuiting just under the secondary voltage of 3-phase standard transformer, 210 V or 420 V, or the voltage of single-phase 3-wire transformer, 210 V.)

### Table 4-7 230VAC

| 3ph trans. capacity (kVA) | 30 or less | 50 to 75 | 100 | 150 to 300 | 500 to 1500 | 2000 to 3000 |
|---|---|---|---|---|---|---|
| 1ph trans. capacity (kVA) | 20 or less | 30 to 50 | 75 | 100 to 150 | 200 to 300 | – |

Breaking capacity (kA) (sym): 1.5, 2.5, 5, 7.5, 10, 15, 25, 30, 35, 36, 50, 85, 100, 125

| Frame (A) | | | | | | | | | | | | |
|---|---|---|---|---|---|---|---|---|---|---|---|---|
| 30 • 32 | NV30-FAU (*1) | NV32-SV | | | | | | | | | | |
| 50 • 60 • 63 | NV50-FAU (*1) | NV63-CV | NV63-SV | NV63-HV | | | | | | | | |
| 100 • 125 | NV125-CV | | | | NV125-SV | NV125-HV | | | | | | |
| 225 • 250 | NV250-CV | | | | | NV250-SV<br>NV250-SEV | NV250-HV<br>NV250-HEV | | | | | |
| 400 | NV400-CW | | | | | | NV400-SW/SEW | NV400-HEW | NV400-REW | | | |
| 600 • 630 | NV630-CW | | | | | | NV630-SW/SEW | NV630-HEW | | | | |
| 800 | NV800-SEW | | | | | | | NV800-HEW | | | | |

*1 The interrupting current of NF30-FAU and NF50-FAU having a rated current of 5 A is 1.5 kA.

### Table 4-8 440VAC

| Trans. capacity (kVA) | 30 or less | 50 to 100 | 150 to 300 | 500 to 1000 | 1500 to 2000 | 2500 to 5000 |
|---|---|---|---|---|---|---|

Breaking capacity (kA) (sym): 2.5, 5, 7.5, 10, 15, 25, 30, 35, 36, 50, 65, 70, 85, 125

| Frame (A) | | | | | | | | | | | | |
|---|---|---|---|---|---|---|---|---|---|---|---|---|
| 30 • 32 | NV32-SV | | | | | | | | | | | |
| 50 • 60 • 63 | NV63-CV | NV63-SV | NV63-HV | | | | | | | | | |
| 100 • 125 | NV125-CV | | | NV125-HV | | | | | | | | |
| | | | | NV125-SV | NV125-SEV | NV125-HEV | | | | | | |
| 225 • 250 | NV250-CV | | | | NV250-SV<br>NV250-SEV | NV250-HV<br>NV250-HEV | | | | | | |
| 400 | NV400-CW | | | | NV400-SW/SEW | | NV400-HEW | NV400-REW | | | | |
| 600 • 630 | NV630-CW | | | | | NV630-SW/SEW | NV630-HEW | | | | | |
| 800 | NV800-SEW | | | | | | NV800-HEW | | | | | |

In some lighting apparatuses, the service life of circuit breakers may be reduced by the influence of inrush current applied when the lamps are turned on. Periodically check for abnormal temperature rise of the circuit breaker in such an apparatus.

# 5. Selection of Circuit Breaker for Electric Lamp or Heater Circuit

The maximum working current is 0.8 times the rated current of each circuit breaker.

## ■MCCB (NF)

**Table 4-9 230VAC**

| Max. working current (A) | Rated current of circuit breaker (A) | Breaking capacity (kA) 230 V AC (Icu sym) | | | | | | | | | | | | | | |
|---|---|---|---|---|---|---|---|---|---|---|---|---|---|---|---|---|
| | | 2.5 | 5 | 7.5 | 10 | 15 | 25 | 30 | 36 | 50 | 85 | 100 | 125 | 150 | 170 | 200 |
| 12 | 15 | NF30-CS BH-P | BH-P (110/220V) | NF32-SV | NF63-SV | NF63-HV | NF125-SV | | | NF125-HV | | NF125-RGV | | NF125-UV | | |
| 16 | 20 | | | | | | | | | | | | | | | |
| 24 | 30 | | | | | | | | | | | | | | | |
| 32 | 40 | BH-P (110/220V) | | NF63-CV | | | | | | | | | | | | |
| 40 | 50 | | | | | | | | | | NF125-HV NF125-HEV | | | | | |
| 48 | 60 | NF125-CV | | | | | | NF125-SV NF125-SEV | | NF125-HV NF125-SEV | | | | | | |
| 60 | 75 | | | | | | | | | | | | | | | |
| 80 | 100 | | | | | | | | | | | | | | | |
| 100 | 125 | | | | | | | | | | | | | | | |
| 120 | 150 | NF250-CV | | | | | | | NF250-SV NF250-SEV | | NF250-HV NF250-HEV | NF250-RGV | | NF250-UV | | |
| 140 | 175 | | | | | | | | | | | | | | | |
| 160 | 200 | | | | | | | | | | | | | | | |
| 180 | 225 | | | | | | | | | | | | | | | |
| 200 | 250 | | | | | | | | | | | | | | | |
| 240 | 300 | NF400-CW | | | | | | | | NF400-SW NF400-SEW | NF400 -HEW | NF400-REW | | NF400 -UEW | | |
| 280 | 350 | | | | | | | | | | | | | | | |
| 320 | 400 | | | | | | | | | | | | | | | |
| 400 | 500 | NF630-CW | | | | | | | | NF630-SW NF630-SEW | NF630 -HEW | NF630-REW | | NF800 -UEW | | |
| 480 | 600 | | | | | | | | | | | | | | | |
| 560 | 700 | NF800-CEW | | | | | | | | NF800-SEW | NF800 -HEW | NF800-REW | | | | |
| 640 | 800 | | | | | | | | | | | | | | | |
| 800 | 1000 | NF1000-SEW | | | | | | | | | | | | | | |
| 960 | 1200 | NF1250-SEW | | | | | | | | | | | | | | |
| 1120 | 1400 | NF1600-SEW | | | | | | | | | | | | | | |
| 1280 | 1600 | | | | | | | | | | | | | | | |

**Table 4-10 440VAC**

| Max. working current (A) | Rated current of circuit breaker (A) | Breaking capacity (kA) 440 V AC (Icu sym) | | | | | | | | | | | | | | |
|---|---|---|---|---|---|---|---|---|---|---|---|---|---|---|---|---|
| | | 1.5 | 2.5 | 5 | 7.5 | 10 | 25 | 30 | 36 | 45 | 50 | 70 | 85 | 125 | 150 | 200 |
| 12 | 15 | NF30-CS | NF32-SV | NF32-SV | NF63-SV | NF63-HV | NF125-SV | NF125-SV | NF125-HV | | | NF125-RGV | | | NF 125-UV | |
| 16 | 20 | | | | | | | | | | | | | | | |
| 24 | 30 | | | | | | | | | | | | | | | |
| 32 | 40 | NF63-CV | | NF63-CV | | | | | | | | | | | | |
| 40 | 50 | | | | | | | | | | | | | | | |
| 48 | 60 | | | | | | | NF125-SV NF125-SEV | NF125-HV NF125-SEV | NF125-HV NF125-HEV | NF125-RGV NF125-HEV | | | | | |
| 60 | 75 | NF125-CV | | | | | | | | | | | | | | |
| 80 | 100 | | | | | | | | | | | | | | | |
| 100 | 125 | | | | | | | | | | | | | | | |
| 120 | 150 | NF250-CV | | | | | | NF250-SV NF250-SEV | | NF250-HV NF250-HEV | | NF250-RGV | | | NF 250-UV | |
| 140 | 175 | | | | | | | | | | | | | | | |
| 160 | 200 | | | | | | | | | | | | | | | |
| 180 | 225 | | | | | | | | | | | | | | | |
| 200 | 250 | | | | | | | | | | | | | | | |
| 240 | 300 | NF400-CW | | | | | | | NF400-SW | | NF400- HEW | NF400-REW | | | NF400-UEW | |
| 280 | 350 | | | | | | | | NF400-SEW | | | | | | | |
| 320 | 400 | | | | | | | | | | | | | | | |
| 400 | 500 | NF630-CW | | | | | | | NF630-SW NF630-SEW | | NF630- HEW | NF630-REW | | | NF800-UEW | |
| 480 | 600 | | | | | | | | | | | | | | | |
| 560 | 700 | NF800-CEW | | | | | | | NF800-SEW | | NF800- HEW | NF800-REW | | | | |
| 640 | 800 | | | | | | | | | | | | | | | |
| 800 | 1000 | NF1000-SEW | | | | | | | | | | | | | | |
| 960 | 1200 | NF1250-SEW | | | | | | | | | | | | | | |
| 1120 | 1400 | NF1600-SEW | | | | | | | | | | | | | | |
| 1280 | 1600 | | | | | | | | | | | | | | | |

## ■ELCB (NV)

**Table 4-11 230VAC**

| Max. working current (A) | Rated current (A) | Breaking capacity (kA) 230 V AC (Icu sym) | | | | | | | | | | | |
|---|---|---|---|---|---|---|---|---|---|---|---|---|---|
| | | 2.5 | 5 | 7.5 | 10 | 15 | 25 | 30 | 36 | 50 | 85 | 100 | 125 |
| 12 | 15 | NV32-SV | | NV32-SV | | NV63-HV | | | | NV125-HV | | | |
| 16 | 20 | | | | | | | | | | | | |
| 24 | 30 | | | | | | | | | | | | |
| 32 | 40 | NV63-CV | | NV63-SV | | | | | | | | | |
| 40 | 50 | | | | | | | | | NV125-HV NV125-SEV | NV125-HV NV125-HEV | | |
| 48 | 60 | | | | | | | | | | | | |
| 60 | 75 | NV125-CV | | | | | | NV125-SV | | | | | |
| 80 | 100 | | | | | | | | | | | | |
| 100 | 125 | | | | | | | | | | | | |
| 120 | 150 | NV250-CV | | | | | | | NV250-SV NV250-SEV | | NV250-HV NV250-HEV | | |
| 140 | 175 | | | | | | | | | | | | |
| 160 | 200 | | | | | | | | | | | | |
| 180 | 225 | | | | | | | | | | | | |
| 200 | 250 | | | | | | | | | | | | |
| 240 | 300 | NV400-CW | | | | | | | | NV400-SW NV400-SEW | NV400 -HEW | NV400 -REW | |
| 280 | 350 | | | | | | | | | | | | |
| 320 | 400 | | | | | | | | | | | | |
| 400 | 500 | NV630-CW | | | | | | | | NV630-SW NV630-SEW | NV630 -HEW | | |
| 480 | 600 | | | | | | | | | | | | |
| 560 | 700 | NV800-SEW | | | | | | | | | NV800 -HEW | | |
| 640 | 800 | | | | | | | | | | | | |

**Table 4-12 440VAC**

| Max. working current (A) | Rated current (A) | Breaking capacity (kA) 440 V AC (Icu sym) | | | | | | | | | | | |
|---|---|---|---|---|---|---|---|---|---|---|---|---|---|
| | | 2.5 | 5 | 7.5 | 10 | 25 | 30 | 36 | 45 | 50 | 70 | 85 | 125 |
| 12 | 15 | NV63-CV | NV32-SV | NV63-SV | NV63-HV | | NV125-SV | NV125-HV | | | | | |
| 16 | 20 | | | | | | | | | | | | |
| 24 | 30 | | | | | | | | | | | | |
| 32 | 40 | | NV63-CV | | | | | | | | | | |
| 40 | 50 | | | | | | NV125-SV NV125-SEV | NV125-HV NV125-SEV | NV125-HV NV125-HEV | NV125-HEV | | | |
| 48 | 60 | | NV125-CV | | | | | | | | | | |
| 60 | 75 | | | | | | | | | | | | |
| 80 | 100 | | | | | | | | | | | | |
| 100 | 125 | | | | | | | | | | | | |
| 120 | 150 | NV250-CV | | | | | NV250-SV NV250-SEV | | NV250-HV NV250-HEV | | | | |
| 140 | 175 | | | | | | | | | | | | |
| 160 | 200 | | | | | | | | | | | | |
| 180 | 225 | | | | | | | | | | | | |
| 200 | 250 | | | | | | | | | | | | |
| 240 | 300 | NV400-CW | | | | | | | NV400-SW | | NV400-HEW | NV400-REW | |
| 280 | 350 | | | | | | | | | | | | |
| 320 | 400 | | | | | | | | NV400-SEW | | | | |
| 400 | 500 | NV630-CW | | | | | | | NV630-SW NV630-SEW | | NV630 -HEW | | |
| 480 | 600 | | | | | | | | | | | | |
| 560 | 700 | NV800-SEW | | | | | | | | | NV800 -HEW | | |
| 640 | 800 | | | | | | | | | | | | |

# 6. Selection of Circuit Breaker for Motor Branch Circuit

**(direct-to-line starting or Y-Δ starting)**

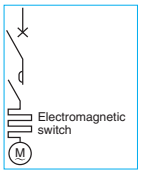


Motor is protected from overload by electromagnetic switch. Circuit breaker is installed to protect circuit from short-circuit.

## ■MCCB (NF)

### Table 4-13 200/220VAC for 3-phase induction motor

| | For 4-pole motor | | Electromagnetic contactor | | Breaking capacity (kA) 230 V AC (Icu sym) | | | | | | | | | | | | | | | | | | | |
|---|---|---|---|---|---|---|---|---|---|---|---|---|---|---|---|---|---|---|---|---|---|---|---|---|
| | | | | | 2.5 | | 7.5 | | 15 | | 25 | | 30(*1) | | 50 | | 85 | | 100 | | 150(*2) | | 200 | |
| | Output (kW) | Full-load current (A) | Model | Heater nominal (A) | Model | Rating | Model | Rating | Model | Rating | Model | Rating | Model | Rating | Model | Rating | Model | Rating | Type name | Rating | Model | Rating | Model | Rating |
| Direct-to-line starting | 0.1 | 0.7 | N10-N21 | 0.7 | NF30-CS | (3) | NF32-SV | (3) | NF63-SV | (3) | NF63-HV | (10) | | | NF125-SV | (15) | | | NF125-HV | (15) | | | NF125-UV | (15) |
| | 0.2 | 1.2 | | 1.3 | | | | | | | | | | | | | | | | | | | | |
| | 0.4 | 2.1 | N10-N21 | 2.1 | NF30-CS | 5 | NF32-SV | 5 | NF63-SV | 5 | NF63-HV | (10) | | | NF125-SV | (15) | | | NF125-HV | (15) | | | NF125-UV | (15) |
| | 0.75 | 3.7 | N10-N21 | 3.6 | NF30-CS | 10 | NF32-SV | 10 | NF63-SV | 10 | NF63-HV | 10 | | | NF125-SV | (15) | | | NF125-HV | (15) | | | NF125-UV | (15) |
| | 1.5 | 6.4 | N10-N25 | 6.6 | NF30-CS | 15 | NF32-SV | 15 | NF63-SV | 15 | NF63-HV | 15 | | | NF125-SV | (15) | | | NF125-HV | 15 | | | NF125-UV | (15) |
| | 2.2 | 9.1 | N10-N35 | 9 | NF30-CS | 20 | NF32-SV | 20 | NF63-SV | 20 | NF63-HV | 20 | | | NF125-SV | 20 | | | NF125-HV | 20 | | | NF125-UV | 20 |
| | 3.7 | 15 | N18-N35 | 15 | NF30-CS | 30 | NF32-SV | 30 | NF63-SV | 30 | NF63-HV | 30 | | | NF125-SV | 30 | | | NF125-HV | 30 | | | NF125-UV | 30 |
| | 5.5 | 22 | N25·N35·N50·N65 | 22 | | | NF63-CV | 50 | NF63-SV | 50 | NF63-HV | 50 | | | NF125-SV | 50 | | | NF125-HV | 50 | | | NF125-UV | 50 |
| | 7.5 | 29 | N35·N50-N80 | 29 | | | NF63-CV | 60 | NF63-SV | 60 | NF63-HV | 60 | | | NF125-SV | 60 | | | NF125-HV | 60 | | | NF125-UV | 60 |
| | 11 | 44 | N50-N95 | 42 | | | | | | | | | NF125-CV | 75 | NF125-SV | 75 | | | NF125-HV | 75 | | | NF125-UV | 75 |
| | 15 | 55 | N65-N125 | 54 | | | | | | | | | NF125-CV | 100 | NF125-SV | 100 | | | NF125-HV | 100 | | | NF125-UV | 100 |
| Y-Δ starting | 5.5 | 22 | — | 22 | | | NF63-CV | 50 | NF63-SV | 50 | NF63-HV | 50 | | | NF125-SV | 50 | | | NF125-HV | 50 | | | NF125-UV | 50 |
| | 7.5 | 29 | — | 29 | | | NF63-CV | 60 | NF63-SV | 60 | NF63-HV | 60 | NF125-CV | 60 | NF125-SV | 60 | | | NF125-HV | 60 | | | NF125-UV | 60 |
| | 11 | 44 | — | 42 | | | | | | | | | NF125-CV | 75 | NF125-SV | 75 | | | NF125-HV | 75 | | | NF125-UV | 75 |
| | 15 | 55 | — | 54 | | | | | | | | | NF125-CV | 100 | NF125-SV | 100 | | | NF125-HV | 100 | | | NF125-UV | 100 |
| Direct-to-line starting | 18.5 | 67 | N80-N125 | 67 | | | | | | | | | NF125-CV | 100 | NF125-SV | 100 | | | NF125-HV | 100 | | | NF125-UV | 100 |
| | 22 | 85 | N95-N150 | 82 | | | | | | | | | NF250-CV | 150 | | | NF250-SV | 150 | NF250-HV | 150 | | | NF250-UV | 150 |
| | 30 | 110 | N125-N220 | 105 | | | | | | | | | NF250-CV | 175 | | | NF250-SV | 175 | NF250-HV | 175 | | | NF250-UV | 175 |
| | 37 | 130 | N150-N220 | 125 | | | | | | | | | NF250-CV | 225 | | | NF250-SV | 225 | NF250-HV | 225 | | | NF250-UV | 225 |
| | 45 | 164 | N180-N400 | 150 | | | | | | | | | | | NF400-CW | 350 | NF400-SW | 250 | NF400-HEW | 250 | NF400-REW | 250 | NF400-UEW | 250 |
| | 55 | 195 | N220-N400 | 180 | | | | | | | | | | | NF630-CW | 500 | NF400-SW | 300 | NF400-HEW | 300 | NF400-REW | 300 | NF400-UEW | 300 |
| | 75 | 267 | N300·N400·(N600) | 250 | | | | | | | | | | | NF630-CW | 600 | NF630-SW | 500 | NF400-HEW | 400 | NF400-REW | 400 | NF400-UEW | 400 |
| | 90 | 320 | N300·N400·(N600·N800) | 330 | | | | | | | | | | | NF800-CEW | 600 | NF630-SW | 600 | NF630-HEW | 500 | NF630-REW | 500 | NF800-UEW | 500 |
| | 110 | 385 | N300·N400·(N600·N800) | 330 | | | | | | | | | | | NF800-CEW | 600 | NF630-SEW | 600 | NF630-HEW | 600 | NF630-REW | 600 | NF800-UEW | 600 |
| | 132 | 470 | (N600·N800) | 500 | | | | | | | | | | | | | | | | | NF1000-SEW | 700 | | |
| | 160 | 580 | (N600·N800) | 500 | | | | | | | | | | | | | | | | | NF1250-SEW | 800 | | |
| | 200 | 720 | (N800) | 600 | | | | | | | | | | | | | | | | | NF1600-SEW | 1000 | | |

Notes *1 The breaking capacity of NF250-CV is 36kA. *2 The breaking capacity of NF1000- to 1600-SEW is 125kA.

### Table 4-14 400/440VAC for 3-phase induction motor

| | For 4-pole motor | | Electromagnetic contactor | | Breaking capacity (kA) 415 V AC (Icu sym) | | | | | | | | | | | | | | | | | | | |
|---|---|---|---|---|---|---|---|---|---|---|---|---|---|---|---|---|---|---|---|---|---|---|---|---|
| | | | | | 1.5 | | 2.5 | | 7.5 | | 10 | | 25 | | 30(*1) | | 50(*2) | | 70 | | 150(*3) | | 200 | |
| | Output (kW) | Full-load current (A) | Model | Heater nominal (A) | Model | Rating | Model | Rating | Model | Rating | Model | Rating | Model | Rating | Model | Rating | Model | Rating | Model | Rating | Model | Rating | Model | Rating |
| Direct-to-line starting | 0.2 | 0.6 | N10-N21 | 0.7 | NF30-CS | (3) | NF32-SV | (3) | NF63-SV | (3) | NF63-HV | 10 | | | NF125-SV | (15) | NF125-HV | (15) | | | | | NF125-UV | (15) |
| | 0.4 | 1.1 | N10-N21 | 1.3 | NF30-CS | (3) | NF32-SV | (3) | NF63-SV | (3) | NF63-HV | 10 | | | NF125-SV | (15) | NF125-HV | (15) | | | | | NF125-UV | (15) |
| | 0.75 | 1.9 | N10-N21 | 1.7 | NF30-CS | 5 | NF32-SV | 5 | NF63-SV | 5 | NF63-HV | 10 | | | NF125-SV | (15) | NF125-HV | (15) | | | | | NF125-UV | (15) |
| | 1.5 | 3.2 | N10-N21 | 3.6 | NF30-CS | 10 | NF32-SV | 10 | NF63-SV | 10 | NF63-HV | 10 | | | NF125-SV | (15) | NF125-HV | (15) | | | | | NF125-UV | (15) |
| | 2.2 | 4.6 | N10-N21 | 5 | NF30-CS | 10 | NF32-SV | 10 | NF63-SV | 10 | NF63-HV | 10 | | | NF125-SV | (15) | NF125-HV | (15) | | | | | NF125-UV | (15) |
| | 3.7 | 7.5 | N11-N35 | 6.6 | NF30-CS | 20 | NF32-SV | 20 | NF63-SV | 20 | NF63-HV | 20 | | | NF125-SV | 20 | NF125-HV | 20 | | | | | NF125-UV | 20 |
| | 5.5 | 11 | N18-N35 | 11 | NF30-CS | 30 | NF32-SV | 30 | NF63-SV | 30 | NF63-HV | 30 | | | NF125-SV | 30 | NF125-HV | 30 | | | | | NF125-UV | 30 |
| | 7.5 | 15 | N20-N35 • N50 | 15 | NF30-CS | 30 | NF32-SV | 30 | NF63-SV | 30 | NF63-HV | 30 | | | NF125-SV | 30 | NF125-HV | 30 | | | | | NF125-UV | 30 |
| | 11 | 22 | N25 • N35 • N50 • N65 | 22 | | 50 | NF63-CV | 50 | NF63-SV | 50 | NF63-HV | 50 | | | NF125-SV | 50 | NF125-HV | 50 | | | | | NF125-UV | 50 |
| | 15 | 28 | N35 • N50-N80 | 28 | | | NF63-CV | 60 | NF63-SV | 60 | NF63-HV | 60 | | | NF125-SV | 60 | NF125-HV | 60 | | | | | NF125-UV | 60 |
| | 18.5 | 34 | N50-N95 | 35 | | | NF63-CV | 60 | NF63-SV | 60 | NF125-CV | 60 | | | NF125-SV | 60 | NF125-HV | 60 | | | | | NF125-UV | 60 |
| | 22 | 42 | N50-N95 | 42 | | | | | | | NF125-CV | 75 | | | NF125-SV | 75 | NF125-HV | 75 | | | | | NF125-UV | 75 |
| | 30 | 55 | N65-N125 | 54 | | | | | | | NF125-CV | 100 | | | NF125-SV | 100 | NF125-HV | 100 | | | | | NF125-UV | 100 |
| | 37 | 65 | N80-N150 | 67 | | | | | | | NF125-CV | 100 | | | NF125-SV | 100 | NF125-HV | 100 | | | | | NF125-UV | 100 |
| | 45 | 82 | N95-N150 | 82 | | | | | | | | | NF250-CV | 125 | NF250-SV | 125 | | | NF250-HV | 125 | | | NF250-UV | 125 |
| Y-Δ starting | 5.5 | 11 | – | 11 | | | NF63-CV | 30 | NF63-SV | 30 | NF63-HV | 30 | | | NF125-SV | 30 | NF250-HV | 30 | | | | | NF125-UV | 30 |
| | 7.5 | 15 | – | 15 | | | NF63-CV | 40 | NF63-SV | 40 | NF63-HV | 40 | | | NF125-SV | 40 | NF250-HV | 40 | | | | | NF125-UV | 40 |
| | 11 | 22 | – | 22 | | | NF63-CV | 50 | NF63-SV | 50 | NF63-HV | 50 | | | NF125-SV | 50 | NF250-HV | 50 | | | | | NF125-UV | 50 |
| | 15 | 28 | – | 28 | | | NF63-CV | 60 | NF63-SV | 60 | NF125-CV | 60 | | | NF125-SV | 60 | NF250-HV | 60 | | | | | NF125-UV | 60 |
| | 18.5 | 34 | – | 35 | | | NF63-CV | 60 | NF63-SV | 60 | NF125-CV | 60 | | | NF125-SV | 60 | NF250-HV | 60 | | | | | NF125-UV | 60 |
| | 22 | 42 | – | 42 | | | | | | | NF125-CV | 75 | | | NF125-SV | 75 | NF250-HV | 75 | | | | | NF125-UV | 75 |
| | 30 | 55 | – | 54 | | | | | | | NF125-CV | 100 | | | NF125-SV | 100 | NF250-HV | 100 | | | | | NF125-UV | 100 |
| | 37 | 65 | – | 67 | | | | | | | NF125-CV | 100 | | | NF125-SV | 100 | NF250-HV | 100 | | | | | NF125-UV | 100 |
| | 45 | 82 | – | 82 | | | | | | | | | NF250-CV | 150 | NF250-SV | 150 | | | NF250-HV | 150 | | | NF250-UV | 150 |
| Direct-to-line starting | 55 | 96 | N125-N220 | 105 | | | | | | | | | NF250-CV | 175 | NF250-SV | 175 | | | NF250-HV | 175 | | | NF250-UV | 175 |
| | 75 | 134 | N150-N220 | 125 | | | | | | | | | NF250-CV | 225 | NF250-SV | 225 | | | NF250-HV | 225 | | | NF250-UV | 225 |
| | 90 | 160 | N180-N400 | 150 | | | | | | | | | | | NF250-SEV | 225 | | | NF250-HEV | 225 | NF400-REW | 225 | NF400-UEW | 225 |
| | 110 | 192 | N180-N400 | 180 | | | | | | | | | | | | | NF400-SW | 350 | NF400-HEW | 300 | NF400-REW | 300 | NF400-UEW | 300 |
| | 132 | 233 | N220-N400 | 250 | | | | | | | | | | | | | NF400-SW | 400 | NF400-HEW | 400 | NF400-REW | 400 | NF400-UEW | 400 |
| | 160 | 290 | N300 • N400 • (N600) | 250 | | | | | | | | | | | | | NF630-SW | 500 | NF630-HEW | 500 | NF630-REW | 500 | NF800-UEW | 500 |
| | 200 | 360 | N300 • N400 • (N600 • N800) | 330 | | | | | | | | | | | | | NF630-SW | 600 | NF630-HEW | 600 | NF630-REW | 600 | NF800-UEW | 600 |
| | 220 | 389 | N300 • N400 • (N600 • N800) | – | | | | | | | | | | | | | NF630-SW | 600 | NF630-HEW | 600 | NF630-REW | 600 | NF800-UEW | 600 |
| | 250 | 430 | (N600 • N800) | 500 | | | | | | | | | | | | | NF630-SEW | 700 | NF630-HEW | 600 | NF630-REW | 600 | NF800-UEW | 700 |
| | 300 | 500 | (N600 • N800) | 500 | | | | | | | | | | | | | NF800-SEW | 700 | NF800-HEW | 700 | NF800-REW | 700 | NF800-UEW | 700 |

Notes *1 The breaking capacity of NF250-SV and NF250-SEV is 36kA. *2 The breaking capacity of NF400-SW is 45kA. *3 The breaking capacity of NF400- to 800-REW is 125kA.

Remarks:
1. Circuit breakers are selected under the starting conditions shown in the right table.
2. Protection coordination is examined under the condition of cold start at 40°C.
3. The ratings in parentheses apply to cases where thermal relays with saturating reactor are used.
4. Although the inrush current upon switching to Δ connection fluctuates depending on the residual magnetic flux at star starting, Δ connection closing phase or power supply transformer capacity, in most cases, the inrush current is less than the values shown in the right table.
5. The maximum starting current is the effective value of current (value after transient phenomena disappear) at the time when the rotator starts to rotate.
6. It was assumed that the Y-Δ starting would be performed by the open transition method which is a general method but is known to carry large transient inrush current.

**Starting conditions for selection**

| Motor capacity | Direct-to-line starting time (600%) | Startup inrush current (x full-load current) | |
|---|---|---|---|
| | | Direct-to-line starting | Y-Δ starting |
| 0.2 to 7.5kW | 10s | 12 times | 16 times |
| 11 to 55 | 10 | 12 | 17 |
| 75 to 300 | 10 | 14 | 18 |

## ■ELCB (NV)

### Table 4-15 200/220VAC for 3-phase induction motor

| | For 4-pole motor | | Electromagnetic contactor | | Breaking capacity (kA) 230 V AC (Icu sym) | | | | | | | | | | | | | | | | | |
|---|---|---|---|---|---|---|---|---|---|---|---|---|---|---|---|---|---|---|---|---|---|---|
| | | | | | 2.5 | | 7.5 | | 15(*1) | | 25 | | 30(*2) | | 50 | | 85 | | 100 | | 150 | |
| | Output (kW) | Full-load current (A) | Model | Heater nominal (A) | Model | Rating | Model | Rating | Model | Rating | Model | Rating | Model | Rating | Model | Rating | Model | Rating | Model | Rating | Model | Rating |
| Direct-to-line starting | 0.1 | 0.7 | N10-N21 | 0.7 | NV30-CS | (5) | NV63-CV | (5) | NV32-SV | (15) | NV63-HV | (15) | | | NV125-SV | (15) | | | NV125-HV | (15) | | |
| | 0.2 | 1.2 | | 1.3 | | | | | | | | | | | | | | | | | | |
| | 0.4 | 2.1 | N10-N21 | 2.1 | NV30-CS | 5 | NV63-CV | 5 | NV32-SV | (15) | NV63-HV | (15) | | | NV125-SV | (15) | | | NV125-HV | (15) | | |
| | 0.75 | 3.7 | N10-N21 | 3.6 | NV30-CS | 10 | NV63-CV | 10 | NV32-SV | (15) | NV63-HV | (15) | | | NV125-SV | (15) | | | NV125-HV | (15) | | |
| | 1.5 | 6.4 | N10-N25 | 6.6 | NV30-CS | 15 | NV63-CV | 15 | NV32-SV | 15 | NV63-HV | 15 | | | NV125-SV | 15 | | | NV125-HV | (15) | | |
| | 2.2 | 9.1 | N10-N35 | 9 | NV30-CS | 20 | NV63-CV | 20 | NV32-SV | 20 | NV63-HV | 20 | | | NV125-SV | 20 | | | NV125-HV | 20 | | |
| | 3.7 | 15 | N18-N35 | 15 | NV30-CS | 30 | NV63-CV | 30 | NV32-SV | 30 | NV63-HV | 30 | | | NV125-SV | 30 | | | NV125-HV | 30 | | |
| | 5.5 | 22 | N25 • N35 • N50 • N65 | 22 | | | NV63-CV | 50 | NV63-SV | 50 | NV63-HV | 50 | | | NV125-SV | 50 | | | NV125-HV | 50 | | |
| | 7.5 | 29 | N35 • N50-N80 | 29 | | | NV63-CV | 60 | NV63-SV | 60 | NV63-HV | 60 | | | NV125-SV | 60 | | | NV125-HV | 60 | | |
| | 11 | 44 | N50-N95 | 42 | | | | | | | | | NV125-CV | 75 | NV125-SV | 75 | | | NV125-HV | 75 | | |
| | 15 | 55 | N65-N125 | 54 | | | | | | | | | NV125-CV | 100 | NV125-SV | 100 | | | NV125-HV | 100 | | |
| Y-Δ starting | 5.5 | 22 | – | 22 | | | NV63-CV | 50 | NV63-SV | 50 | NV63-HV | 50 | | | NV125-SV | 50 | | | NV125-HV | 50 | | |
| | 7.5 | 29 | – | 29 | | | NV63-CV | 60 | NV63-SV | 60 | NV63-HV | 60 | NV125-CV | 60 | NV125-SV | 60 | | | NV125-HV | 60 | | |
| | 11 | 44 | – | 42 | | | | | | | | | NV125-CV | 75 | NV125-SV | 75 | | | NV125-HV | 75 | | |
| | 15 | 55 | – | 54 | | | | | | | | | NV125-CV | 100 | NV125-SV | 100 | | | NV125-HV | 100 | | |
| Direct-to-line starting | 18.5 | 67 | N80-N125 | 67 | | | | | | | | | NV125-CV | 100 | NV125-SV | 100 | | | NV125-HV | 100 | | |
| | 22 | 85 | N95-N150 | 82 | | | | | | | | | NV250-CV | 150 | | | NV250-SV | 150 | NV250-HV | 150 | | |
| | 30 | 110 | N125-N220 | 105 | | | | | | | | | NV250-CV | 175 | | | NV250-SV | 175 | NV250-HV | 175 | | |
| | 37 | 130 | N150-N220 | 125 | | | | | | | | | NV250-CV | 225 | | | NV250-SV | 225 | NV250-HV | 225 | | |
| | 45 | 164 | N180-N400 | 150 | | | | | | | | | | | NV400-CW | 350 | NV400-SW | 250 | NV400-HEW | 250 | NV400-REW | 250 |
| | 55 | 195 | N220-N400 | 180 | | | | | | | | | | | NV630-CW | 500 | NV400-SW | 300 | NV400-HEW | 300 | NV400-REW | 300 |
| | 75 | 267 | N300 • N400 • (N600) | 250 | | | | | | | | | | | NV630-CW | 600 | NV400-SEW | 400 | NV400-HEW | 400 | NV400-REW | 400 |
| | 90 | 320 | N300 • N400 • (N600 • N800) | 330 | | | | | | | | | | | | | NV630-SEW | 500 | NV630-HEW | 500 | | |
| | 110 | 385 | N300 • N400 • (N600 • N800) | 330 | | | | | | | | | | | | | NV630-SEW | 600 | NV630-HEW | 600 | | |

Notes *1 The breaking capacity of NV32-SV is 10kA. *2 The breaking capacity of NV250-CV is 36kA.

### Table 4-16 400/440VAC for 3-phase induction motor

| | For 4-pole motor | | Electromagnetic contactor | | Breaking capacity (kA) 415 V AC (Icu sym) | | | | | | | | | | | | | | | | | |
|---|---|---|---|---|---|---|---|---|---|---|---|---|---|---|---|---|---|---|---|---|---|---|
| | | | | | 2.5 | | 5 | | 7.5 | | 10 | | 25 | | 30(*1) | | 50(*2) | | 70 | | 125 | |
| | Output (kW) | Full-load current (A) | Model | Heater nominal (A) | Model | Rating | Model | Rating | Model | Rating | Model | Rating | Model | Rating | Model | Rating | Model | Rating | Model | Rating | Model | Rating |
| Direct-to-line starting | 0.2 | 0.6 | N10-N21 | 0.7 | NV63-CV | (5) | NV32-SV | (5) | NV63-SV | (5) | NV63-HV | (15) | | | NV125-SV | (15) | NV125-HV | (15) | | | | |
| | 0.4 | 1.1 | N10-N21 | 1.3 | NV63-CV | (5) | NV32-SV | (5) | NV63-SV | (5) | NV63-HV | (15) | | | NV125-SV | (15) | NV125-HV | (15) | | | | |
| | 0.75 | 1.9 | N10-N21 | 1.7 | NV63-CV | 5 | NV32-SV | 5 | NV63-SV | 5 | NV63-HV | (15) | | | NV125-SV | (15) | NV125-HV | (15) | | | | |
| | 1.5 | 3.2 | N10-N21 | 3.6 | NV63-CV | 10 | NV32-SV | 10 | NV63-SV | 10 | NV63-HV | (15) | | | NV125-SV | (15) | NV125-HV | (15) | | | | |
| | 2.2 | 4.6 | N10-N21 | 5 | NV63-CV | 10 | NV32-SV | 10 | NV63-SV | 10 | NV63-HV | (15) | | | NV125-SV | (15) | NV125-HV | (15) | | | | |
| | 3.7 | 7.5 | N11-N35 | 6.6 | NV63-CV | 20 | NV32-SV | 20 | NV63-SV | 20 | NV63-HV | 20 | | | NV125-SV | 20 | NV125-HV | 20 | | | | |
| | 5.5 | 11 | N18-N35 | 11 | NV63-CV | 30 | NV32-SV | 30 | NV63-SV | 30 | NV63-HV | 30 | | | NV125-SV | 30 | NV125-HV | 30 | | | | |
| | 7.5 | 15 | N20-N35 • N50 | 15 | NV63-CV | 30 | NV32-SV | 30 | NV63-SV | 30 | NV63-HV | 30 | | | NV125-SV | 30 | NV125-HV | 30 | | | | |
| | 11 | 22 | N25 • N35 • N50 • N65 | 22 | NV63-CV | 50 | | | NV63-SV | 50 | NV63-HV | 50 | | | NV125-SV | 50 | NV125-HV | 50 | | | | |
| | 15 | 28 | N35 • N50-N80 | 28 | NV63-CV | 60 | | | NV63-SV | 60 | NV63-HV | 60 | | | NV125-SV | 60 | NV125-HV | 60 | | | | |
| | 18.5 | 34 | N50-N95 | 35 | | | | | | | NV125-CV | 60 | | | NV125-SV | 60 | NV125-HV | 60 | | | | |
| | 22 | 42 | N50-N95 | 42 | | | | | | | NV125-CV | 75 | | | NV125-SV | 75 | NV125-HV | 75 | | | | |
| | 30 | 55 | N65-N125 | 54 | | | | | | | NV125-CV | 100 | | | NV125-SV | 100 | NV125-HV | 100 | | | | |
| | 37 | 65 | N80-N150 | 67 | | | | | | | NV125-CV | 100 | | | NV125-SV | 100 | NV125-HV | 100 | | | | |
| | 45 | 82 | N95-N150 | 82 | | | | | | | | | NV250-CV | 125 | NV250-SV | 125 | | | NV250-HV | 125 | | |
| Y-Δ starting | 5.5 | 11 | – | 11 | NV63-CV | 30 | NV32-SV | 30 | NV63-SV | 30 | NV63-HV | 30 | | | NV125-SV | 30 | NV125-HV | 30 | | | | |
| | 7.5 | 15 | – | 15 | NV63-CV | 40 | | | NV63-SV | 40 | NV63-HV | 40 | | | NV125-SV | 40 | NV125-HV | 40 | | | | |
| | 11 | 22 | – | 22 | NV63-CV | 50 | | | NV63-SV | 50 | NV63-HV | 50 | | | NV125-SV | 50 | NV125-HV | 50 | | | | |
| | 15 | 28 | – | 28 | NV63-CV | 60 | | | NV63-SV | 60 | NV125-CV | 60 | | | NV125-SV | 60 | NV125-HV | 60 | | | | |
| | 18.5 | 34 | – | 35 | | | | | | | NV125-CV | 60 | | | NV125-SV | 60 | NV125-HV | 60 | | | | |
| | 22 | 42 | – | 42 | | | | | | | NV125-CV | 75 | | | NV125-SV | 75 | NV125-HV | 75 | | | | |
| | 30 | 55 | – | 54 | | | | | | | NV125-CV | 100 | | | NV125-SV | 100 | NV125-HV | 100 | | | | |
| | 37 | 65 | – | 67 | | | | | | | NV125-CV | 100 | | | NV125-SV | 100 | NV125-HV | 100 | | | | |
| | 45 | 82 | – | 82 | | | | | | | | | NV250-CV | 150 | NV250-SV | 150 | | | NV250-HV | 150 | | |
| Direct-to-line starting | 55 | 96 | N125-N220 | 105 | | | | | | | | | NV250-CV | 175 | NV250-SV | 175 | | | NV250-HV | 175 | | |
| | 75 | 134 | N150-N220 | 125 | | | | | | | | | NV250-CV | 225 | NV250-SV | 225 | | | NV250-HV | 225 | | |
| | 90 | 160 | N180-N400 | 150 | | | | | | | | | | | NV250-SEW | 225 | | 225 | NV250-HEW | 225 | NV400-REW | 225 |
| | 110 | 192 | N180-N400 | 180 | | | | | | | | | | | | | NV400-SW | 350 | NV400-HEW | 300 | NV400-REW | 300 |
| | 132 | 233 | N220-N400 | 250 | | | | | | | | | | | | | NV400-SW | 400 | NV400-HEW | 400 | NV400-REW | 400 |
| | 160 | 290 | N300 • N400 • (N600) | 250 | | | | | | | | | | | | | NV630-SEW | 500 | NV630-HEW | 500 | | |
| | 200 | 360 | N300 • N400 • (N600 • N800) | 330 | | | | | | | | | | | | | NV630-SEW | 600 | NV630-HEW | 600 | | |

Notes *1 The breaking capacity of NV250-SV and NV250-SEV is 36kA. *2 The breaking capacity of NV400-SW is 45kA.

Remark: 1. For the selecting conditions, please refer to the remarks on page 73.

### Example of Y-Δ starting current waveform (crest value envelope)

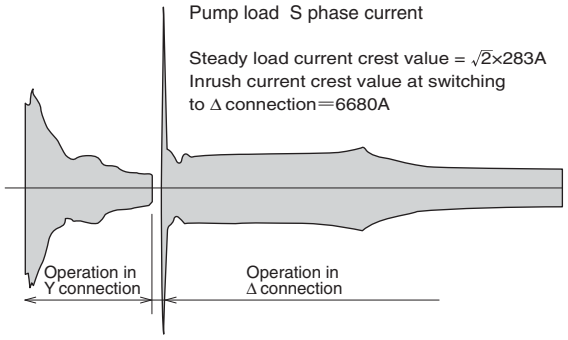

# 7. Selection of Motor Protection Breaker

## ■Motor Protection Breakers

In principle, the operating characteristic curve of a selected motor breaker must be lower than the heat characteristic of the motor. The following table shows the rated capacities of Mitsubishi's standard squired-cage 3-phase motors (4-pole). The starting conditions are shown in the table.

### Table 4-17 for 3-phase induction motor

| Model | Motor Protection Breaker | NF32-SV | NF63-CV | NF63-SV | NF125-SV | NF250-SV | |
|---|---|---|---|---|---|---|---|
| Rated breaking capacity (kA) | 230V | 7.5 | 7.5 | 15 | 50 | 85 | |
| | 415V | 2.5 | 2.5 | 7.5 | 30 | 36 | |
| 600% starting time limit (s) | | 2 | 32 A or less: 2<br>40 A or more: 7 | 32 A or less: 2<br>40 A or more: 7 | 32 A or less: 2<br>40 A or more: 7 | 5 | |
| Startup inrush current limit (%) | | 1200 | 1200 | 1200 | 1200 | 1100 | |
| Example of rated capacity of motor (kW) | | Rated current | Rated current | Rated current | Rated current | Rated current | Model for combination with electromagnetic contactor |
| 200/220V | 400/440V | | | | | | |
| | | | | | | | |
| | | | | | | | |
| | | | | | | | |
| | | | | | | | |
| | 0.4 | | | | | | |
| 0.2 | | | | | | | |
| | | | | | | | |
| | | | | | | | |
| | 0.75 | | | | | | |
| | | | | | | | |
| 0.4 | | | | | | | N10-N21 |
| | | | | | | | |
| | | | | | | | |
| | | | | | | | |
| 0.75 | 1.5 | 4 | 4 | 4 | | | |
| | | | | | | | |
| | 2.2 | 5 | 5 | 5 | | | |
| | | | | | | | |
| | | | | | | | |
| 1.5 | | 7.1 | 7.1 | 7.1 | | | |
| | 3.7 | 8 | 8 | 8 | | | |
| | | | | | | | N11-N35 |
| 2.2 | | 10 | 10 | 10 | | | |
| | 5.5 | 12 | 12 | 12 | (12.5) | | N18-N35 |
| | | | | | | | N20-N35 |
| 3.7 | 7.5 | 16 | 16 | 16 | (16) | | N50 |
| | | | | | | | |
| | | | | | | | N25 • N35 |
| | | | | | | | N50 • N65 |
| 5.5 | 11 | 25 | 25 | 25 | (25) | | |
| | | | | | | | N35 |
| 7.5 | 15 | 32 | 32 | 32 | 32 | | N50-N80 |
| | | | | | | | |
| | | | 40 | 40 | (40) | | N50-N95 |
| 11 | 22 | | 45 | 45 | 45 | | |
| | | | | | | | |
| | | | | | | | N65-N125 |
| 15 | 30 | | | | 63 | | |
| 18.5 | 37 | | | | 71 | | N80-N125 |
| | | | | | | | |
| 22 | 45 | | | | 90 | | N90-N125 |
| | 55 | | | | 100 | | |
| | 55 | | | | | | N125-N220 |
| 30 | | | | | | 125 | |
| 37 | 75 | | | | | 150 | N150-N400 |
| 45 | 90 | | | | | 175 | N180-N400 |
| | | | | | | 200 | N220-N400 |
| 55 | 110 | | | | | 225 | |

Remarks: 1. Fot the rated curent in parentheses, breakers will be manufactured to order.
2. The approximate values of inrush current at direct-to-line starting are shown below. Up to 7.5 kW: 1000% 11 kW or more: 1200% 75 kW or more: 1400%
When the starting current is large and the starting power factor is low, a combination with an electromagnetic switch selected in accordance with "Table of selection of circuit breaker for motor branch circuit" shown on page 73 is suitable.

Cautions

(1) Note that any circuit breaker operates when the startup inrush current, starting current and starting time exceed the conditions shown in the above table.
Particularly, high-efficiency motors generally have higher starting current and lower starting torque compared to general-purpose motors, and motor breakers cannot be used for such motors.
(2) Note that a circuit breaker may operate when an electromagnetic contactor is opened or closed while a motor is running.
(3) Select a motor breaker having rated current approx. 1.0 to 1.1 times higher than the full load current of motor.

# 8. Selection of Circuit Breaker for Inverter Circuit

Install MCCB or ELCB on the primary side (power supply side) of the inverter. If it is installed on the secondary side, it may cause electronic circuit trouble or overheating.

## ■Selection of Circuit Breaker for Inverter Circuit

Since current containing harmonic components will flow, the rated current of circuit breaker must be approx. 1.4 times the inverter input current.

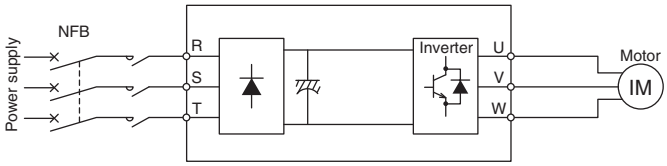


Note The life cycle of the circuit breaker for the circuit on the inverter primary side will be reduced under the influence of transient inrush current. Install a switch.

**Table 4-18 3-phase 200 V class**

| Inverter input capacity kVA | Rated current of circuit breaker A | Inverter input capacity kVA | Rated current of circuit breaker A |
|---|---|---|---|
| 5.5 | 30 | 41 | 175 |
| 9 | 40 | 52 | 225 |
| 12 | 50 | 66 | 300 |
| 17 | 75 | 80 | 350 |
| 20 | 100 | 100 | 500 |
| 28 | 125 | 110 | 500 |
| 34 | 150 | 132 | 600 |

## ■Selection of rated sensitivity current of Earth Leakage Circuit Breaker for Inverter Circuit

Select the rated sensitivity current as stated below.
Circuit breakers for harmonics and surge: Rated sensitivity current IΔn ≧ 10 × {Ig1 + Ign + Ig2 + Igm}
General circuit breakers: Rated sensitivity current IΔn ≧ 10 × {Ig1 + Ign + 3 × (Ig2 + Igm)}

Example 1

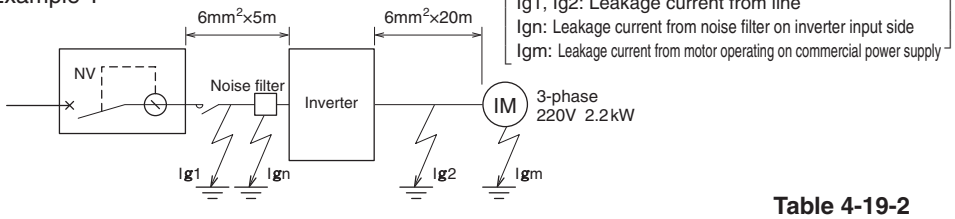


Example 2

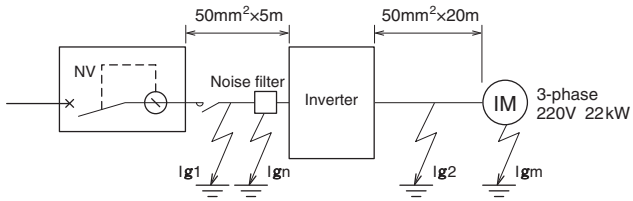


**Table 4-19-1**
**Examples of leakage current from line when IV cable is wired in close contact with ground (wiring in metallic conduit) (3-phase 220V 60Hz)**

| Wire size mm² | Leakage current/km mA |
|---|---|
| 6 | 135 |
| 10 | 140 |
| 16 | 169 |
| 25 | 176 |
| 35 | 203 |
| 50 | 205 |
| 70 | 241 |
| 95 | 247 |

**Table 4-19-2**
**Example of leakage current from 3-phase induction motor (220V 60Hz)**

| Motor output (kW) | Leakage current (mA) |
|---|---|
| 2.2 | 0.2 |
| 3.7 | 0.29 |
| 5.5 | 0.32 |
| 7.5 | 0.42 |
| 11 | 0.55 |
| 15 | 0.63 |
| 18.5 | 0.72 |
| 22 | 0.8 |
| 30 | 0.96 |
| 37 | 1.1 |

### Example of selection 1

| | Breaker for harmonics and surge | General breaker |
|---|---|---|
| Leakage current Ig1 | $135 \times \frac{5}{1000} = 0.675$ | $135 \times \frac{5}{1000} = 0.675$ |
| Leakage current Ign | 0 (without noise filter) | |
| Leakage current Ig2 | $135 \times \frac{20}{1000} = 2.7$ | $135 \times \frac{20}{1000} \times 3 = 8.1$ |
| Leakage current Igm | 0.18 | 0.18 × 3 = 0.54 |
| Total leakage current Ig | 3.555 | 11.465 |
| Rated sensitivity current (> Ig × 10) | 100 | 200 |

### Example of selection 2

| | Breaker for harmonics and surge | General breaker |
|---|---|---|
| Leakage current Ig1 | $205 \times \frac{5}{1000} = 1.025$ | $205 \times \frac{5}{1000} = 1.025$ |
| Leakage current Ign | 0 (without noise filter) | |
| Leakage current Ig2 | $205 \times \frac{20}{1000} = 4.1$ | $205 \times \frac{20}{1000} = 12.3$ |
| Leakage current Igm | 0.72 | 0.72 × 3 = 2.16 |
| Total leakage current Ig | 5.845 | 15.485 |
| Rated sensitivity current (> Ig × 10) | 100 | 500 |

Remarks:
1. Circuit breakers for harmonics and surge can detect earth fault on the secondary side of inverter only when the operating frequency is 120 Hz or less. In the case of star connection by neutral point grounding method, the sensitivity current for earth fault on the inverter secondary side is degraded. In this case, for protective ground for load device, apply Class C grounding (10 Ω or less).
2. For general circuit breakers, the leakage current from the line between inverter and motor shall be calculated as three times the leakage current at the commercial frequency in consideration of harmonic content.
3. For the model names of circuit breakers for harmonics and surge, refer to the specification list in Section 2 of this document. Models not for harmonics and surge are general breakers.

# 9. Selection of Circuit Breaker for Transformer Primary Side

Notes 1. The life cycle of the circuit breaker for the circuit on the transformer primary side will be significantly reduced under the influence of excited inrush current. Install a switch to open and close the circuit.

2. Select a circuit breaker based on the example of excited inrush current of each transformer. When using a circuit breaker for a transformer, check the magnitude of excited inrush current with the transformer manufacturer.

## ■Single-phase 210-V

### Table 4-20-1 MCCB

| Transformer capacity kVA | Rated primary current A | Example of transformer excited inrush current ① | | | Example of transformer excited inrush current ② | | | Example of transformer excited inrush current ③ | | |
|---|---|---|---|---|---|---|---|---|---|---|
| | | Crest value of first wave (multiple) | Model | Rating A | Crest value of first wave (multiple) | Model | Rating A | Crest value of first wave (multiple) | Model | Rating A |
| 5 | 23.8 | 45 | NF125-CV(*1)<br>NF125-CV, NF125-SV, NF125-HV<br>NF125-SEV, NF125-HEV | 60<br>100<br>50 | 37 | NF63-CV(*1)<br>NF125-CV(*1)<br>NF125-CV, NF125-SV | 50<br>60<br>75 | 24 | NF63-CV(*1)<br>NF63-CV, NF63-SV<br>NF125-CV(*2)<br>NF125-SV | 30<br>50<br>(50)<br>50 |
| 7.5 | 35.7 | 45 | NF250-CV, NF250-SV, NF250-HV<br>NF250-SEV, NF250-HEV | 150<br>125 | 37 | NF125-SEV<br>NF125-CV(*1)<br>NF250-CV, NF250-SV | 50<br>75<br>125 | 24 | NF63-CV(*1)<br>NF125-CV(*1)(*2)<br>NF125-CV, NF125-SV | 50<br>60(50)<br>75 |
| 10 | 47.6 | 43 | NF250-CV, NF250-SV, NF250-HV<br>NF250-SEV, NF250-HEV | 200<br>125 | 37 | NF125-CV(*1)<br>NF250-CV, NF250-SV<br>NF250-SEV | 100<br>150<br>125 | 24 | NF125-CV(*1)<br>NF125-CV, NF125-SV | 60<br>100 |
| 15 | 71.4 | 43 | NF400-CW<br>NF400-SW<br>NF400-SEW, NF400-HEW | 400<br>300<br>200 | 35 | NF250-CV, NF250-SV<br>NF250-SEV | 225<br>125 | 23 | NF125-CV(*1)<br>NF250-CV, NF250-SV | 100<br>150 |
| 20 | 95.2 | 43 | NF400-SW<br>NF400-SEW, NF400-HEW | 400<br>200 | 35 | NF400-SW<br>NF400-SEW | 350<br>200 | 23 | NF250-CV, NF250-SV<br>NF250-SEV | 200<br>125 |
| 30 | 143 | 37 | NF400-SEW, NF400-HEW<br>NF630-SW | 200<br>500 | 34 | NF400-SEW | 200 | 23 | NF400-SW<br>NF400-SEW | 300<br>200 |
| 50 | 238 | 35 | NF630-SEW(*1)<br>NF1000-SEW | 300<br>500 | 34 | NF630-SEW | 300 | 23 | NF400-SEW(*1)<br>NF630-SEW | 300<br>300 |
| 75 | 357 | 30 | NF800-SEW(*1)<br>NF1250-SEW | 400<br>600 | 29 | NF800-SEW(*1) | 400 | 22 | NF630-SEW | 400 |
| 100 | 476 | 27 | NF1000-SEW | 800 | 28 | NF1600-SEW | 800 | 20 | NF800-SEW(*1) | 600 |
| 150 | 714 | 24 | – | – | 24 | – | – | 19 | NF1600-SEW | 800 |
| 200 | 952 | 21 | – | – | 22 | – | – | 19 | – | – |
| 300 | 1429 | 17 | – | – | 18 | – | – | 16 | – | – |
| 500 | 2381 | – | – | – | 17 | – | – | – | – | – |

### Table 4-20-2 ELCB

| Transformer capacity kVA | Rated primary current A | Example of transformer excited inrush current ① | | | Example of transformer excited inrush current ② | | | Example of transformer excited inrush current ③ | | |
|---|---|---|---|---|---|---|---|---|---|---|
| | | Crest value of first wave (multiple) | Model | Rating A | Crest value of first wave (multiple) | Model | Rating A | Crest value of first wave (multiple) | Model | Rating A |
| 5 | 23.8 | 45 | NV125-CV, NV125-SV, NV125-HV<br>NV125-SEV, NV125-HEV | 100<br>50 | 37 | NV125-CV, NV125-SV<br>NV125-SEV | 75<br>50 | 24 | NV63-CV, NV63-SV<br>NV125-CV<br>NV125-SV<br>NV125-SEV | 50<br>60<br>50<br>50 |
| 7.5 | 35.7 | 45 | NV250-CV, NV250-SV, NV250-HV<br>NV250-SEV, NV250-HEV | 150<br>125 | 37 | NV125-SEV<br>NV250-CV, NV250-SV | 50<br>125 | 24 | NV125-CV, NV125-SV<br>NV125-SEV | 75<br>50 |
| 10 | 47.6 | 43 | NV250-CV, NV250-SV, NV250-HV<br>NV250-SEV, NV250-HEV | 200<br>125 | 37 | NV250-CV, NV250-SV<br>NV250-SEV | 150<br>125 | 24 | NV125-CV, NV125-SV<br>NV250-CV, NV250-SV | 100<br>125 |
| 15 | 71.4 | 43 | NV400-CW<br>NV400-SW<br>NV400-SEW, NV400-HEW | 400<br>300<br>200 | 35 | NV250-CV, NV250-SV<br>NV250-SEV | 225<br>125 | 23 | NV250-CV, NV250-SV<br>NV250-SEV | 150<br>125 |
| 20 | 95.2 | 43 | NV400-SW<br>NV400-SEW, NV400-HEW | 400<br>200 | 35 | NV400-SW<br>NV400-SEW | 350<br>200 | 23 | NV250-CV, NV250-SV<br>NV250-SEV | 200<br>125 |
| 30 | 143 | 37 | NV400-SEW, NV400-HEW<br>NV630-SEW | 200<br>300 | 34 | NV400-SEW | 200 | 23 | NV400-SW<br>NV400-SEW | 300<br>200 |
| 50 | 238 | 35 | – | – | 34 | NV630-SEW | 300 | 23 | NV630-SEW<br>NV800-SEW | 300<br>400 |
| 75 | 357 | 30 | – | – | 29 | – | – | 22 | NV630-SEW | 400 |
| 100 | 476 | 27 | – | – | 28 | – | – | 20 | – | – |
| 150 | 714 | 24 | – | – | 24 | – | – | 19 | – | – |
| 200 | 952 | 21 | – | – | 22 | – | – | 19 | – | – |
| 300 | 1429 | 17 | – | – | 18 | – | – | 16 | – | – |
| 500 | 2381 | – | – | – | 17 | – | – | – | – | – |

Notes *1 Examples of selection of high-instantaneous circuit breakers (special models) for primary side of transformer.
*2 The circuit breakers with rating in parentheses are special models.

Remarks: 1. For the circuit breakers whose rated current is adjustable, the rated current values are shown.
2. The crest value of the first wave of excited inrush current shall be calculated based on the multiple for the crest value of the first wave in the table, and the calculated value shall not exceed the lower limit crest value of instantaneous tripping current of circuit breaker. The circuit breakers are selected on condition that the transformer rated current value does not exceed 0.9 times the circuit breaker rated current. If the multiple for the crest value of the first wave is different from that shown in the table, a circuit breaker must be separately selected.

## ■Single-phase 420-V

### Table 4-21-1 MCCB

| Transformer capacity kVA | Rated primary current A | Example of transformer excited inrush current ① | | | Example of transformer excited inrush current ② | | | Example of transformer excited inrush current ③ | | |
|---|---|---|---|---|---|---|---|---|---|---|
| | | Peak value of first wave (multiple) | Model | Rating A | Peak value of first wave (multiple) | Model | Rating A | Peak value of first wave (multiple) | Model | Rating A |
| 5 | 11.9 | 45 | NF63-CV(*1)<br>NF63-CV, NF63-SV, NF63-HV<br>NF125-CV, NF125-SV, NF125-HV | 30<br>50<br>50 | 37 | NF32-SV<br>NF63-CV, NF63-SV<br>NF125-SV | 15<br>15<br>15 | 24 | NF32-SV, NF63-CV, NF63-SV<br>NF125-SV | 15<br>40<br>15 |
| 7.5 | 17.9 | 45 | NF63-CV(*1)<br>NF125-CV, NF125-SV, NF125-HV | 50<br>75 | 37 | NF63-CV(*1)<br>NF63-CV, NF63-SV<br>NF125-CV, NF125-SV | 40<br>60<br>60 | 24 | NF32-SV, NF63-CV, NF63-SV<br>NF125-SV<br>NF125-CV(*2) | 30<br>30<br>(50) |
| 10 | 23.8 | 43 | NF125-CV(*1)<br>NF125-CV, NF125-SV, NF125-HV | 60<br>100 | 37 | NF63-CV(*1)<br>NF125-CV, NF125-SV | 50<br>75 | 24 | NF63-CV(*1)<br>NF63-CV, NF63-SV<br>NF125-CV(*2)<br>NF125-SV | 30<br>50<br>(50)<br>50 |
| 15 | 35.7 | 43 | NF125-CV(*1)<br>NF250-CV, NF250-SV, NF250-HV<br>NF250-SEV, NF250-HEV | 100<br>150<br>125 | 35 | NF125-CV(*1)<br>NF125-CV, NF125-SV | 60<br>100 | 23 | NF63-CV(*1)<br>NF125-CV(*1)(*2)<br>NF125-CV, NF125-SV | 50<br>60(50)<br>75 |
| 20 | 47.6 | 43 | NF250-CV, NF250-SV, NF250-HV<br>NF250-SEV, NF250-HEV | 200<br>125 | 35 | NF125-CV(*1)<br>NF250-CV, NF250-SV<br>NF250-SEV | 100<br>150<br>125 | 23 | NF125-CV(*1)<br>NF125-CV, NF125-SV | 60<br>100 |
| 30 | 71.4 | 37 | NF250-SEV, NF250-HEV<br>NF400-CW<br>NF400-SW | 125<br>350<br>250 | 34 | NF250-CV, NF250-SV<br>NF250-SEV | 225<br>125 | 23 | NF125-CV(*1)<br>NF250-CV, NF250-SV | 100<br>150 |
| 50 | 119 | 35 | NF400-SW<br>NF400-SEW, NF400-HEW | 400<br>200 | 34 | NF400-SW<br>NF400-SEW | 400<br>200 | 23 | NF250-SEV | 150 |
| 75 | 179 | 30 | NF400-SEW, NF400-HEW<br>NF630-SW<br>NF630-SEW, NF630-HEW | 200<br>500<br>300 | 29 | NF400-SEW | 200 | 22 | NF400-SW<br>NF400-SEW | 400<br>200 |
| 100 | 238 | 27 | NF400-SEW(*1)<br>NF630-SW<br>NF630-SEW, NF630-HEW | 300<br>600<br>300 | 28 | NF400-SEW(*1)<br>NF630-SEW | 300<br>300 | 20 | NF400-SEW | 350 |
| 150 | 357 | 24 | NF630-SEW(*1) | 400 | – | – | – | 19 | NF400-SEW(*1)<br>NF630-SEW | 400<br>400 |
| 200 | 476 | 21 | NF800-SEW(*1) | 600 | 22 | NF800-SEW(*1) | 600 | 19 | NF800-SEW(*1) | 600 |
| 300 | 714 | 17 | NF1250-SEW | 800 | 18 | NF1600-SEW | 800 | 16 | NF1250-SEW | 800 |
| 500 | 1190 | – | – | – | 17 | – | – | – | – | – |

### Table 4-21-2 ELCB

| Transformer capacity kVA | Rated primary current A | Example of transformer excited inrush current ① | | | Example of transformer excited inrush current ② | | | Example of transformer excited inrush current ③ | | |
|---|---|---|---|---|---|---|---|---|---|---|
| | | Peak value of first wave (multiple) | Model | Rating A | Peak value of first wave (multiple) | Model | Rating A | Peak value of first wave (multiple) | Model | Rating A |
| 5 | 11.9 | 45 | NV63-CV, NV63-SV, NV63-HV<br>NV125-CV<br>NV125-SV, NV125-HV | 50<br>60<br>50 | 37 | NV32-SV<br>NV63-CV, NV63-SV<br>NV125-SV | 15<br>15<br>15 | 24 | NV32-SV<br>NV63-CV, NV63-SV<br>NV125-SV | 15<br>15<br>15 |
| 7.5 | 17.9 | 45 | NV125-CV, NV125-SV, NV125-HV | 75 | 37 | NV63-CV, NV63-SV<br>NV125-CV, NV125-SV | 60<br>60 | 24 | NV32-SV<br>NV63-CV, NV63-SV<br>NV125-SV | 30<br>30<br>30 |
| 10 | 23.8 | 43 | NV125-CV, NV125-SV, NV125-HV<br>NV125-SEV, NV125-HEV | 100<br>50 | 37 | NV125-CV, NV125-SV<br>NV125-SEV | 75<br>50 | 24 | NV63-CV, NV63-SV<br>NV125-CV<br>NV125-SV | 50<br>60<br>50 |
| 15 | 35.7 | 43 | NV250-CV, NV250-SV, NV250-HV<br>NV250-SEV, NV250-HEV | 150<br>125 | 35 | NV125-CV, NV125-SV<br>NV125-SEV | 100<br>50 | 23 | NV125-CV, NF125-SV<br>NV125-SEV | 75<br>50 |
| 20 | 47.6 | 43 | NV250-CV, NV250-SV, NV250-HV<br>NV250-SEV, NV250-HEV | 200<br>125 | 35 | NV250-CV, NV250-SV<br>NV250-SEV | 150<br>125 | 23 | NV125-CV, NF125-SV<br>NV125-SEV | 100<br>60 |
| 30 | 71.4 | 37 | NV250-SEV, NV250-HEV<br>NV400-CW<br>NV400-SW | 125<br>350<br>250 | 34 | NV250-CV, NV250-SV<br>NV250-SEV | 225<br>125 | 23 | NV250-SV, NV250-SV<br>NV250-SEV | 150<br>125 |
| 50 | 119 | 35 | NV400-SW<br>NV400-SEW, NV400-HEW | 400<br>200 | 34 | NV400-SW<br>NV400-SEW | 400<br>200 | 23 | NV250-SEV | 150 |
| 75 | 179 | 30 | NV400-SEW, NV400-HEW<br>NV630-SEW, NV630-HEW | 200<br>300 | 29 | NV400-SEW | 200 | 22 | NV400-SW<br>NV400-SEW | 400<br>200 |
| 100 | 238 | 27 | NV630-SEW, NV630-HEW<br>NV800-SEW, NV800-HEW | 300<br>400 | 28 | NV630-SEW<br>NV800-SEW | 300<br>400 | 20 | NV400-SEW | 350 |
| 150 | 357 | 24 | – | – | 24 | – | – | 19 | NV630-SEW<br>NV800-SEW | 400<br>400 |
| 200 | 476 | 21 | – | – | 22 | – | – | 19 | – | – |
| 300 | 714 | 17 | – | – | 18 | – | – | 16 | – | – |
| 500 | 1190 | – | – | – | – | – | – | – | – | – |

Notes *1 Examples of selection of high-instantaneous circuit breakers (special models) for primary side of transformer.
*2 The circuit breakers with rating in parentheses are special models.

Remarks: 1. For the circuit breakers whose rated current is adjustable, the rated current values are shown.
2. The peak value of the first wave of excited inrush current shall be calculated based on the multiple for the peak value of the first wave in the table, and the calculated value shall not exceed the lower limit peak value of instantaneous tripping current of circuit breaker. The circuit breakers are selected on condition that the transformer rated current value does not exceed 0.9 times the circuit breaker rated current. If the multiple for the peak value of the first wave is different from that shown in the table, a circuit breaker must be separately selected.

## ■3-phase 210-V

### Table 4-21-3 MCCB

| Transformer capacity kVA | Rated primary current A | Example of transformer excited inrush current ① | | | Example of transformer excited inrush current ② | | | Example of transformer excited inrush current ③ | | |
|---|---|---|---|---|---|---|---|---|---|---|
| | | Peak value of first wave (multiple) | Model | Rating A | Peak value of first wave (multiple) | Model | Rating A | Peak value of first wave (multiple) | Model | Rating A |
| 5 | 13.7 | 25 | NF32-SV<br>NF63-CV, NF63-SV, NF63-HV<br>NF125-SV, NF125-HV | 20<br>20<br>20 | 26 | NF32-SV, NF63-CV, NF63-SV<br>NF125-SV | 20<br>20 | 18 | NF32-SV, NF63-CV, NF63-SV<br>NF125-SV | 20<br>20 |
| 7.5 | 20.6 | 25 | NF63-CV(*1)<br>NF63-CV, NF63-SV, NF63-HV<br>NF125-CV(*2)<br>NF125-SV, NF125-HV | 30<br>50<br>(50)<br>50 | 26 | NF63-CV(*1)<br>NF63-CV, NF63-SV<br>NF125-CV, NF125-SV | 30<br>50<br>50 | 18 | NF32-SV, NF63-CV, NF63-SV<br>NF125-CV(*2)<br>NF125-SV | 30<br>(50)<br>30 |
| 10 | 27.5 | 24 | NF63-CV(*1)<br>NF63-CV, NF63-SV, NF63-HV<br>NF125-CV(*1)<br>NF125-CV, NF125-SV, NF125-HV | 40<br>60<br>50<br>60 | 26 | NF63-CV(*1)<br>NF63-CV, NF63-SV<br>NF125-CV, NF125-SV | 40<br>60<br>60 | 18 | NF63-CV, NF63-SV<br>NF125-CV(*2)<br>NF125-SV | 50<br>(50)<br>50 |
| 15 | 41.2 | 24 | NF63-CV(*1)<br>NF125-CV, NF125-SV, NF125-HV | 50<br>100 | 26 | NF125-CV(*1)<br>NF125-CV, NF125-SV | 60<br>100 | 18 | NF63-CV(*1)<br>NF63-CV, NF63-SV<br>NF125-CV, NF125-SV | 50<br>60<br>60 |
| 20 | 55.0 | 20 | NF125-CV(*1)<br>NF125-CV, NF125-SV, NF125-HV | 75<br>100 | 26 | NF125-CV(*1)<br>NF125-SEV<br>NF250-CV, NF250-SV | 75<br>75<br>125 | 18 | NF125-CV(*1)<br>NF125-CV, NF125-SV | 75<br>100 |
| 30 | 82.5 | 20 | NF125-CV(*1)<br>NF250-CV, NF250-SV, NF250-HV<br>NF250-SEV, NF250-HEV | 100<br>150<br>125 | 26 | NF250-CV, NF250-SV<br>NF250-SEV | 200<br>125 | 18 | NF125-CV(*1)<br>NF250-CV, NF250-SV | 100<br>150 |
| 50 | 137 | 20 | NF250-SEV, NF250-HEV<br>NF400-CW<br>NF400-SW | 175<br>350<br>250 | 23 | NF400-CW<br>NF400-SW<br>NF400-SEW | 400<br>300<br>200 | 16 | NF250-CV, NF250-SV<br>NF250-SEV | 200<br>175 |
| 75 | 206 | 21 | NF400-SW<br>NF400-SEW, NF400-HEW | 400<br>250 | 18 | NF400-SW<br>NF400-SEW | 350<br>250 | 14 | NF400-SW<br>NF400-SEW | 300<br>250 |
| 100 | 275 | 21 | NF400-SEW(*1)<br>NF630-SW<br>NF630-SEW, NF630-HEW | 350<br>600<br>350 | 17 | NF400-SEW | 350 | 13 | NF400-SW<br>NF400-SEW | 350<br>300 |
| 150 | 412 | 17 | NF630-SEW, NF630-HEW | 500 | 14 | NF630-SEW | 500 | 13 | NF630-SW<br>NF630-SEW | 500<br>500 |
| 200 | 550 | 16 | NF800-SEW(*1) | 700 | 13 | NF800-SEW | 700 | 12 | NF800-SEW | 700 |
| 300 | 825 | 16 | NF1600-SEW | 1000 | 13 | NF1250-SEW | 1000 | 12 | NF1000-SEW | 1000 |
| 500 | 1375 | – | – | – | 11 | NF1600-SEW | 1600 | 11 | NF1600-SEW | 1600 |

### Table 4-21-4 ELCB

| Transformer capacity kVA | Rated primary current A | Example of transformer excited inrush current ① | | | Example of transformer excited inrush current ② | | | Example of transformer excited inrush current ③ | | |
|---|---|---|---|---|---|---|---|---|---|---|
| | | Peak value of first wave (multiple) | Model | Rating A | Peak value of first wave (multiple) | Model | Rating A | Peak value of first wave (multiple) | Model | Rating A |
| 5 | 13.7 | 25 | NV32-SV<br>NV63-CV, NV63-SV, NV63-HV<br>NV125-SV, NV125-HV | 20<br>20<br>20 | 26 | NV32-SV<br>NV63-CV, NV63-SV<br>NV125-SV | 20<br>20<br>20 | 18 | NV32-SV<br>NV63-CV, NV63-SV<br>NV125-SV | 20<br>20<br>20 |
| 7.5 | 20.6 | 25 | NV63-CV, NV63-SV, NV63-HV<br>NV125-CV<br>NV125-SV, NV125-HV | 50<br>60<br>50 | 26 | NV63-CV, NV63-SV<br>NV125-CV<br>NV125-SV | 50<br>60<br>50 | 18 | NV32-SV<br>NV63-CV, NV63-SV<br>NV125-SV | 30<br>30<br>30 |
| 10 | 27.5 | 24 | NV63-CV, NV63-SV, NV63-HV<br>NV125-CV, NV125-SV, NV125-HV | 60<br>60 | 26 | NV63-CV, NV63-SV<br>NV125-CV, NV125-SV | 60<br>60 | 18 | NV63-CV, NV63-SV<br>NV125-CV<br>NV125-SV | 50<br>60<br>50 |
| 15 | 41.2 | 24 | NV125-CV, NV125-SV, NV125-HV<br>NV125-SEV, NV125-HEV | 100<br>50 | 26 | NV125-CV, NV125-SV<br>NV125-SEV | 100<br>50 | 18 | NV63-CV, NV63-SV<br>NV125-CV, NV125-SV | 60<br>60 |
| 20 | 55.0 | 20 | NV125-CV, NV125-SV, NV125-HV<br>NV125-SEV, NV125-HEV | 100<br>75 | 26 | NV125-SEV<br>NV250-CV, NV250-SV | 75<br>125 | 18 | NV125-CV, NV125-SV<br>NV125-SEV | 100<br>75 |
| 30 | 82.5 | 20 | NV250-CV, NV250-SV, NV250-HV<br>NV250-SEV, NV250-HEV | 150<br>125 | 26 | NV250-CV, NV250-SV<br>NV250-SEV | 200<br>125 | 18 | NV250-CV, NV250-SV<br>NV125-SEV | 150<br>125 |
| 50 | 137 | 20 | NV250-SEV, NV250-HEV<br>NV400-CW<br>NV400-SW | 175<br>350<br>250 | 23 | NV400-CW<br>NV400-SW<br>NV400-SEW | 400<br>300<br>200 | 16 | NV250-CV, NV250-SV<br>NV250-SEV | 200<br>175 |
| 75 | 206 | 21 | NV400-SW<br>NV400-SEW, NV400-HEW | 400<br>250 | 18 | NV400-SEW<br>NV400-SW | 250<br>350 | 14 | NV400-SW<br>NV400-SEW | 300<br>250 |
| 100 | 275 | 21 | NV630-SEW, NV630-HEW<br>NV800-SEW, NV800-HEW | 350<br>400 | 17 | NV400-SEW | 350 | 13 | NV400-SW<br>NV400-SEW | 350<br>300 |
| 150 | 412 | 17 | NV630-SEW, NV630-HEW | 500 | 14 | NV630-SEW<br>NV800-SEW | 500<br>500 | 13 | NV630-SEW<br>NV800-SEW | 500<br>500 |
| 200 | 550 | 16 | – | – | 13 | – | – | 12 | NV800-SEW | 700 |
| 300 | 825 | 16 | – | – | 13 | – | – | 12 | – | – |
| 500 | 1375 | – | – | – | 11 | – | – | 11 | – | – |

Notes *1 Examples of selection of high-instantaneous circuit breakers (special models) for primary side of transformer.
*2 The circuit breakers with rating in parentheses are special models.

Remarks: 1. For the circuit breakers whose rated current is adjustable, the rated current values are shown.
2. The peak value of the first wave of excited inrush current shall be calculated based on the multiple for the peak value of the first wave in the table, and the calculated value shall not exceed the lower limit peak value of instantaneous tripping current of circuit breaker. The circuit breakers are selected on condition that the transformer rated current value does not exceed 0.9 times the circuit breaker rated current. If the multiple for the peak value of the first wave is different from that shown in the table, a circuit breaker must be separately selected.

## 3-phase 420-V

### Table 4-21-5 MCCB

| Transformer capacity kVA | Rated primary current A | Example of transformer excited inrush current ① | | | Example of transformer excited inrush current ② | | | Example of transformer excited inrush current ③ | | |
|---|---|---|---|---|---|---|---|---|---|---|
| | | Peak value of first wave (multiple) | Model | Rating A | Peak value of first wave (multiple) | Model | Rating A | Peak value of first wave (multiple) | Model | Rating A |
| 5 | 6.9 | 32 | NF32-SV<br>NF63-CV, NF63-SV, NF63-HV<br>NF125-SV, NF125-HV | 10<br>10<br>15 | 26 | NF30-CS<br>NF32-SV, NF63-CV, NF63-SV | 30<br>10 | 18 | NF32-SV, NF63-CV, NF63-SV<br>NF125-SV | 10<br>15 |
| 7.5 | 10.3 | 32 | NF32-SV<br>NF63-CV, NF63-SV, NF63-HV<br>NF125-SV, NF125-HV | 15<br>15<br>15 | 26 | NF32-SV, NF63-CV, NF63-SV<br>NF125-SV | 15<br>15 | 18 | NF32-SV, NF63-CV, NF63-SV<br>NF125-SV | 15<br>15 |
| 10 | 13.7 | 31 | NF32-SV<br>NF63-CV, NF63-SV, NF63-HV<br>NF125-CV(*2)<br>NF125-SV, NF125-HV | 20<br>20<br>(50)<br>20 | 26 | NF32-SV<br>NF63-CV, NF63-SV<br>NF125-SV | 20<br>20<br>20 | 18 | NF32-SV<br>NF63-CV, NF63-SV<br>NF125-SV | 20<br>20<br>20 |
| 15 | 20.6 | 31 | NF63-CV(*1)<br>NF63-CV, NF63-SV, NF63-HV<br>NF125-CV, NF125-SV, NF125-HV<br>NF125-SEV, NF125-HEV | 40<br>60<br>60<br>50 | 26 | NF63-CV(*1)<br>NF63-CV, NF63-SV<br>NF125-CV, NF125-SV | 30<br>50<br>50 | 18 | NF32-SV, NF63-CV, NF63-SV<br>NF125-CV(*2)<br>NF125-SV | 30<br>(50)<br>30 |
| 20 | 27.5 | 26 | NF63-CV(*1)<br>NF63-CV, NF63-SV, NF63-HV<br>NF125-CV(*1)<br>NF125-CV, NF125-SV, NF125-HV | 40<br>60<br>50<br>60 | 26 | NF63-CV(*1)<br>NF63-CV, NF63-SV<br>NF125-CV, NF125-SV | 40<br>60<br>60 | 18 | NF63-CV(*1)<br>NF63-CV, NF63-SV<br>NF125-CV, NF125-SV | 40<br>50<br>50 |
| 30 | 41.2 | 24 | NF63-CV(*1)<br>NF125-CV(*1)<br>NF125-CV, NF125-SV, NF125-HV | 50<br>50<br>100 | 26 | NF125-CV(*1)<br>NF125-CV, NF125-SV | 60<br>100 | 18 | NF63-CV(*1)<br>NF125-CV, NF125-SV | 50<br>75 |
| 50 | 68.7 | 22 | NF125-CV(*1)<br>NF250-CV, NF250-SV, NF250-HV<br>NF250-SEV, NF250-HEV | 100<br>150<br>125 | 23 | NF125-CV(*1)<br>NF250-CV, NF250-SV | 100<br>150 | 16 | NF125-CV, NF125-SV | 100 |
| 75 | 103 | 15 | NF250-CV, NF250-SV, NF250-HV<br>NF250-SEV, NF250-HEV | 150<br>125 | 18 | NF250-CV, NF250-SV<br>NF250-SEV | 175<br>125 | 14 | NF250-CV, NF250-SV | 150 |
| 100 | 137 | 15 | NF250-CV, NF250-SV, NF250-HV<br>NF250-SEV, NF250-HEV | 200<br>175 | 17 | NF250-CV, NF250-SV<br>NF250-SEV | 200<br>175 | 13 | NF250-CV, NF250-SV | 175 |
| 150 | 206 | 15 | NF400-CW<br>NF400-SW<br>NF400-SEW, NF400-HEW | 400<br>300<br>250 | 14 | NF400-SW<br>NF400-SEW | 300<br>250 | 13 | NF400-CW<br>NF400-SW<br>NF400-SEW | 400<br>250<br>250 |
| 200 | 275 | 14 | NF400-SW<br>NF400-SEW, NF400-HEW | 350<br>350 | 13 | NF400-SW/SEW | 350/350 | 12 | NF400-SW<br>NF400-SEW | 350<br>350 |
| 300 | 412 | 10 | NF630-CW<br>NF630-SW<br>NF630-SEW, NF630-HEW | 600<br>500<br>500 | 13 | NF630-SEW | 500 | 12 | NF630-SW<br>NF630-SEW | 500<br>500 |
| 500 | 687 | 15 | NF800-SEW(*1)<br>NF1250-SEW | 800<br>800 | 11 | NF800-SEW | 800 | 11 | NF800-SEW | 800 |

### Table 4-21-6 ELCB

| Transformer capacity kVA | Rated primary current A | Example of transformer excited inrush current ① | | | Example of transformer excited inrush current ② | | | Example of transformer excited inrush current ③ | | |
|---|---|---|---|---|---|---|---|---|---|---|
| | | Peak value of first wave (multiple) | Model | Rating A | Peak value of first wave (multiple) | Model | Rating A | Peak value of first wave (multiple) | Model | Rating A |
| 5 | 6.9 | 32 | NV32-SV(*1)<br>NV63-CV, NV63-SV(*1)<br>NV63-HV<br>NV125-SV, NV125-HV | 15(10)<br>15(10)<br>15<br>15 | 26 | NV32-SV(*1)<br>NV63-CV, NV63-SV(*1)<br>NV125-SV | 15(10)<br>15(10)<br>15 | 18 | NV32-SV(*1)<br>NV63-CV, NV63-SV(*1)<br>NV125-SV | 15(10)<br>15(10)<br>15 |
| 7.5 | 10.3 | 32 | NV32-SV<br>NV63-CV, NV63-SV, NV63-HV<br>NV125-SV, NV125-HV | 15<br>15<br>15 | 26 | NV32-SV<br>NV63-CV, NV63-SV<br>NV125-SV | 15<br>15<br>15 | 18 | NV32-SV<br>NV63-CV, NV63-SV<br>NV125-SV | 15<br>15<br>15 |
| 10 | 13.7 | 31 | NV32-SV<br>NV63-CV, NV63-SV, NV63-HV<br>NV125-CV<br>NV125-SV, NV125-HV | 20<br>20<br>50<br>20 | 26 | NV32-SV<br>NV63-CV, NV63-SV<br>NV125-SV | 20<br>20<br>20 | 18 | NV32-SV<br>NV63-CV, NV63-SV<br>NV125-SV | 20<br>20<br>20 |
| 15 | 20.6 | 31 | NV63-CV, NV63-SV, NV63-HV<br>NV125-CV, NV125-SV, NV125-HV<br>NV125-SEV, NV125-HEV | 60<br>60<br>50 | 26 | NV63-CV, NV63-SV<br>NV125-CV<br>NV125-SV | 50<br>60<br>50 | 18 | NV32-SV<br>NV63-CV, NV63-SV<br>NV125-SV | 30<br>30<br>30 |
| 20 | 27.5 | 26 | NV63-CV, NV63-SV, NV63-HV<br>NV125-CV, NV125-SV, NV125-HV | 60<br>60 | 26 | NV63-CV, NV63-SV<br>NV125-CV, NV125-SV | 60<br>60 | 18 | NV63-CV, NV63-SV<br>NV125-CV<br>NV125-SV | 50<br>60<br>50 |
| 30 | 41.2 | 24 | NV125-CV, NV125-SV, NV125-HV<br>NV125-SEV, NV125-HEV | 100<br>50 | 26 | NV125-CV, NV125-SV<br>NV125-SEV | 100<br>50 | 18 | NV125-CV, NV125-SV | 75 |
| 50 | 68.7 | 22 | NV250-CV, NV250-SV, NV250-HV<br>NV250-SEV, NV250-HEV | 150<br>125 | 23 | NV250-CV, NV250-SV<br>NV250-SEV | 150<br>125 | 16 | NV125-CV, NV125-SV | 100 |
| 75 | 103 | 15 | NV250-CV, NV250-SV, NV250-HV<br>NV250-SEV, NV250-HEV | 150<br>125 | 18 | NV250-CV, NV250-SV<br>NV250-SEV | 175<br>125 | 14 | NV250-CV, NV250-SV | 150 |
| 100 | 137 | 15 | NV250-CV, NV250-SV, NV250-HV<br>NV250-SEV, NV250-HEV | 200<br>175 | 17 | NV250-CV, NV250-SV<br>NV250-SEV | 200<br>175 | 13 | NV250-CV, NV250-SV | 175 |
| 150 | 206 | 15 | NV400-CW<br>NV400-SW<br>NV400-SEW, NV400-HEW | 400<br>300<br>250 | 14 | NV400-SW<br>NV400-SEW | 300<br>250 | 13 | NV400-CW<br>NV400-SW<br>NV400-SEW | 400<br>250<br>250 |
| 200 | 275 | 14 | NV400-SW<br>NV400-SEW, NV400-HEW | 350<br>350 | 13 | NV400-SW<br>NV400-SEW | 350<br>350 | 12 | NV400-SW<br>NV400-SEW | 350<br>350 |
| 300 | 412 | 10 | NV630-CW, NV630-SW<br>NV630-SEW, NV630-HEW | 600<br>500 | 13 | NV630-SEW<br>NV800-SEW | 500<br>500 | 12 | NV630-SEW | 500 |
| 500 | 687 | 15 | – | – | 11 | – | – | 11 | – | – |

Notes *1 Examples of selection of high-instantaneous circuit breakers (special models) for primary side of transformer.
*2 The circuit breakers with rating in parentheses are special models.

Remarks: 1. For the circuit breakers whose rated current is adjustable, the rated current values are shown.
2. The peak value of the first wave of excited inrush current shall be calculated based on the multiple for the peak value of the first wave in the table, and the calculated value shall not exceed the lower limit peak value of instantaneous tripping current of circuit breaker. The circuit breakers are selected on condition that the transformer rated current value does not exceed 0.9 times the circuit breaker rated current. If the multiple for the peak value of the first wave is different from that shown in the table, a circuit breaker must be separately selected.

# 10. Combination for Selective Breaking

Combinations of main circuit breaker for coordination and branch circuit breakers capable of selective breaking and the breaking capacity (sym kA) for selective breaking at the installation point of the branch circuit breaker are shown below.

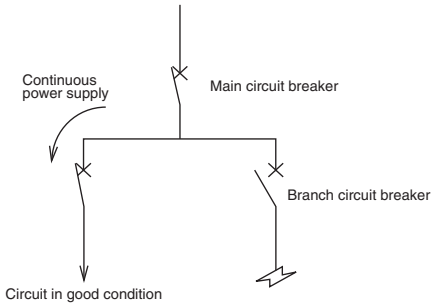


**Table 4-22-1 Combination for selective breaking**

**440VAC (IEC 60947-2)** sym.kA

| Branch breaker | | Rated ultimate short-circuit breaking capacity of each breaker Icu(kA) | Main breaker / Circuit breaker: NF125-SEV | NF125-HEV | NF250-SEV | NF250-HEV | NF400-SEV | NF400-HEW | NF630-SEW | NF630-HEW | NF800-CEW | NF800-SEW | NF800-HEW | NF1000-SEW | NF1250-SEW | NF1600-SEW |
|---|---|---|---|---|---|---|---|---|---|---|---|---|---|---|---|---|
| | | Icu(kA) | 36 | 65 | 36 | 65 | 42 | 65 | 42 | 65 | 36 | 42 | 65 | 85 | 85 | |
| NF-S・L・H・NV-S・H | NF32-SV | 2.5 | 1.5 | 1.5 | 2.5 | 2.5 | 2.5 | 2.5 | 2.5 | 2.5 | 2.5 | 2.5 | 2.5 | 2.5 | 2.5 | |
| | NV32-SV | 5 | 1.5 | 1.5 | 2.5 | 2.5 | 5 | 5 | 5 | 5 | 5 | 5 | 5 | 5 | 5 | |
| | NF63-SV<br>NV63-SV | 7.5 | 1.5 | 1.5 | 2.5 | 2.5 | 7.5 | 7.5 | 7.5 | 7.5 | 7.5 | 7.5 | 7.5 | 7.5 | 7.5 | |
| | NF63-HV<br>NV63-HV | 10 | 1.5 | 1.5 | 2.5 | 2.5 | 7.5 | 7.5 | 10 | 10 | 10 | 10 | 10 | 10 | 10 | |
| | NF125-SV<br>NF125-SEV<br>NV125-SV<br>NV125-SEV | 25 | – | – | 2.5 | 2.5 | 5 | 5 | 10 | 10 | 10 | 10 | 10 | 10 | 22 | |
| | NF125-SGV | 36 | – | – | 2.5 | 2.5 | 7.5 | 7.5 | 15 | 15 | 15 | 15 | 15 | 15 | 36 | |
| | NF125-LGV | 50 | – | – | 2.5 | 2.5 | 7.5 | 7.5 | 15 | 15 | 15 | 15 | 15 | 15 | 42 | |
| | NF125-HV<br>NV125-HV | 50 | – | – | 2.5 | 2.5 | 7.5 | 7.5 | 18 | 18 | 18 | 18 | 18 | 18 | 50 | |
| | NF125-HGV | 65 | – | – | 2.5 | 2.5 | 7.5 | 7.5 | 15 | 15 | 15 | 15 | 15 | 15 | 42 | |
| | NF160-SGV | 36 | – | – | – | – | 6.4 | 6.4 | 10 | 10 | 10 | 10 | 10 | 10 | 25 | |
| | NF160-LGV | 50 | – | – | – | – | 6.4 | 6.4 | 10 | 10 | 15 | 15 | 15 | 15 | 25 | |
| | NF160-HGV | 65 | – | – | – | – | 6.4 | 6.4 | 10 | 10 | 15 | 15 | 15 | 15 | 25 | |
| | NF250-SV<br>NF250-SEV<br>NV250-SV<br>NV250-SEV | 36 | – | – | – | – | – | – | 10 | 10 | 10 | 10 | 10 | 10 | 22 | |
| | NF250-SGV | 36 | – | – | – | – | – | – | 10 | 10 | 10 | 10 | 10 | 10 | 25 | |
| | NF250-LGV | 50 | – | – | – | – | – | – | 10 | 10 | 15 | 15 | 15 | 15 | 25 | |
| | NF250-HV<br>NF250-HEV<br>NV250-HV<br>NV250-HEV | 65 | – | – | – | – | – | – | 10 | 10 | 10 | 10 | 10 | 10 | 22 | |
| | NF250-HGV | 65 | – | – | – | – | – | – | 10 | 10 | 15 | 15 | 15 | 15 | 25 | |
| | NF400-SW<br>NV400-SW | 42 | – | – | – | – | – | – | – | – | 13 | 13 | 13 | 13 | 20 | |
| | NF400-SEW<br>NV400-SEW | 42 | – | – | – | – | – | – | 9.5 | 9.5 | 13 | 13 | 13 | 13 | 20 | |
| | NF400-HEW<br>NV400-HEW | 65 | – | – | – | – | – | – | 9.5 | 9.5 | 10 | 10 | 10 | 13 | 20 | |
| | NF400-REW<br>NV400-REW | 125 | – | – | – | – | – | – | 9.5 | 9.5 | 10 | 10 | 10 | 13 | 20 | |
| | NF630-SW<br>NF630-SEW<br>NV630-SW<br>NV630-SEW | 42 | – | – | – | – | – | – | – | – | – | – | – | – | 20 | |
| | NF630-HEW<br>NV630-HEW | 65 | – | – | – | – | – | – | – | – | – | – | – | – | 20 | |
| NF-C・NV-C | NF63-CV<br>NV63-CV | 2.5 | 1.5 | 1.5 | 2.5 | 2.5 | 2.5 | 2.5 | 2.5 | 2.5 | 2.5 | 2.5 | 2.5 | 7.5 | 2.5 | |
| | NF125-CV<br>NV125-CV | 10 | – | – | 2.5 | 2.5 | 5 | 5 | 10 | 10 | 10 | 10 | 10 | 15 | 10 | |
| | NF250-CV<br>NV250-CV | 15 | – | – | – | – | – | – | 7.5 | 7.5 | 7.5 | 7.5 | 7.5 | 7.5 | 15 | |
| | NF400-CW<br>NV400-CW | 25 | – | – | – | – | – | – | – | – | 10 | 10 | 10 | 13 | 20 | |
| | NF630-CW<br>NV630-CW | 36 | – | – | – | – | – | – | – | – | – | – | – | – | 20 | |
| NF-R・U | NF125-RGV | 125 | – | – | 2.5 | 2.5 | 15 | 15 | 30 | 30 | 30 | 42 | 50 | 50 | 85 | |
| | NF125-UV | 200 | – | – | 2.5 | 2.5 | 15 | 15 | 30 | 30 | 30 | 42 | 50 | 50 | 85 | |
| | NF250-RGV | 125 | – | – | – | – | – | – | 15 | 15 | 15 | 25 | 25 | 25 | 85 | |
| | NF250-UV | 200 | – | – | – | – | – | – | 15 | 15 | 15 | 25 | 25 | 25 | 85 | |
| | NF400-UEW | 200 | – | – | – | – | – | – | 9.5 | 9.5 | 15 | 15 | 15 | 15 | 25 | |
| | NF800-UEW | 200 | – | – | – | – | – | – | – | – | – | – | – | – | – | |

Note *1 Rated currents of branch breakers are 50A or less.

Remarks: 1. It is considered that the instantaneous tripping characteristic values of main circuit breakers have been set to the maximum values.
2. For the selectivity in the overcurrent range, separately check the coordination on the operating characteristic curve.

**230VAC (IEC 60947-2)** sym.kA

| Branch breaker | | Rated ultimate short-circuit breaking capacity of each breaker Icu(kA) | Main breaker / Circuit breaker: NF125-SEV | NF125-HEV | NF250-SEV | NF250-HEV | NF400-SEW | NF400-HEW | NF630-SEW | NF630-HEW | NF800-CEW | NF800-SEW | NF800-HEW | NF1000-SEW | NF1250-SEW | NF1600-SEW |
|---|---|---|---|---|---|---|---|---|---|---|---|---|---|---|---|---|
| | | Icu(kA) | 50 | 100 | 85 | 100 | 85 | 100 | 85 | 100 | 50 | 85 | 100 | 125 | 125 | |
| NF-S・L・H・NV-S・H | NF32-SV | 7.5 | 1.5 | 1.5 | 2.5 | 2.5 | 5 | 5 | 7.5 | 7.5 | 7.5 | 7.5 | 7.5 | 7.5 | 7.5 | |
| | NV32-SV | 10 | 1.5 | 1.5 | 2.5 | 2.5 | 10 | 10 | 10 | 10 | 10 | 10 | 10 | 10 | 10 | |
| | NF63-SV<br>NV63-SV | 15 | 1.5 | 1.5 | 2.5 | 2.5 | 10 | 10 | 10 | 10 | 10 | 10 | 10 | 10 | 10 | |
| | NF63-HV<br>NV63-HV | 25 | 1.5 | 1.5 | 2.5 | 2.5 | 10 | 10 | 20 | 20 | 25 | 25 | 25 | 25 | 25 | |
| | NF125-SV<br>NF125-SEV<br>NV125-SV<br>NV125-SEV | 50 | – | – | 2.5 | 2.5 | 7.5 | 7.5 | 15 | 15 | 18 | 18 | 18 | 18 | 50 | |
| | NF125-SGV | 85 | – | – | 2.5 | 2.5 | 7.5 | 7.5 | 15 | 15 | 18 | 18 | 18 | 18 | 85 | |
| | NF125-LGV | 90 | – | – | 2.5 | 2.5 | 7.5 | 7.5 | 15 | 15 | 18 | 18 | 18 | 18 | 85 | |
| | NF125-HV<br>NV125-HV | 100 | – | – | 2.5 | 2.5 | 10 | 10 | 25 | 25 | 35 | 35 | 35 | 35 | 100 | |
| | NF125-HGV | 100 | – | – | 2.5 | 2.5 | 7.5 | 7.5 | 15 | 15 | 18 | 18 | 18 | 18 | 85 | |
| | NF160-SGV | 85 | – | – | – | – | 6.4 | 6.4 | 10 | 10 | 10 | 10 | 10 | 10 | 50 | |
| | NF160-LGV | 90 | – | – | – | – | 6.4 | 6.4 | 10 | 10 | 10 | 10 | 10 | 10 | 50 | |
| | NF160-HGV | 100 | – | – | – | – | 6.4 | 6.4 | 10 | 10 | 10 | 10 | 10 | 10 | 50 | |
| | NF250-SV<br>NF250-SEV<br>NV250-SV<br>NV250-SEV | 85 | – | – | – | – | – | – | 10 | 10 | 10 | 10 | 10 | 10 | 50 | |
| | NF250-SGV | 85 | – | – | – | – | – | – | 10 | 10 | 10 | 10 | 10 | 10 | 50 | |
| | NF250-LGV | 90 | – | – | – | – | – | – | 10 | 10 | 10 | 10 | 10 | 10 | 50 | |
| | NF250-HV<br>NF250-HEV<br>NV250-HV<br>NV250-HEV | 100 | – | – | – | – | – | – | 10 | 10 | 10 | 10 | 10 | 10 | 50 | |
| | NF250-HGV | 100 | – | – | – | – | – | – | 10 | 10 | 10 | 10 | 10 | 10 | 50 | |
| | NF400-SW<br>NV400-SW | 85 | – | – | – | – | – | – | – | – | 13 | 13 | 13 | 13 | 20 | |
| | NF400-SEW<br>NV400-SEW | 85 | – | – | – | – | – | – | – | – | 13 | 13 | 13 | 13 | 20 | |
| | NF400-HEW<br>NV400-HEW | 100 | – | – | – | – | – | – | – | – | 13 | 13 | 13 | 13 | 20 | |
| | NF400-REW<br>NV400-REW | 150 | – | – | – | – | – | – | 9.5 | 9.5 | 13 | 13 | 13 | 13 | 20 | |
| | NF630-SW<br>NF630-SEW<br>NV630-SW<br>NV630-SEW | 85 | – | – | – | – | – | – | – | – | – | – | – | – | 20 | |
| | NF630-HEW<br>NV630-HEW | 100 | – | – | – | – | – | – | – | – | – | – | – | – | 20 | |
| NF-C・NV-C | NF63-CV<br>NV63-CV | 7.5 | 1.5 | 1.5 | 2.5 | 2.5 | 7.5 | 7.5 | 7.5 | 7.5 | 7.5 | 7.5 | 7.5 | 7.5 | 7.5 | |
| | NF125-CV<br>NV125-CV | 30 | – | – | 2.5 | 2.5 | 7.5 | 7.5 | 10 | 15 | 15 | 15 | 15 | 15 | 25 | |
| | NF250-CV<br>NV250-CV | 36 | – | – | – | – | – | – | 7.5 | 7.5 | 7.5 | 7.5 | 7.5 | 7.5 | 25 | |
| | NF400-CW<br>NV400-CW | 50 | – | – | – | – | – | – | – | – | 13 | 13 | 13 | 13 | 20 | |
| | NF630-CW<br>NV630-CW | 50 | – | – | – | – | – | – | – | – | – | – | – | – | 20 | |
| NF-R・U | NF125-RGV | 150 | – | – | 2.5 | 2.5 | 22 | 22 | 65 | 65 | 50 | 85 | 85 | 85 | 125 | |
| | NF125-UV | 200 | – | – | 2.5 | 2.5 | 22 | 22 | 65 | 65 | 50 | 85 | 85 | 85 | 125 | |
| | NF250-RGV | 150 | – | – | – | – | – | – | – | – | 18 | 50 | 50 | 50 | 125 | |
| | NF250-UV | 200 | – | – | – | – | – | – | – | – | 18 | 50 | 50 | 50 | 125 | |
| | NF400-UEW | 200 | – | – | – | – | – | – | – | – | 15 | 15 | 15 | 15 | 25 | |
| | NF800-UEW | 200 | – | – | – | – | – | – | – | – | – | – | – | – | – | |
| BH | BH-P | 2.5 | 1.5 | 1.5 | 2.5 | 2.5 | 2.5 | – | 2.5 | – | 2.5 | 2.5 | – | 2.5 | 2.5 | |
| | BH-D6<br>TYPE B | 6 | – | – | – | – | – | – | – | – | – | – | – | – | – | |
| | BH-D6<br>TYPE C | 6 | – | – | – | – | – | – | – | – | – | – | – | – | – | |

## Table 4-22-2 Combination for selective breakingwith AE-SW Series

### 440VAC (IEC 60947-2)

sym.kA

| Branch breaker | Rated ultimate short-circuit breaking capacity of each breaker / Main breaker | Icu(kA) | Low-voltage air circuit breaker AE-SW | | | | | | | | |
|---|---|---|---|---|---|---|---|---|---|---|---|
| | | | AE630-SW | AE1000-SW | AE1250-SW | AE1600-SW | AE2000-SWA | AE2000-SW | AE2500-SW | AE3200-SW | AE4000-SWA |
| | | | 65 | 65 | 65 | 65 | 65 | 85 | 85 | 85 | 85 |
| NF・S・L・H・NV・S・H | NF32-SV | 2.5 | 2.5 | 2.5 | 2.5 | 2.5 | 2.5 | 2.5 | 2.5 | 2.5 | 2.5 |
| | NV32-SV | 5 | 5 | 5 | 5 | 5 | 5 | 5 | 5 | 5 | 5 |
| | NF63-SV<br>NV63-SV | 7.5 | 7.5 | 7.5 | 7.5 | 7.5 | 7.5 | 7.5 | 7.5 | 7.5 | 7.5 |
| | NF63-HV<br>NV63-HV | 10 | 9(10) | 10 | 10 | 10 | 10 | 10 | 10 | 10 | 10 |
| | NF125-SV<br>NV125-SV | 25 | 7(25) | 20(25) | 25 | 25 | 25 | 25 | 25 | 25 | 25 |
| | NF125-SEV<br>NV125-SEV | 36 | 7(36) | 20(36) | 25(36) | 30(36) | 36 | 36 | 36 | 36 | 36 |
| | NF125-SGV | 36 | 9(36) | 20(36) | 36 | 36 | 36 | 36 | 36 | 36 | 36 |
| | NF125-LGV | 50 | 9(50) | 20(50) | 36(50) | 50 | 50 | 50 | 50 | 50 | 50 |
| | NF125-HV<br>NV125-HV | 50 | 9(50) | 30(50) | 50 | 50 | 50 | 50 | 50 | 50 | 50 |
| | NF125-HGV | 65 | 9(65) | 20(65) | 36(65) | 65 | 65 | 65 | 65 | 65 | 65 |
| | NF160-SGV | 36 | 9(36) | 15(36) | 25(36) | 36 | 36 | 36 | 36 | 36 | 36 |
| | NF160-LGV | 50 | 9(50) | 15(50) | 25(50) | 42(50) | 42(50) | 50 | 50 | 50 | 50 |
| | NF160-HGV | 65 | 9(65) | 15(65) | 25(65) | 42(65) | 42(65) | 65 | 65 | 65 | 65 |
| | NF250-SV<br>NF250-SEV<br>NV250-SV<br>NV250-SEV | 36 | 7(36) | 14(36) | 19(36) | 25(36) | 25(36) | 36 | 36 | 36 | 36 |
| | NF250-SGV | 36 | 7(36) | 15(36) | 25(36) | 36 | 36 | 36 | 36 | 36 | 36 |
| | NF250-LGV | 50 | 7(50) | 15(50) | 25(50) | 42(50) | 42(50) | 50 | 50 | 50 | 50 |
| | NF250-HV<br>NF250-HEV<br>NV250-HV<br>NV250-HEV | 65 | 7(65) | 15(65) | 25(65) | 42(65) | 42(65) | 65 | 65 | 65 | 65 |
| | NF250-HGV | 65 | 7(65) | 15(65) | 25(65) | 42(65) | 42(65) | 65 | 65 | 65 | 65 |
| | NF400-SW<br>NV400-SW | 42 | – | – | 18(42) | 24(42) | 24(42) | 33(42) | 42 | 42 | 42 |
| | NF400-SEW<br>NV400-SEW | 42 | 9(42) | 15(42) | 18(42) | 24(42) | 24(42) | 30(42) | 39(42) | 42 | 42 |
| | NF400-HEW<br>NV400-HEW | 65 | 9(65) | 15(65) | 18(65) | 24(65) | 24(65) | 30(65) | 39(65) | 65 | 65 |
| | NF400-REW<br>NV400-REW | 125 | 9(65) | 15(65) | 18(65) | 24(65) | 24(65) | 30(75) | 39(75) | 80 | 80 |
| | NF630-SW<br>NF630-SEW<br>NV630-SW<br>NV630-SEW | 42 | – | – | – | 24(42) | 24(42) | 30(42) | 37(42) | 42 | 42 |
| | NF630-HEW<br>NV630-HEW | 65 | – | 15(65) | 18(65) | 24(65) | 24(65) | 30(65) | 37(65) | 48(65) | 48(65) |
| | NF800-SEW<br>NV800-SEW | 42 | – | – | 18(42) | 24(42) | 24(42) | 30(42) | 37(42) | 42 | 42 |
| | NF800-HEW<br>NV800-HEW | 65 | – | – | 18(65) | 24(65) | 24(65) | 30(65) | 37(65) | 48(65) | 48(65) |
| NF・C・NV・C | NF63-CV<br>NV63-CV | 2.5 | 2.5 | 2.5 | 2.5 | 2.5 | 2.5 | 2.5 | 2.5 | 2.5 | 2.5 |
| | NF125-CV<br>NV125-CV | 10 | 9(10) | 10 | 10 | 10 | 10 | 10 | 10 | 10 | 10 |
| | NF250-CV<br>NV250-CV | 15 | 9(15) | 15 | 15 | 15 | 15 | 15 | 15 | 15 | 15 |
| | NF400-CW<br>NV400-CW | 25 | – | 15(25) | 18(25) | 25 | 25 | 25 | 25 | 25 | 25 |
| | NF630-CW<br>NV630-CW | 36 | – | – | – | 24(36) | 24(36) | 30(42) | 36 | 36 | 36 |
| | NF800-CEW | 36 | – | – | 18(36) | 24(36) | 24(36) | 30(42) | 36 | 36 | 36 |
| NF・R・U | NF125-RGV | 125 | 35(65) | 65 | 65 | 65 | 65 | 85 | 85 | 85 | 85 |
| | NF125-UV | 200 | 50(65) | 65 | 65 | 65 | 65 | 85 | 85 | 85 | 85 |
| | NF250-RGV | 125 | 9(65) | 50(65) | 65 | 65 | 65 | 85 | 85 | 85 | 85 |
| | NF250-UV | 200 | 9(65) | 65 | 65 | 65 | 65 | 85 | 85 | 85 | 85 |
| | NF400-UEW | 200 | 9(65) | 15(65) | 18(65) | 29(65) | 29(65) | 48(75) | 85 | 85 | 85 |
| | NF800-UEW | 200 | – | – | 18(65) | 24(65) | 24(65) | 30(75) | 37(75) | 68(75) | 68(75) |

Notes *1 The values in the table represent the max. rated current for both Series AE-SW air circuit breakers and branch breakers, and the selective co-ordination applies when the air circuit breakers instantaneous pick up is set to maximum.
*2 The numerals shown in parentheses are for AE-SW with MCR. (When set MCR.)

### 230VAC (IEC 60947-2)

sym.kA

| Branch breaker | Rated ultimate short-circuit breaking capacity of each breaker / Main breaker | Icu(kA) | Low-voltage air circuit breaker AE-SW | | | | | | | | |
|---|---|---|---|---|---|---|---|---|---|---|---|
| | | | AE630-SW | AE1000-SW | AE1250-SW | AE1600-SW | AE2000-SWA | AE2000-SW | AE2500-SW | AE3200-SW | AE4000-SWA |
| | | | 65 | 65 | 65 | 65 | 65 | 85 | 85 | 85 | 85 |
| NF・S・L・H・NV・S・H | NF32-SV | 7.5 | 7.5 | 7.5 | 7.5 | 7.5 | 7.5 | 7.5 | 7.5 | 7.5 | 7.5 |
| | NV32-SV | 10 | 9(10) | 10 | 10 | 10 | 10 | 10 | 10 | 10 | 10 |
| | NF63-SV<br>NV63-SV | 15 | 9(10) | 15 | 15 | 15 | 15 | 15 | 15 | 15 | 15 |
| | NF63-HV<br>NV63-HV | 25 | 9(25) | 25 | 25 | 25 | 25 | 25 | 25 | 25 | 25 |
| | NF125-SV<br>NV125-SV | 50 | 9(50) | 45(50) | 50 | 50 | 50 | 50 | 50 | 50 | 50 |
| | NF125-SEV<br>NV125-SEV | 85 | 9(65) | 45(65) | 50(65) | 50(65) | 50(65) | 85 | 85 | 85 | 85 |
| | NF125-SGV | 85 | 16(65) | 45(65) | 65 | 65 | 65 | 85 | 85 | 85 | 85 |
| | NF125-LGV | 90 | 16(65) | 45(65) | 65 | 65 | 65 | 85 | 85 | 85 | 85 |
| | NF125-HV<br>NV125-HV | 100 | 9(65) | 50(65) | 65 | 65 | 65 | 85 | 85 | 85 | 85 |
| | NF125-HGV | 100 | 16(65) | 45(65) | 65 | 65 | 65 | 85 | 85 | 85 | 85 |
| | NF160-SGV | 85 | 9.4(65) | 25(65) | 40(65) | 65 | 65 | 85 | 85 | 85 | 85 |
| | NF160-LGV | 90 | 9.4(65) | 25(65) | 40(65) | 65 | 65 | 85 | 85 | 85 | 85 |
| | NF160-HGV | 100 | 9.4(65) | 25(65) | 40(65) | 65 | 65 | 85 | 85 | 85 | 85 |
| | NF250-SV<br>NF250-SEV<br>NV250-SV<br>NV250-SEV | 85 | 9(65) | 20(65) | 22(65) | 42(65) | 42(65) | 50(85) | 85 | 85 | 85 |
| | NF250-SGV | 85 | 9.4(65) | 25(65) | 40(65) | 65 | 65 | 85 | 85 | 85 | 85 |
| | NF250-LGV | 90 | 9.4(65) | 25(65) | 40(65) | 65 | 65 | 85 | 85 | 85 | 85 |
| | NF250-HV<br>NF250-HEV<br>NV250-HV<br>NV250-HEV | 100 | 9(65) | 25(65) | 40(65) | 65 | 65 | 85 | 85 | 85 | 85 |
| | NF250-HGV | 100 | 9.4(65) | 25(65) | 40(65) | 65 | 65 | 85 | 85 | 85 | 85 |
| | NF400-SW<br>NV400-SW | 85 | – | – | 20(65) | 30(65) | 30(65) | 48(75) | 70(75) | 85 | 85 |
| | NF400-SEW<br>NV400-SEW | 85 | 9(65) | 15(65) | 20(65) | 30(65) | 30(65) | 48(75) | 70(75) | 85 | 85 |
| | NF400-HEW<br>NV400-HEW | 100 | 9(65) | 15(65) | 20(65) | 30(65) | 30(65) | 48(75) | 70(75) | 85 | 85 |
| | NF400-REW<br>NV400-REW | 150 | 9(65) | 15(65) | 20(65) | 30(65) | 30(65) | 48(75) | 70(75) | 85 | 85 |
| | NF630-SW<br>NF630-SEW<br>NV630-SW<br>NV630-SEW | 85 | – | – | – | 24(65) | 24(65) | 30(75) | 40(75) | 60(75) | 60(75) |
| | NF630-HEW<br>NV630-HEW | 100 | – | 15(65) | 18(65) | 24(65) | 24(65) | 30(75) | 40(75) | 60(75) | 60(75) |
| | NF800-SEW<br>NV800-SEW | 85 | – | – | 18(65) | 24(65) | 24(65) | 30(75) | 40(75) | 60(75) | 60(75) |
| | NF800-HEW<br>NV800-HEW | 100 | – | – | 18(65) | 24(65) | 24(65) | 30(75) | 40(75) | 60(75) | 60(75) |
| NF・C・NV・C | NF63-CV<br>NV63-CV | 7.5 | 7.5 | 7.5 | 7.5 | 7.5 | 7.5 | 7.5 | 7.5 | 7.5 | 7.5 |
| | NF125-CV<br>NV125-CV | 30 | 9(30) | 15(30) | 18(30) | 24(30) | 24(30) | 30 | 30 | 30 | 30 |
| | NF250-CV<br>NV250-CV | 36 | 9(36) | 15(36) | 18(36) | 24(36) | 24(36) | 36 | 36 | 36 | 36 |
| | NF400-CW<br>NV400-CW | 50 | – | 15(50) | 20(50) | 27(50) | 27(50) | 42(50) | 50 | 50 | 50 |
| | NF630-CW<br>NV630-CW | 50 | – | – | – | 24(50) | 24(50) | 30(50) | 40(50) | 50 | 50 |
| | NF800-CEW | 50 | – | – | 18(50) | 24(50) | 24(50) | 30(50) | 40(50) | 50 | 50 |
| NF・R・U | NF125-RGV | 150 | 65 | 65 | 65 | 65 | 65 | 85 | 85 | 85 | 85 |
| | NF125-UV | 200 | 65 | 65 | 65 | 65 | 65 | 85 | 85 | 85 | 85 |
| | NF250-RGV | 150 | 9(65) | 65 | 65 | 65 | 65 | 85 | 85 | 85 | 85 |
| | NF250-UV | 200 | 9(65) | 65 | 65 | 65 | 65 | 85 | 85 | 85 | 85 |
| | NF400-UEW | 200 | 9(65) | 15(65) | 18(65) | 29(65) | 29(65) | 48(75) | 85 | 85 | 85 |
| | NF800-UEW | 200 | – | – | 18(65) | 24(65) | 24(65) | 30(75) | 37(75) | 68(75) | 68(75) |

# 11. Combinations for Cascade Breaking

The following tables show the combinations of circuit breakers capable of cascade breaking and the cascade breaking capacities (symmetrical values, sym kA). The criteria conform to IEC 60947-2.

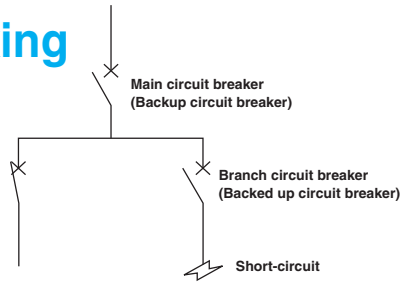


**Table 4-23-1 440VAC (IEC 60947-2)**

sym.kA

| Branch breaker | | Icu(kA) | NF-S • NV-S • NF-H • NV-H | | | | | | | | | | | | | | | | | | | | | | | NF-C • NV-C | | | | NF-R • NF-U | | | | | |
|---|---|---|---|---|---|---|---|---|---|---|---|---|---|---|---|---|---|---|---|---|---|---|---|---|---|---|---|---|---|---|---|---|---|---|---|
| Main breaker / Rated ultimate short-circuit breaking capacity of each breaker | | | NF125-SV, NV125-SV | NF125-SGV | NF125-LGV | NF125-HV, NV125-HV | NF125-HGV | NF160-SGV | NF160-LGV | NF160-HGV | NF250-SV, NV250-SV | NF250-SGV | NF250-LGV | NF250-HV, NV250-HV | NF250-HGV | NF400-SW, NV400-SW | NF400-HEW, NV400-HEW | NF400-REW, NV400-REW | NF630-SW, NV630-SW | NF630-HEW, NV630-HEW | NF630-REW | NF800-SEW, NV800-SEW | NF800-HEW, NV800-HEW | NF800-REW | NF1000-SEW, NF1250-SEW, NF1600-SEW | NF250-CV, NV250-CV | NF400-CW, NV400-CW | NF630-CW, NV630-CW | NF800-CEW | NF125-RGV, NV125-RGV | NF125-UV | NF250-RGV | NF250-UV | NF400-UEW | NF800-UEW |
| | | | 25 | 36 | 50 | 50 | 65 | 36 | 50 | 65 | 36 | 36 | 50 | 65 | 65 | 42 | 65 | 125 | 42 | 65 | 125 | 42 | 65 | 125 | 85 | 15 | 25 | 36 | 36 | 125 | 200 | 125 | 200 | 200 | 200 |
| NF-S • NV-S • NF-L • NF-H • NV-H | NF32-SV | 2.5 | 10 | 14 | 14 | 14 | 14 | 5 | 5 | 5 | 5 | 5 | 5 | 5 | 5 | – | – | – | – | – | – | – | – | – | – | 5 | – | – | – | 35 | 125 | 35 | 50 | – | – |
| | NV32-SV | 5 | 14 | 14 | 14 | 14 | 14 | 10 | 10 | 10 | 10 | 10 | 10 | 10 | 10 | 7.5 | 7.5 | 7.5 | 7.5 | 7.5 | 7.5 | – | – | – | – | – | – | – | – | 50 | 125 | 35 | 50 | – | – |
| | NF63-SV | 7.5 | 14 | 14 | 14 | 20 | 20 | 15 | 15 | 15 | 15 | 15 | 15 | 10 | 15 | 15 | 15 | 15 | 10 | 10 | 10 | 10 | 10 | 10 | – | – | 10 | 10 | – | 50 | 125 | 50 | 50 | 10 | 10 |
| | NV63-SV | 7.5 | 14 | 14 | 14 | 20 | 20 | 10 | 10 | 10 | 10 | 10 | 10 | 10 | 10 | – | – | – | – | – | – | – | – | – | – | – | 10 | 10 | – | 50 | 125 | 50 | 50 | – | – |
| | NF63-HV<br>NV63-HV | 10 | 20 | 30 | 30 | 30 | 30 | 18 | 18 | 18 | 18 | 18 | 18 | 18 | 18 | 15 | 15 | 15 | 14 | 14 | 14 | – | – | – | – | – | – | – | – | 125 | 125 | 50 | 50 | – | – |
| | NF125-SV<br>NV125-SV | 25 | – | 36 | 36 | 50 | 50 | 36 | 36 | 50 | – | 36 | 50 | 42 | 50 | 35 | 35 | 35 | 35 | 35 | 35 | 30 | 35 | 35 | 30 | – | – | – | – | 125 | 200 | 125 | 200 | 50 | 35 |
| | NF125-SGV | 36 | – | – | 50 | – | 50 | – | 50 | 50 | – | – | 50 | – | 50 | – | 50 | 50 | – | 50 | 50 | – | 50 | 50 | – | – | – | – | – | 125 | 200 | 125 | 200 | 50 | – |
| | NF125-LGV | 50 | – | – | – | – | – | – | – | – | – | – | – | – | – | – | – | – | – | – | – | – | – | – | – | – | – | – | – | 125 | 200 | 125 | 200 | 50 | – |
| | NF125-HV<br>NV125-HV | 50 | – | – | – | – | 65 | – | – | 65 | – | – | – | – | 65 | – | 65 | 65 | – | 65 | 65 | – | 65 | 65 | – | – | – | – | – | 125 | 200 | 125 | 200 | 200 | 85 |
| | NF125-HGV | 65 | – | – | – | – | – | – | – | – | – | – | – | – | – | – | – | – | – | – | – | – | – | – | – | – | – | – | – | 125 | 200 | 125 | 200 | 200 | 85 |
| | NF160-SGV | 36 | – | – | – | – | – | – | – | – | – | – | – | – | – | – | 50 | 50 | – | 50 | 50 | – | 50 | 50 | 50 | – | – | – | – | – | – | 125 | 200 | 85 | 85 |
| | NF160-LGV | 50 | – | – | – | – | – | – | – | 65 | – | – | – | – | 65 | – | 65 | 65 | – | 65 | 65 | – | 65 | 65 | 65 | – | – | – | – | – | – | 125 | 200 | 85 | 85 |
| | NF160-HGV | 65 | – | – | – | – | – | – | – | – | – | – | – | – | – | – | – | – | – | – | – | – | – | – | – | – | – | – | – | – | – | 125 | 200 | 200 | 200 |
| | NF250-SV<br>NV250-SV | 36 | – | – | – | – | – | – | – | – | – | – | – | – | – | – | 50 | 50 | – | 50 | 50 | – | 50 | 50 | – | – | – | – | – | – | – | 125 | 200 | 85 | 85 |
| | NF250-SGV | 36 | – | – | – | – | – | – | – | – | – | – | – | – | – | – | 50 | 50 | – | 50 | 50 | – | 50 | 50 | 50 | – | – | – | – | – | – | 125 | 200 | 85 | 85 |
| | NF250-LGV | 50 | – | – | – | – | – | – | – | – | – | – | – | – | 65 | – | 65 | 65 | – | 65 | 65 | – | 65 | 65 | – | – | – | – | – | – | – | 125 | 200 | 200 | 200 |
| | NF250-HV<br>NV250-HV | 65 | – | – | – | – | – | – | – | – | – | – | – | – | – | – | – | – | – | – | – | – | – | – | – | – | – | – | – | – | – | 125 | 200 | 200 | 200 |
| | NF250-HGV | 65 | – | – | – | – | – | – | – | – | – | – | – | – | – | – | – | – | – | – | – | – | – | – | – | – | – | – | – | – | – | 125 | 200 | 200 | 200 |
| | NF400-SW<br>NF400-SEW<br>NV400-SW<br>NV400-SEW | 42 | – | – | – | – | – | – | – | – | – | – | – | – | – | – | 65 | 65 | – | 65 | 65 | – | 65 | 65 | – | – | – | – | – | – | – | – | – | 200 | 200 |
| | NF630-SW<br>NF630-SEW<br>NV630-SW<br>NV630-SEW | 42 | – | – | – | – | – | – | – | – | – | – | – | – | – | – | – | – | – | 65 | 65 | – | 65 | 65 | – | – | – | – | – | – | – | – | – | – | 200 |
| NF-C • NV-C | NF63-CV<br>NV63-CV | 2.5 | 10 | 14 | 14 | 14 | 14 | 5 | 5 | 5 | 5 | 5 | 5 | 5 | 5 | – | – | – | – | – | – | – | – | – | – | 5 | – | – | – | 35 | 125 | 35 | 50 | 5 | – |
| | NF125-CV<br>NV125-CV | 10 | 20 | 30 | 30 | 30 | 30 | 14 | 14 | 14 | 14 | 14 | 14 | 14 | 14 | 14 | 14 | 14 | 14 | 14 | 14 | 14 | 14 | 14 | – | – | 14 | 14 | 14 | 125 | 200 | 50 | 125 | 14 | 14 |
| | NF250-CV<br>NV250-CV | 15 | – | – | – | – | – | – | – | – | – | – | – | – | – | 30 | 30 | 30 | – | – | – | – | – | – | – | – | – | – | – | – | – | 125 | 200 | 50 | – |
| | NF400-CW<br>NV400-CW | 25 | – | – | – | – | – | – | – | – | – | – | – | – | – | 35 | 35 | 35 | 35 | 35 | 35 | 35 | 35 | 35 | 30 | – | – | – | – | – | – | – | – | 50 | 50 |
| | NF630-CW<br>NV630-CW | 36 | – | – | – | – | – | – | – | – | – | – | – | – | – | – | – | – | 42 | 50 | 50 | 42 | 50 | 50 | 42 | – | – | – | – | – | – | – | – | – | 200 |

Note Rated currents of main breakers are maximum values.

**Table 4-23-2 230VAC (IEC 60947-2)**

sym.kA

| Branch breaker | Main breaker / Rated ultimate short-circuit breaking capacity of each breaker | Icu(kA) | NF-S • NV-S • NF-H • NV-H | | | | | | | | | | | | | | | | | | | | | | | NF-C • NV-C | | | | NF-R • NF-U | | | | | |
|---|---|---|---|---|---|---|---|---|---|---|---|---|---|---|---|---|---|---|---|---|---|---|---|---|---|---|---|---|---|---|---|---|---|---|---|
| | | | NF125-SV, NV125-SV | NF125-SGV | NF125-LGV | NF125-HV, NV125-HV | NF125-HGV | NF160-SGV | NF160-LGV | NF160-HGV | NF250-SV, NV250-SV | NF250-SGV | NF250-LGV | NF250-HV, NV250-HV | NF250-HGV | NF400-SW, NV400-SW | NF400-HEW, NV400-HEW | NF400-REW, NV400-REW | NF630-SW, NV630-SW | NF630-HEW, NV630-HEW | NF630-REW | NF800-SEW, NV800-SEW | NF800-HEW, NV800-HEW | NF800-REW | NF1000-SEW, NF1250-SEW, NF1600-SEW | NF250-CV, NV250-CV | NF400-CW, NV400-CW | NF630-CW, NV630-CW | NF800-CEW | NF125-RGV, NV125-RGV | NF125-UV | NF250-RGV | NF250-UV | NF400-UEW | NF800-UEW |
| | | | 50 | 85 | 90 | 100 | 100 | 85 | 90 | 100 | 85 | 85 | 90 | 100 | 100 | 85 | 100 | 150 | 85 | 100 | 150 | 85 | 100 | 150 | 125 | 36 | 50 | 50 | 50 | 150 | 200 | 150 | 200 | 200 | 200 |
| NF-S • NV-S • NF-L • NF-H • NV-H | NF32-SV | 7.5 | 42 | 50 | 50 | 50 | 50 | 10 | 10 | 10 | 10 | 10 | 10 | 10 | 10 | – | – | – | – | – | – | – | – | – | – | – | – | – | – | 125 | 200 | 35 | 50 | – | – |
| | NV32-SV | 10 | 42 | 50 | 50 | 50 | 50 | 35 | 35 | 35 | 35 | 35 | 35 | 35 | 35 | 14 | 14 | 14 | 14 | 14 | 14 | – | – | – | – | 25 | 14 | 14 | – | 125 | 200 | 35 | 50 | – | – |
| | NF63-SV | 15 | 42 | 85 | 85 | 85 | 85 | 35 | 35 | 35 | 35 | 35 | 35 | 35 | 35 | 30 | 30 | 30 | 30 | 30 | 30 | – | – | – | – | 25 | – | – | – | 125 | 200 | 85 | 125 | – | – |
| | NV63-SV | 15 | 42 | 85 | 85 | 85 | 85 | 35 | 35 | 35 | 35 | 35 | 35 | 35 | 35 | – | – | – | – | – | – | – | – | – | – | 25 | – | – | – | 125 | 200 | 85 | 125 | – | – |
| | NF63-HV<br>NV63-HV | 25 | 50 | 85 | 90 | 100 | 100 | 50 | 50 | 50 | 50 | 50 | 50 | 50 | 50 | 50 | 50 | 50 | 50 | 50 | 50 | – | – | – | – | – | 30 | 30 | – | 125 | 200 | 85 | 125 | – | – |
| | NF125-SV<br>NV125-SV | 50 | – | 85 | 90 | 100 | 100 | 85 | 85 | 85 | – | 85 | 85 | 85 | 85 | 85 | 85 | 85 | 85 | 85 | 85 | – | – | – | – | – | – | – | – | 125 | 200 | 125 | 200 | 200 | 125 |
| | NF125-SGV | 85 | – | – | – | 100 | – | – | – | – | – | – | – | – | – | – | – | – | – | – | – | – | – | – | – | – | – | – | – | 125 | 200 | 125 | 200 | 200 | 125 |
| | NF125-LGV | 90 | – | – | – | – | – | – | – | – | – | – | – | – | – | – | – | – | – | – | – | – | – | – | – | – | – | – | – | 125 | 200 | 125 | 200 | 200 | 200 |
| | NF125-HV<br>NV125-HV | 100 | – | – | – | – | – | – | – | – | – | – | – | – | – | – | – | – | – | – | – | – | – | – | – | – | – | – | – | 125 | 200 | 125 | 200 | 200 | 125 |
| | NF125-HGV | 100 | – | – | – | – | – | – | – | – | – | – | – | – | – | – | – | – | – | – | – | – | – | – | – | – | – | – | – | 125 | 200 | 125 | 200 | 200 | 200 |
| | NF160-SGV | 85 | – | – | – | – | – | – | – | – | – | – | – | – | – | – | – | – | – | – | – | – | – | – | – | – | – | – | – | – | – | 125 | 200 | 200 | 125 |
| | NF160-LGV | 90 | – | – | – | – | – | – | – | – | – | – | – | – | – | – | – | – | – | – | – | – | – | – | – | – | – | – | – | – | – | 125 | 200 | 200 | 200 |
| | NF160-HGV | 100 | – | – | – | – | – | – | – | – | – | – | – | – | – | – | – | – | – | – | – | – | – | – | – | – | – | – | – | – | – | 125 | 200 | 200 | 200 |
| | NF250-SV<br>NV250-SV | 85 | – | – | – | – | – | – | – | – | – | – | – | – | – | – | – | – | – | – | – | – | – | – | – | – | – | – | – | – | – | 125 | 200 | 200 | 125 |
| | NF250-SGV | 85 | – | – | – | – | – | – | – | – | – | – | – | – | – | – | – | – | – | – | – | – | – | – | – | – | – | – | – | – | – | 125 | 200 | 200 | 125 |
| | NF250-LGV | 90 | – | – | – | – | – | – | – | – | – | – | – | – | – | – | – | – | – | – | – | – | – | – | – | – | – | – | – | – | – | 125 | 200 | 200 | 200 |
| | NF250-HV<br>NV250-HV | 100 | – | – | – | – | – | – | – | – | – | – | – | – | – | – | – | – | – | – | – | – | – | – | – | – | – | – | – | – | – | 125 | 200 | 200 | 200 |
| | NF250-HGV | 100 | – | – | – | – | – | – | – | – | – | – | – | – | – | – | – | – | – | – | – | – | – | – | – | – | – | – | – | – | – | 125 | 200 | 200 | 200 |
| | NF400-SW<br>NF400-SEW<br>NV400-SW<br>NV400-SEW | 85 | – | – | – | – | – | – | – | – | – | – | – | – | – | – | – | – | – | – | – | – | – | – | 100 | – | – | – | – | – | – | – | – | 200 | 200 |
| | NF630-SW<br>NF630-SEW<br>NV630-SW<br>NV630-SEW | 85 | – | – | – | – | – | – | – | – | – | – | – | – | – | – | – | – | – | – | – | – | – | – | 100 | – | – | – | – | – | – | – | – | – | 200 |
| NF-C • NV-C | NF63-CV<br>NV63-CV | 7.5 | 35 | 50 | 50 | 50 | 50 | 10 | 10 | 10 | 10 | 10 | 10 | 10 | 10 | – | – | – | – | – | – | – | – | – | – | – | – | – | – | 125 | 200 | 35 | 50 | – | – |
| | NF125-CV<br>NV125-CV | 30 | 35 | 85 | 85 | 85 | 85 | 50 | 50 | 50 | 50 | 50 | 50 | 50 | 50 | 50 | 50 | 50 | 50 | 50 | 50 | 50 | – | – | – | – | – | – | – | 125 | 200 | 85 | 125 | 50 | – |
| | NF250-CV<br>NV250-CV | 36 | – | – | – | – | – | – | – | – | 50 | 50 | 50 | 50 | 50 | 50 | 50 | 50 | 50 | 50 | 50 | 50 | – | – | – | – | – | – | – | – | – | 125 | 200 | 200 | 50 |
| | NF400-CW<br>NV400-CW | 50 | – | – | – | – | – | – | – | – | – | – | – | – | – | 85 | 85 | 85 | 85 | 85 | 85 | 85 | 85 | 85 | 85 | – | – | – | – | – | – | – | – | 200 | 200 |
| | NF630-CW<br>NV630-CW | 50 | – | – | – | – | – | – | – | – | – | – | – | – | – | – | – | – | 85 | 85 | 85 | 85 | 85 | 85 | 85 | – | – | – | – | – | – | – | – | – | 200 |
| BH | BH<br>BH-P | 2.5 | 30 | 42 | 42 | 42 | 42 | 7.5 | 7.5 | 7.5 | 5 | 7.5 | 7.5 | 7.5 | – | – | – | – | – | – | – | – | – | – | – | 5 | – | – | – | 125 | 200 | – | – | – | – |

Note Rated currents of main breakers are maximum values.

# 12. International Standard Comformance List

## 12.1 UL and CSA Approval Product

### ●UL (Underwriter's Laboratories) Standards: UL 489, UL 1077

UL is an organization in the US which establishes safety standards, i.e. UL Standards, conducts safety verification test based on the UL Standards, issues the certificates to approved products and allows the manufacturers to attach the certification mark to the products. The UL certification mark has been spread widely in the US. Some states and cities oblige manufacturers to receive the UL certification. When devices, control panels and machines are exported to the US, these products must be UL certified. UL certified products have received UL Recognition or UL Listing in conformity to UL Standards (UL 489, UL1077) and allowed to be used in control panels and machines to be exported to the US.

**: UL Recognition**
Refers to component certification for products designed to be built in other products and devices. UL recognized products can be used in control panels, machine tools and control units.

**: UL Listing**
Refers to product certification for products which can be sold directly to end-users and used by end-users. These products can be used also as built-in components in control panels, machine tools and control units. Some models vary in external dimensions and terminal structure from standard models. Please refer to the page of UL listed products for details.

### ●CSA (Canadian Standard Association) Standards: CSA C22.2 No.5-02

The CSA Standards are product safety standards established by CSA. In Canada, the safety of electric products is regulated by the state laws, and some state laws prescribe that circuit breakers shall be certified by the CSA Standards. Therefore, when devices, control panels and machines are exported to Canada, these products must be CSA certified. UL certified products have received CSA certification from the testing body UL and allowed to be used in control panels and machines to be exported to Canada. UL has been authorized as a testing, certification and quality certification body by SCC, and CSA certified products tested by UL have been approved by the safety regulations in all states of Canada. It is allowed to attach the following certification marks to products certified by both UL and CSA. (It is also allowed to attach the separate marks for the US and Canada as before.)

**: Recognition for US and Canada**
UL and CSA recognition of components by testing body UL

**: Listing for US and Canada**
UL and CSA recognition of components by testing body UL

## 12.2 CCC (China Compulsory Certification) Approval Product

Low-voltage circuit breakers are designated as products to be compulsorily certified in China. To export such products to China and sell them in China, it is necessary to obtain the CCC certification.

## 12.3 Corresponding to EC (European Community) Directive

### ●Corresponding to LVD (Low Voltage Directive)

**(1) When using a low voltage circuit breaker as a component and indicating conformity with the EC Directives**
The CE Marking is required when a low voltage circuit breaker is distributed as a single device in EU. However, when the CE Mark is indicated on a machine tool or a control unit, it is unnecessary to affix the CE Mark to the low-voltage circuit breaker used as a built-in component. When the CE Mark is indicated on a machine tool or a control unit, it is recommended to use a product certified by a third party shown in Item (3) (TÜV certified product) as a low voltage circuit breaker.

**(2) Measures for export of low voltage circuit breaker as single unit**
When exporting a low-voltage circuit breaker as a single unit in EU, the circuit breaker is covered by the Low Voltage Directive. The certification of conformity with the Low Voltage Directive is self-declared as a rule. The applicable product standards are shown below.
EN 60947-2 Low-voltage switchgear and controlgear-Part 2: Circuit-breakers
EN 60934 Circuit-breakers for equipment (CBE)

**(3) Models certified by third party (TÜV certified products)**
When the CE Mark is indicated on a machine tool or a control unit, it is recommended to use a low voltage circuit breaker certified by a third party (TÜV certified product) as a built-in component.

### ●Corresponding to EMC (Electromagnetic Compatibility) Directive

The Directive prescribes that products shall not emit high-intensity radio waves to the outside and shall not be affected by external electromagnetic waves. Molded case circuit breakers (electronic type) and earth leakage circuit breakers are covered by the EMC Directive.

### ●Corresponding to Machinery Directive

Low voltage circuit breakers are components used in equipment, such as machine tools and control units, and are not covered by any machinery directive. When the CE Mark is indicated on a machine tool or a control unit, it is recommended to use a low voltage circuit breaker certified by a third party (TÜV certified product) as a built-in component.

## ●Molded Case Circuit Breakers and Motor Protection Breakers

| Specifications | Class | Applicable Models and Assignments | North American Safety Mark | | | | | Compulsory Mark | | Third Party Mark | Classification Society (*1) |
|---|---|---|---|---|---|---|---|---|---|---|---|
| | | | UL Stgandards | | | CSA Standards | | CCC | CE | TÜV Rheinland | NK |
| | | | USA | | | Canada | | China | Europe | Germany | Japan |
| General | C | NF30-CS | – | – | – | – | – | ● | ● | ● | ● |
| | | NF63-CV, NF125-CV | – | – | – | – | – | ● | ●(Self Declaration) | – | ● |
| | | NF250-CV | – | – | – | – | – | ● | ● | ● | ● |
| | | NF400-CW, NF630-CW, NF800-CEW | – | – | – | – | – | ● | ●(Self Declaration) | – | ● |
| | S | NF32-SV, NF63-SV, NF125-SV | – | – | – | – | – | ● | ●(Self Declaration) | – | ● |
| | | NF125-SEV | – | – | – | – | – | ● | ●(Self Declaration) | – | – |
| | | NF250-SV | – | – | – | – | – | ● | ● | ● (Except for 4P) | ● |
| | | NF125-SGV, NF160-SGV, NF250-SGV, NF250-SEV | – | – | – | – | – | ● | ●(Self Declaration) | – | – |
| | | NF400-SW, NF630-SW<br>NF400-SEW, NF630-SEW<br>NF800-SEW, NF800-SDW | – | – | – | – | – | ● | ●(Self Declaration) | – | ● |
| | | NF1000-SEW, NF1250-SEW | – | – | – | – | – | ● | ●(Self Declaration) | – | ● |
| | | NF1600-SEW | – | – | – | – | – | ● | ●(Self Declaration) | – | – |
| | | NF1250-SDW, NF1600-SDW | – | – | – | – | – | – | ●(Self Declaration) | – | – |
| | L/H/R | NF63-HV | – | – | – | – | – | ● | ●(Self Declaration) | – | ● |
| | | NF125-HV | – | – | – | – | – | ● | ●(Self Declaration) | – | ● |
| | | NF125-HEV | – | – | – | – | – | ● | ●(Self Declaration) | – | – |
| | | NF250-HV | – | – | – | – | – | ● | ●(Self Declaration) | – | ● |
| | | NF125-LGV, NF125-HGV, NF160-LGV, NF250-LGV, NF250-HGV, NF250-HEV, NF125-RGV, NF250-RGV | – | – | – | – | – | ● | ●(Self Declaration) | – | – |
| | | NF400-HEW, NF400-REW<br>NF630-HEW, NF630-REW<br>NF800-HEW, NF800-REW | – | – | – | – | – | ● | ●(Self Declaration) | – | ● |
| | U | NF125-UV | – | – | – | – | – | – | ●(Self Declaration) | – | ● |
| | | NF250-UV, NF400-UEW | – | – | – | – | – | – | ●(Self Declaration) | – | ● |
| | | NF800-UEW | – | – | – | – | – | – | ●(Self Declaration) | – | – |
| | Motor Protection | NF32-SV MB, NF63-CV MB,<br>NF63-SV MB, NF125-SV MB | – | – | – | – | – | ● | ●(Self Declaration) | – | ● |
| | | NF250-SV MB | – | – | – | – | – | ● | ● | ● | ● |
| UL | UL 489 Listed | NF50-SVFU, NF100-CVFU | – | – | – | ● | – | ● | ● | ● | – |
| | | NF125-SVU, NF125-HVU | – | – | – | ● | – | ● | ● | ● | – |
| | | NF225-CWU | – | – | – | ● | – | ●(Except for 250A) | ● | ●(Except for 250A) | – |
| | | NF250-SVU, NF250-HVU | – | – | – | ● | – | ● | ● | ● | – |
| | | NF-SKW, NF-SLW | – | – | – | ● | – | – | ● | ● | – |

Note *1 Except for 4 poles breaker.
Remark: 1. KC (Korea Certification) Mark and GOST-R (Russian Standards) approval products are prepared. Please inquire details.

## ●Earth Leakage Circuit Breakers

| Specifications | Class | Applicable Models and Assignments | North American Safety Mark | | | | | Compulsory Mark | | Third Party Mark | Classification Society |
|---|---|---|---|---|---|---|---|---|---|---|---|
| | | | UL Stgandards | | | CSA Standards | | CCC | CE | TÜV Rheinland | NK |
| | | | USA | | | Canada | | China | Europe | Germany | Japan |
| CE and CCC | C | NV63-CV, NV125-CV | – | – | – | – | – | ● (Except for 2P) | ●(Self Declaration) | – | – |
| | | NV250-CV | – | – | – | – | – | ● | ● | ● | – |
| | | NV400-CW, NV630-CW | – | – | – | – | – | ● | ●(Self Declaration) | – | – |
| | S | NV32-SV, NV63-SV | – | – | – | – | – | ● | ●(Self Declaration) | – | – |
| | | NV125-SV | – | – | – | – | – | ● | ●(Self Declaration) | – | – |
| | | NV250-SV | – | – | – | – | – | ● | ● | ● | – |
| | | NV125-SEV, NV250-SEV, NV400-SW, NV400-SEW, NV630-SW, NV630-SEW, NV800-SEW | – | – | – | – | – | ● | ●(Self Declaration) | – | – |
| | H/R | NV63-HV | – | – | – | – | – | ● | ●(Self Declaration) | – | – |
| | | NV125-HV | – | – | – | – | – | ● | ●(Self Declaration) | – | – |
| | | NV125-HEV, NV250-HV, NV250-HEV | – | – | – | – | – | ● | ●(Self Declaration) | – | – |
| | | NV400-HEW, NV400-REW, NV630-HEW, NV800-HEW | – | – | – | – | – | – | – | – | – |
| UL | UL 489 Listed | NV50-SVFU, NV100-CVFU | – | – | – | ● | – | ● | ● | ● | – |
| | | NV125-SVU, NV125-HVU | – | – | – | ● | – | ● | ● | ● | – |
| | | NV250-SVU, NV250-HVU | – | – | – | ● | – | ● | ● | ● | – |

Remark: 1. KC (Korea Certification) Mark and GOST-R (Russian Standards) approval products are prepared. Please inquire details.

## ●Miniature Circuit Breakers

| Specifications | Class | Applicable Models | Compulsory Mark | |
|---|---|---|---|---|
| | | | CCC | CE |
| | | | China | Europe |
| IEC | BH | BH | – | – |
| | | BH-P | – | – |
| | | BH-S | – | – |
| | | BH-PS | – | – |
| General | DIN | BH-D6 | ● | ●(Self Declaration) |
| | | BH-D10 | ● | ●(Self Declaration) |
| | | BH-DN | ● | ●(Self Declaration) |
| | | BV-D | ● | ●(Self Declaration) |
| | | BV-DN | ● | ●(Self Declaration) |
| | | KB-D | ● | ●(Self Declaration) |

## ●Circuit Protectors

| Specifications | Class | Applicable Models and Assignments | North American Safety Mark | | | | | Compulsory Mark | | Third Party Mark | Classification Society |
|---|---|---|---|---|---|---|---|---|---|---|---|
| | | | UL Stgandards | | | CSA Standards | | CCC | CE | TÜV Rheinland | NK |
| | | | USA | | | Canada | | China | Europe | Germany | Japan |
| General | CP | CP30-BA | – | – | ● | – | – | ● | ●(EN 60934)<br>●(EN 60947-2)<br>(Self-Declaration) | ●(EN 60934)<br>– | – |
| | | CP-S | – | – | – | – | – | – | – | – | – |

Remark: 1. KC (Korea Certification) Mark and GOST-R (Russian Standards) approval products are prepared. Please inquire details.

## ●Air Circuit Breakers

| Specifications | Class | Applicable Models | Assignments | North American Safety Mark | | | | | Compulsory Mark | | Third Party Mark |
|---|---|---|---|---|---|---|---|---|---|---|---|
| | | | | UL Stgandards | | | CSA Standards | | CCC | CE | TÜV Rheinland |
| | | | | USA | | | Canada | | China | Europe | Germany |
| IEC | SW | AE630-SW, AE1000-SW<br>AE1250-SW, AE1600-SW<br>AE2000-SWA, AE2000-SW<br>AE2500-SW, AE3200-SW<br>AE4000-SWA, AE4000-SW<br>AE5000-SW, AE6300-SW | IEC 60947-2<br>or<br>JIS C 8201-2-1 | – | – | – | – | – | – | ●(Self Declaration) | – |
| | SH | AE630-SH, AE1000-SH<br>AE1250-SH, AE1600-SH<br>AE2000-SH, AE2500-SH<br>AE3200-SH | IEC 60947-2 | – | – | – | – | – | – | ●(Self Declaration) | – |
| JEC | SW | AE630-SW, AE1000-SW<br>AE1250-SW, AE1600-SW<br>AE2000-SWA, AE2000-SW<br>AE2500-SW, AE3200-SW<br>AE4000-SWA, AE4000-SW<br>AE5000-SW, AE6300-SW | JEC 160 | – | – | – | – | – | – | – | – |
| | SH | AE630-SH, AE1000-SH<br>AE1250-SH, AE1600-SH<br>AE2000-SH, AE2500-SH<br>AE3200-SH | | – | – | – | – | – | – | – | – |
| CCC | SW | AE630-SW, AE1000-SW<br>AE1250-SW, AE1600-SW<br>AE2000-SWA, AE2000-SW<br>AE2500-SW, AE3200-SW<br>AE4000-SWA, AE4000-SW<br>AE5000-SW, AE6300-SW | CCC | – | – | – | – | – | ● | ●(Self Declaration) | – |

Note *1 Except for four poles breaker.
Remark: 1. GOST-R (Russian Standards) approval products are prepared. Please inquire details.

## ●Molded Case Circuit Breakers , Motor Protection Breakers, Air Circuit Breakers, Circuit Protectors and Miniature Circuit Breakers (Classification Society)

| Specifications | Class | Applicable Models | Classification societies (Note) | | | | | | |
|---|---|---|---|---|---|---|---|---|---|
| | | | NK | LR | ABS | GL | BV | CCS | DNV |
| | | | Japan | United Kingdam | USA | Germany | France | China | Norway |
| General | C | NF30-CS | ● | ● | ● | – | – | – | – |
| | | NF63-CV, NF125-CV | ● | ● | ● | ● | ● | Scheduled to be certified | ● |
| | | NF250-CV | ● | ● | ● | ● | ● | Scheduled to be certified | ● |
| | | NF400-CW, NF630-CW | ● | ● | ● | ● | ● | – | – |
| | | NF800-CEW | ● | ● | ● | ● | ● | – | ● |
| | S | NF32-SV, NF63-SV, NF125-SV | ● | ● | ● | ● | ● | Scheduled to be certified | ● |
| | | NF250-SV | ● | ● | ● | ● | ● | Scheduled to be certified | ● |
| | | NF400-SW, NF630-SW<br>NF400-SEW, NF630-SEW<br>NF800-SEW | ● | ● | ● | ● | ● | ● | –<br>● |
| | | NF1000-SEW, NF1250-SEW | ● | ● | ● | – | – | – | – |
| | H/R | NF63-HV, NF125-HV | ● | ● | ● | ● | ● | Scheduled to be certified | ● |
| | | NF250-HV | ● | ● | ● | ● | ● | Scheduled to be certified | ● |
| | | NF400-HEW, NF400-REW | | | | | | ●<br>(HEW) | – |
| | | NF630-HEW, NF630-REW<br>NF800-HEW, NF800-REW | | | | | | – | |
| | U | NF125-UV, NF250-UV | ● | ● | ● | ● | ● | Scheduled to be certified | ● |
| | | NF400-UEW, NF800-UEW | | | | | | – | – |
| | Motor Protection | NF32-SV MB, NF63-CV MB<br>NF63-SV MB, NF125-SV MB<br>NF250-SV MB | ● | ● | ● | ● | ● | Scheduled to be certified | ● |
| | AE | AE630-SW, AE1000-SW<br>AE1250-SW, AE1600-SW<br>AE2000-SWA, AE2000-SW<br>AE2500-SW, AE3200-SW<br>AE4000-SWA | ● | ● | ● | ● | ● | ● | ● |
| | | AE4000-SW, AE5000-SW, AE6300-SW | ● | ● | ● | ● | ● | – | – |
| | CP | CP30-BA | ● | – | – | – | – | – | – |
| | BH | BH-P | ● | ● | ● | ● | ● | – | – |

Remark: 1. Four poles breakers does not acquire Classification Society approval.

# 1. Electric Shock Protection

The safety standards for current passing through the human body are determined based on physiological phenomena as shown below.

●In places where secondary accidents may be caused by electric shock: Area below the curve b

●In places where secondary accidents will not be caused by electric shock: Area below the curve c1

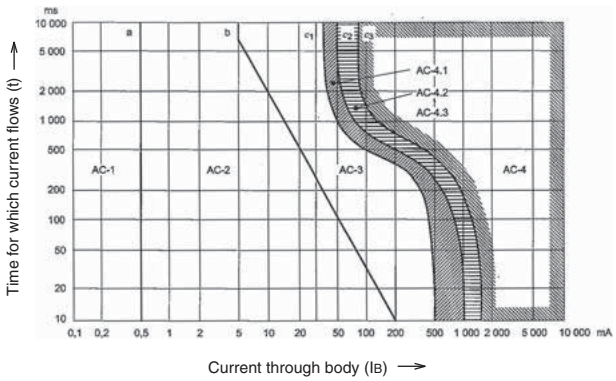


**Fig. 4.17 Influence of AC (15 Hz to 100 Hz) on human body (IEC/TS60479-1)**

# 2. ELCB Grounding Method

Select the rated sensitivity current based on the grounding method, purpose of protection and protection ground resistance value of load device. If the line is excessively long, the circuit breaker may operate unnecessarily owing to leakage current. Calculate the leakage current referring to Table 4-25. In this case, it is common to select sensitivity current approx. 10 times as high as the leakage current.

**Table 4-24**

| Type of earthing system | TN system | | | TT system | IT system |
|---|---|---|---|---|---|
| | TN-C system | TN-S system | TN-C-S system | | |
| Typical arrangement | 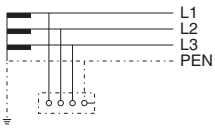  | 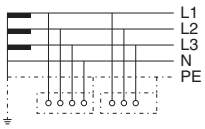  | 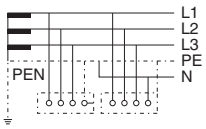  | 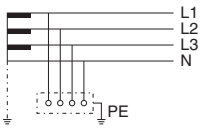  | 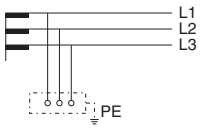  |
| Protective condition | The touch voltage is limited to 50V. | | | | |
| | $Zs \times Ia \leq 50$ V<br>Zs: fault loop impedance (Ω)<br>Ia: current causing the automatic operation of the disconnecting device within the time as below (A)<br>$U_0$: nominal line to earth voltage (V) | | | $R_A \times I_{\Delta n} \leq 50$ V<br>$R_A$: sum of the resistances of the earth electrode and the protective conductor (Ω)<br>$I_{\Delta n}$: rated current sensitivity (A) | Id × $R_A \leq 50$ V<br>$R_A$: sum of the resistances of the earth electrode and the protective conductor (Ω)<br>Id: first fault current (A) |
| | Maximum disconnection times (sec) | | | | |
| Earth leakage protective device | - MCCBs<br>Not ELCBs | - MCCBs<br>- ELCBs | - MCCBs<br>- ELCBs<br>(except in TN-C zone) | - ELCBs | - Insulation monitoring devices + ELCBs |

| $U_0$ AC | Branch circuits rated 32 A and less | | | | Others |
|---|---|---|---|---|---|
| | 120 V | 230 V | 400 V | Over 400 V | |
| TN system | 0.8 | 0.4 | 0.2 | 0.1 | 5 |
| TT system | 0.3 | 0.2 | 0.07 | 0.04 | 1 |

**Table 4-25 Leakage current when 600-V vinyl insulated wire is laid on 1-km Δ-connected 3-phase 3-wire 200-V line**

| Distance from grounded part / Wiring work / Wire size | Ⓐ 4 m or more | Ⓑ 10 cm or more | Ⓒ 1.5 mm or more | Ⓓ In close contact |
|---|---|---|---|---|
| | • Wiring on first floor ceiling of wooden building<br>• Wiring on second and higher floors of wooden building<br>• Aerial wiring (Except Ⓒ and Ⓓ) | • Wiring in RC building<br>• Wiring with vinyl tube and exposed wiring in steel frames (Except Ⓒ and Ⓓ) | • Vinyl tube burying<br>• Vinyl tube laying in close contact with steel frames in steel building | • Wiring in metallic conduit<br>• Wiring in metallic duct |
| 8 mm² or less | 0.60 mA/km | 1.29 mA/km | 19.9 mA/km | 100 mA/km |
| 14 | 0.66 | 1.44 | 22.1 | 110 |
| 22 | 0.72 | 1.55 | 23.9 | 120 |
| 38 | 0.81 | 1.75 | 26.9 | 135 |
| 60 | 0.99 | 2.14 | 32.9 | 165 |
| 100 | 1.14 | 2.46 | 37.9 | 189 |
| 150 | 1.25 | 2.72 | 41.8 | 209 |
| 250 | 1.46 | 3.16 | 48.6 | 243 |
| 325 | 1.52 | 3.29 | 50.7 | 253 |
| 500 | 1.71 | 3.69 | 56.8 | 284 |

Notes *1 The leakage current on rubber insulated wire (RB) is about 70% of the above values, and that on 3-core 600-V cross-linked polyethylene insulated wire (CV) is about 50%.
*2 At 50 Hz, the values are 84% of the above values.
*3 To obtain the leakage current on another line, multiply the values shown in Table 4-25 by the magnification shown in Table 4-26.
*4 To determine the line length, add the length of all wires after ELCB installation point.

**Table 4-26 Leakage current conversion table**

| Type of line | Magnification |
|---|---|
| Single-phase 100-V line | 0.3 |
| Single-phase 3-wire 200-V line | 0.3 |
| 3-phase 415-V line (⅄ connection) | 0.7 |

# 3. Rated Voltage and Number of Poles

Select the rated voltage and number of poles according to the circuit voltage and type. The following table shows the standard circuit voltage values. However, even at special voltage, if the voltage including the circuit voltage fluctuation is within the voltage range shown right, the leakage protection device will operate.

Voltage fluctuation range in which leakage protection function is operable

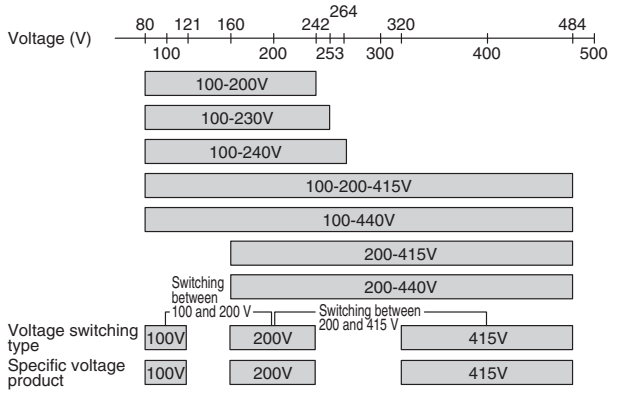


**Table 4-27**

| Circuit type | Single-phase 2-wire 100- or 200-V circuit | Single-phase 3-wire 100- and 200-V circuit |
|---|---|---|
| Example of connection | 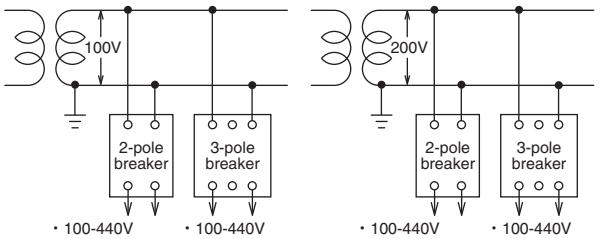  • 100-440V • 100-200-415V • 100-200V • 100-240V<br>• 100-440V • 100-200-415V • 100-200V • 100-230V • 100V<br>• 100-440V • 100-200-415V • 100-200V • 100-240V<br>• 100-440V • 100-200-415V • 100-200V • 100-230V • 200-415V • 200-440V | 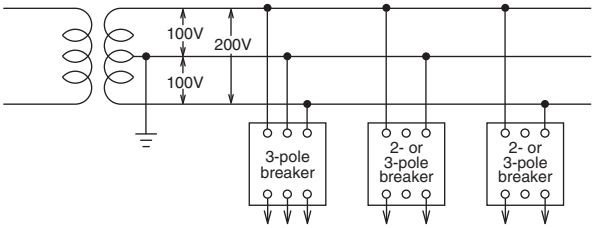  • 100-200-415V • 100-200V • 200-415V • 100-230V • 100-440V • 200-440V<br>• 100-200-415V • 100-200V • 100V • 100-240V • 100-230V • 100-440V<br>• 100-200-415V • 100-200V • 200-415V • 100-240V • 100-230V • 100-440V • 200-440V |
| Circuit type | 3-phase 3-wire 200-V circuit | 3-phase 3-wire 415-V circuit |
| Example of connection | 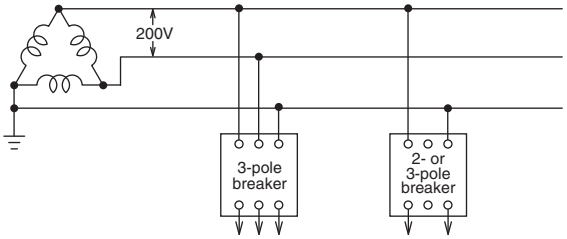  • 100-200-415V • 100-200V • 200-415V • 100-440V • 100-230V • 200-440V<br>• 100-200-415V • 100-200V • 200-415V • 100-240V • 100-440V • 200-440V | 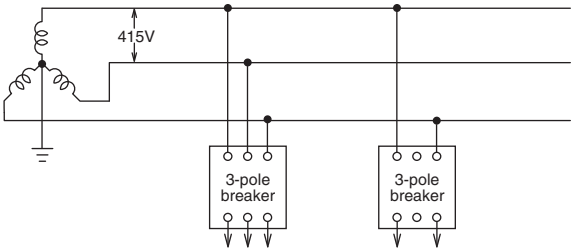  • 100-200-415V • 200-415V • 415V • 100-440V • 200-440V<br>• 100-200-415V • 200-415V • 415V • 100-440V • 200-440V |
| Circuit type | 3-phase 4-wire 415-V circuit | |
| Example of connection | 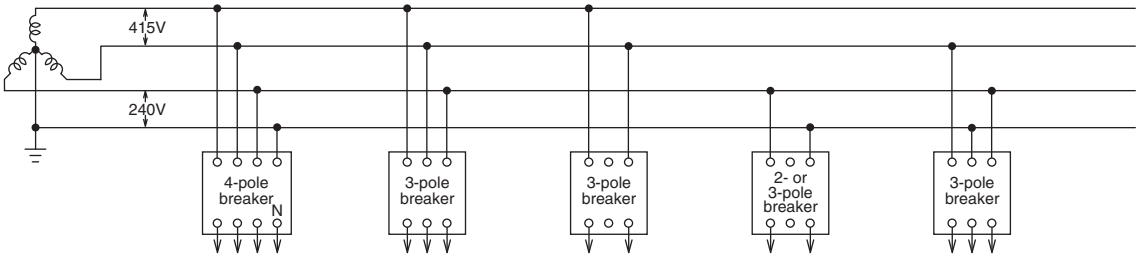  • 100-200-415V • 200-415V • 100-440V • 200-440V<br>• 100-200-415V • 200-415V • 415V • 100-440V • 200-440V<br>• 100-200-415V • 200-415V • 415V • 100-440V • 200-440V<br>• 100-200-415V • 200-415V • 100-240V • 100-440V • 200-440V<br>• 100-200-415V • 200-415V • 100-440V • 200-440V | |

**<Cautions when selecting and connecting>**

**(1) When a 3-pole circuit breaker is used as a 2-pole one, use the right and left poles.**

**(2) For the mains of a 3-phase 4-wire 415-V circuit, use a 4-pole circuit breaker having a rated voltage of 415 V or 440 V, and connect the neutral pole to the N pole on the right side.**

# 4. Earth Fault Protection Coordination and Combination of Devices

**Table 4-28**

| Protection type | Details | Installation point | Combination |
|---|---|---|---|
| With selectivity only for earth fault breaking | ●On general lines, the protection grounding resistance is relatively large and the earth fault current is small. In this case, install a time-delay relay on the main circuit and a high-speed relay on a branch circuit. | Main circuit | • Time-delay ELCB<br>• Combination of MCCB and time-delay earth leakage relay |
| | | Branch circuit | High-speed ELCB |
| With selectivity for earth fault breaking and cascade type of short-circuit breaking | ●The selectivity for earth fault breaking is as stated above.<br>●Significant short-circuit fault very rarely occurs because of its nature (in most cases, circuits are broken at the early stage of earth fault). This protection is applied when the continuity of power supply is expendable.<br>(Refer to the combination for cascade breaking on page 83.) | Main circuit | • Class S time-delay ELCB<br>• Combination of MCCB (class U) and time-delay earth leakage relay |
| | | Branch circuit | • Class C time-delay ELCB<br>• Combination of MCCB (class C) and high-speed earth leakage relay |
| With selectivity for earth fault breaking and short-circuit breaking | ●This protection is applied when selectivity is necessary in the entire area of fault.<br>(Refer to the combination for selective breaking on page 81.) | Main circuit | Combination of electronic MCCB and time-delay earth leakage relay |
| | | Branch circuit | • High-speed ELCB<br>• Combination of MCCB and high-sspeed earth leakage relay |

Remark: 1. “Time-delay or high-speed earth leakage relay” refers to NV-ZBA, NV-ZSA, NV-ZHA or NV-ZLA.

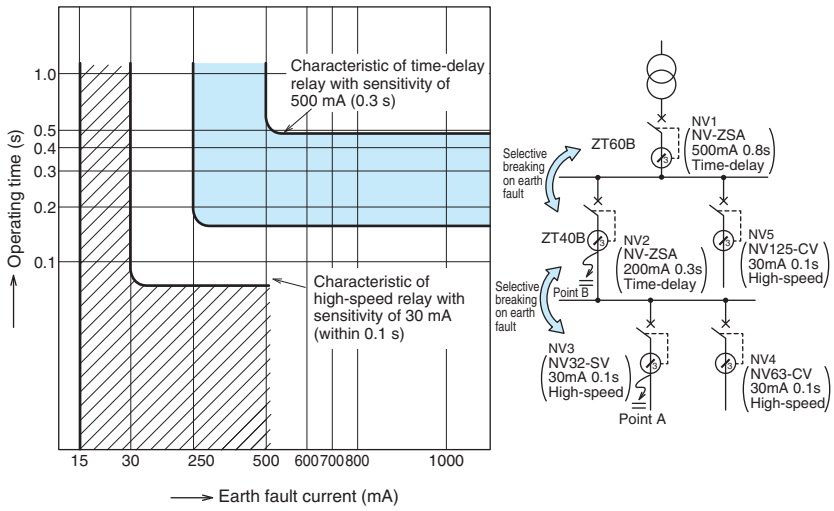


**Fig. 4.18 Example of coordination of time-delay and high-speed relays for earth fault breaking**

# MEMO

# 5

# Installation and Connection

1) Connection Types ..... 94
2) Connecting Parts ..... 96
3) Standard Tightening Torque ..... 97
4) Crimp Terminal Type ..... 98
5) Busbar ..... 100
6) Insulation Distance on Power Source Side ..... 101
7) Effect of Installation Orientation ..... 102
8) Connection of Line and Load ..... 102

# 1. Connection Types

**Table 5-1 Connection**

| Connection type (Code address) | | | Front connection (F) | | | Rear (B) | |
|---|---|---|---|---|---|---|---|
| | | | Screw terminal (AMP-N) | Busbar terminal (BAR) | Solderless (BOX) terminal (SL) | Bar stud (B-ST) | Round stud (B-ST) |
| Image | | | Please refer to page 98. 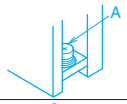 | 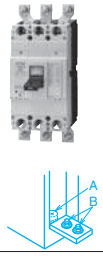 | 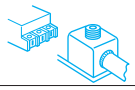 | 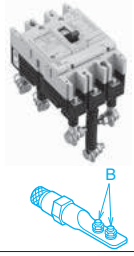 | |
| MCCB | C•S•H•MB | NF30-CS | ● | – | – | – | ● |
| | | NF32-SV • NF63-CV • NF63-SV • NF63-HV | ● | ● | – | – | ● |
| | | NF125-CV • NF125-SEV • NF125-SV • NF125-SGV • NF125-LGV • NF125-HEV • NF125-HV • NF125-HGV | ● | ● | – | ● | – |
| | | NF160-SGV • NF160-LGV • NF160-HGV • NF250-CV • NF250-SV • NF250-HV • NF250-SEV • NF250-HEV • NF250-SGV • NF250-LGV • NF250-HGV | ● | ● | – | ● | – |
| | | NF400-SW • NF400-SEW • NF400-HEW • NF400-REW • NF400-CW | – | ● | – | ● | – |
| | | NF630-SW • NF630-SEW • NF630-HEW • NF630-REW • NF630-CW | – | ● | – | ● | – |
| | | NF800-SEW • NF800-HEW • NF800-REW • NF800-SDW • NF800-CEW | | | | | |
| | | NF1000-SEW • NF1250-SEW • NF1600-SEW | | | | ● | |
| | R•U | NF125-UV | ● | ● | – | ● | – |
| | | NF125-RGV • NF250-RGV • NF250-UV | ● | ● | – | ● | – |
| | | NF400-UEW | – | ● | – | ● | – |
| | | NF800-UEW | | | | | |
| | UL | NF50-SVFU | ● | ● | – | – | – |
| | | NF100-CVFU | ● | ● | ● | – | – |
| | | NF125-SVU<br>NF125-HVU | ● | ● | ● | – | – |
| | | NF250-SVU<br>NF250-HVU | ● | ● | ● | – | – |
| | | NF225-CWU | ● | ● | – | – | – |
| | | NF-SKW • NF-SLW | – | ● | ● | – | – |
| BH | | BH-K • BH-C1 • BH-C2 • BV-C1 • BV-C2 | ● | – | – | – | – |
| | | BH-P | ●(Only load side) | – | – | – | – |
| ELCB | C•S•H | NV32-SV • NV63-CV • NV63-SV • NV63-HV | ● | ● | – | – | ● |
| | | NV125-CV • NV125-SV • NV125-HV • NV125-SEV • NV125-HEV | ● | ● | – | ● | – |
| | | NV250-CV/SV/HV • NV250-SEV/HEV | ● | ● | – | ● | – |
| | | NV400-SW • NV400-SEW • NV400-HEW • NV400-REW • NV400-CW | – | ● | – | ● | – |
| | | NV630-SW • NV630-SEW • NV630-HEW • NV630-CW | | | – | ● | |
| | | NV800-SEW • NV800-HEW | | | | | |

**Remarks**

| | | | | | | | |
|---|---|---|---|---|---|---|---|
| Shape | Kind of terminal screw (A)<br>(Circuit breakers having frame size of 1000A and more are not provided with terminal screws (A).) | | | | | | |
| | 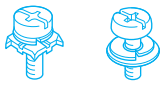 Pan-head screw with clamp | | | Pan-head screw | Bolt (Hex-socket) | | Bolt |
| Screw size | M5 | | | M8 | M8 | 2×M8 | M10 |
| Type | NF32-SV<br>63-CV<br>63-SV<br>63-HV<br>50-SVFU(*3) | BH-K<br>BH-P | NV32-SV<br>63-CV<br>63-SV<br>63-HV | NF<br>63-CV(60, 63A)<br>63-SV(60, 63A)<br>63-HV(60, 63A)<br>125-CV<br>125-SV<br>125-HV<br>125-SEV<br>125-HEV<br>100-CVFU<br>125-SVU<br>125-HVU<br>125-UV | NV<br>63-CV(60, 63A)<br>63-SV(60, 63A)<br>63-HV(60, 63A)<br>125-CV<br>125-SV<br>125-HV<br>125-SEV<br>125-HEV | NF<br>125-SEV<br>125-HEV<br>125-RGV<br>125-SGV<br>125-LGV<br>125-HGV<br>160-SGV<br>160-LGV<br>160-HGV<br>250-CV<br>250-SV<br>250-HV<br>250-SEV<br>250-HEV<br>250-SGV<br>250-LGV<br>250-HGV<br>250-RGV<br>250-UV<br>225-CWU<br>250-SVU<br>250-HVU<br>NV<br>125-SEV<br>125-HEV<br>250-CV<br>250-SV<br>250-HV<br>250-SEV<br>250-HEV | NF<br>400-UEW<br>(4P)<br>800-CEW<br>800-SEW<br>800-HEW<br>800-REW<br>800-UEW<br>800-SDW | NV<br>800-SEW<br>800-HEW | NF<br>400-CW<br>400-SW<br>400-SEW<br>400-HEW<br>400-REW<br>400-UEW(3P)<br>630-CW<br>630-SW<br>630-SEW<br>630-HEW<br>630-REW<br>NV<br>400-CW<br>400-SW<br>400-SEW<br>400-HEW<br>400-REW<br>630-CW<br>630-SW<br>630-SEW<br>630-HEW |

In case of clamp connection (*3)

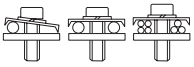

①When the wire size is 5.5 mm² or more, divide the wires, and connect them.
②When connecting wires differing in size, for example, $\phi$1.6 wires and 5.5-mm² wires, connect the two kinds of wires together to a crimp terminal because the thinner wires easily come off.
③Do not tighten directly solid wires and cords consisting of thin copper wires used as strands, for example $\phi$1.6 and 1.25-mm² wires, together.

●With insulating base (tube) for installation of metallic board
●The bar stud installation position can be turned 90° on all models (except NF800-UEW, NF1200-UR and breakers having frame size of 2500A and more). The current-carrying capacity of a vertically installed bus bar is larger than that of a horizontally installed bus bar even if the bus bars have the same dimensions.

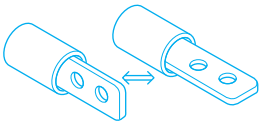

Notes *1 For 50A or less, a pan-head screw M5 with clamp is provided.
*2 A pan-head screw M5 is provided on the power supply side of BH-C1 and C2 and BV-C1 and C2.
*3 It is impossible to directly connect the wires of 40- and 50-A, NF/NV 50-SVFU.

| | Plug-in (PM) | | Plug-in type for distribution board |
|---|---|---|---|
| | Bar stud (PM) | Screw terminal (PM) | For distribution board for electric lamps (BPA) |
| | | 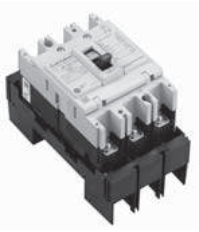 | 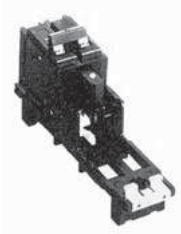 |
| | – | – | – |
| | – | ● | – |
| | – | ● | – |
| | ● | – | – |
| | ● | – | – |
| | ● (Except for NF1600-SEW) | – | – |
| | – | ●(Except for 4P) | – |
| | ●(Except for 4P) | – | – |
| | ● (Except for NF800-UEW) | – | – |
| | – | – | – |
| | – | – | – |
| | – | – | – |
| | – | – | – |
| | – | – | – |
| | – | – | – |
| | – | – | ● |
| | – | ● | – |
| | – | ● | – |
| | ● | – | – |
| | ● | – | – |
| | The circuit breaker can be connected only by pushing it onto the preliminarily wired terminal block. Install it tightening the supplied screws through the mounting holes. | | Mounting base for distribution board for electric lamps.<br>For the external dimensions, refer to page 139. |

**Table 5-2 List of terminal screws (B)**

| Model | | Connection type | Front | Rear | Plug-in |
|---|---|---|---|---|---|
| MCCB | C • S • H | NF400-CW • NF400-SW • NF400-SEW • NF400-HEW • NF400-REW • NF630-CW • NF630-SW • NF630-SEW<br>NF630-HEW • NF630-REW • NF800-CEW • NF800-SEW • NF800-HEW • NF800-REW • NF800-SDW • NF-SKW • NF-SLW | M12 bolt | | |
| | | NF1000-SEW • NF1250-SEW | M12 bolt | | |
| | | NF1600-SEW | M10 bolt | | — |
| | U | NF400-UEW | M12 bolt | | |
| | | NF800-UEW | M12 bolt | | — |
| ELCB | T-(AC) | NV400-SW • NV400-SEW • NV400-HEW • NV400-REW • NV400-CW • NV630-SW • NV630-SEW • NV630-HEW • NV630-CW • NV-SKW | M12 bolt | | |
| | | NV800-SEW • NV800-HEW | M12 bolt | | |

## 2. Connecting Parts

For the connection shown in the table on the previous page, the following parts are available as connecting parts.

**Table 5-3 Studs on rear surface (B-ST)**

| Type name | Number of poles | Applicable models | | Set of order | Stud shape and major included parts | Remarks |
|---|---|---|---|---|---|---|
| | | MCCB | ELCB | | | |
| ST-05SV2 | 2 | NF32-SV, NF63-CV, NF63-SV<br>NF63-HV | NV32-SV, NV63-CV<br>NV63-SV, NV63-HV | sets | ★Round studs<br>●Round studs (with insulating tube)<br>(2-pole: 4 pcs, 3-pole: 6 pcs, 4-pole: 8 pcs)<br>●Bolts and nuts | One set includes the parts for one unit. Please place an order for the number of circuit breakers. |
| ST-05SV3 | 3 | | | | | |
| ST-05SV4 | 4 | NF63-SV, NF63-HV | — | | | |
| ST-1SV2 | 2 | NF125-CV, NF125-SV<br>NF125-HV(3, 4P) | — | sets | ★Bar studs<br>●Bar studs (with insulating tube)<br>(2-pole: 4 pcs, 3-pole: 6 pcs, 4-pole: 8 pcs)<br>●Bolts and nuts | |
| ST-1SV3 | 3 | | NV125-CV, NV125-SV<br>NV125-HV | | | |
| ST-1SV4 | 4 | | | | | |
| ST-1HV2 | 2 | NF125-HV(2P) | — | | | |
| ST-2SV2 | 2 | NF125-SEV, NF125-HEV, NF125-RGV | — | sets | ★Bar studs<br>●Bar studs (with insulating tube)<br>(2-pole: 4 pcs, 3-pole: 6 pcs, 4-pole: 8 pcs)<br>●Bolts and nuts | |
| ST-2SV3 | 3 | NF125-SGV, NF125-LGV, NF125-HGV<br>NF160-SGV, NF160-LGV, NF160-HGV<br>NF250-SGV, NF250-LGV, NF250-HGV<br>NF250-CV, NF250-SV<br>NF250-LGV/HGV, NF250-HV<br>NF250-SEV, NF250-RGV<br>NF250-HEV, NF125-SGV/HGV<br>NF125-LGV, NF160-SGV<br>NF160-LGV/HGV | NV125-SEV, NV125HEV<br>NV250-CV, NV250-SV<br>NV250-HV, NV250-SEV<br>NV250-HEV | | | |
| ST-2SV4 | 4 | | | | | |
| ST-4SW2 | 2 | NF400-CW, NF400-SW<br>NF400-SEW, NF400-HEW<br>NF400-REW | — | | ★Bar studs<br>●Insulating bases<br>(2-pole: 4 pcs, 3-pole: 6 pcs, 4-pole: 8 pcs)<br>●Bar studs<br>(2-pole: 4 pcs, 3-pole: 6 pcs, 4-pole: 8 pcs)<br>●Mounting screws, bolts and nuts | |
| ST-4SW3 | 3 | | NV400-CW, NV400-SW<br>NV400-SEW<br>NV400-HEW<br>NV400-REW | | | |
| ST-4SW4 | 4 | | | sets | | |
| ST-6SW2 | 2 | NF630-CW, NF630-SW<br>NF630-SEW, NF630-HEW<br>NF630-REW | — | | | |
| ST-6SW3 | 3 | | NV630-CW, NV630-SW<br>NV630-SEW, NV630-HEW | | | |
| ST-6SW4 | 4 | | | | | |
| ST-8SW2 | 2 | NF800-SDW, NF800-CEW<br>NF800-SEW, NF800-HEW<br>NF800-REW | — | sets | ★Bar studs<br>●Insulating base (2 pcs)<br>●Bar studs<br>(2-pole: 4 pcs, 3-pole: 6 pcs, 4-pole: 8 pcs)<br>●Mounting screws, bolts and nuts | |
| ST-8SW3 | 3 | | NV800-SEW, NV800-HEW | | | |
| ST-8SW4 | 4 | | | | | |

**Table 5-4 Plug-in type terminal blocks (PM)**

| Type name | Number of poles | Applicable models | Set of order | Major included parts |
|---|---|---|---|---|
| PM-05SV2 | 2 | NF32-SV, NF63-CV, NF63-SV, NF63-HV<br>NV32-SV, NV63-CV (3P) , NV63-SV (3P) , NV63-HV<br>NF63-SV, NF63-HV | sets | Plug-in type terminal block (1 pc) |
| PM-05SV3 | 3 | | | |
| PM-05SV4 | 4 | | | |
| PM-NV05SV2 | 2 | NV63-CV, NV63-SV | sets | Plug-in type terminal block (1 pc) (2-pole: 4 pcs) |
| PM-1SV2 | 2 | NF125-CV, NF125-SV | sets | Plug-in type terminal block (1 pc)<br>Tulip terminals<br>(2-pole: 4 pcs, 3-pole: 6 pcs, 4-pole: 8 pcs) |
| PM-1SV3 | 3 | NF125-CV, NF125-SV, NF125-HV, NV125-CV, NV125-SV<br>NV125-HV | | |
| PM-1SV4 | 4 | NF125-SV, NF125-HV, NV125-SV, NV125-HV | | |
| PM-1HV2 | 2 | NF125-HV | | |
| PM-2SV2 | 2 | NF125-SEV, NF125-HEV, NF250-CV, NF250-SV, NF250-HV<br>NF250-SEV, NF250-HEV, NF125-SGV, NF125-LGV<br>NF125-HGV, NF160-SGV, NF160-LGV, NF160-HGV<br>NF250-SGV, NF250-LGV, NF250-HGV, NV125-SEV<br>NV125-HEV, NV250-CV, NV250-SV, NV250-HV, NV250-SEV<br>NV250-HEV, NF250-LGV/HGV, NF250-RGV, NF125-SGV/HGV<br>NF125-LGV, NF160-SGV, NF160-LGV/HGV | sets | Plug-in type terminal block (1 pc)<br>Plug-in type barriers<br>(2-pole: 2 pcs, 3-pole: 4 pcs, 4-pole: 6 pcs)<br>Tulip terminals<br>(2-pole: 4 pcs, 3-pole: 6 pcs, 4-pole: 8 pcs) |
| PM-2SV3 | 3 | | | |
| PM-2SV4 | 4 | | | |
| PM-4SW3 | 3 | NF400-CW, NF400-SW, NF400-SEW, NF400-HEW, NF400-REW<br>NV400-CW, NV400-SW, NV400-SEW, NV400-HEW, NV400-REW | sets | Plug-in type terminal block (2 pcs)<br>Plug-in type barriers (4 pcs)<br>Tulip terminals (3-pole: 6 pcs) |
| PM-6SW3 | 3 | NF630-CW, NF630-SW, NF630-SEW, NF630-HEW, NF630-REW<br>NV630-CW, NV630-SW, NV630-SEW, NV630-HEW | | |
| PM-8SW3 | 3 | NF800-CEW, NF800-SEW, NF800-HEW, NF800-REW<br>NV800-SEW, NV800-HEW | sets | Plug-in type terminal block (2 pcs)<br>Tulip terminals (3-pole: 6 pcs) |
| PM-10SW3 | 3 | NF1000-SEW, NF1250-SEW | sets | Plug-in type terminal block (2 pcs)<br>Plug-in type barriers (4 pcs)<br>Tulip terminals (3-pole: 6 pcs) |

Note *1 In addition to the circuit breakers shown above, 4-pole and 2-pole circuit breakers are available. We are ready to manufacture such circuit breakers to order. Please consult us.

# 3. Standard Tightening Torque

Rear
<Round stud>

Fig. 1

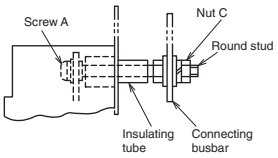


<Bar stud>

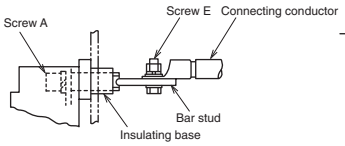


Fig. 2

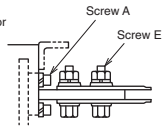


Fig. 3

Plug-in
<Screw terminal>

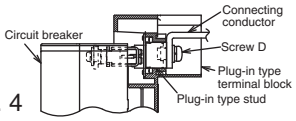


Fig. 4

<Bar stud>

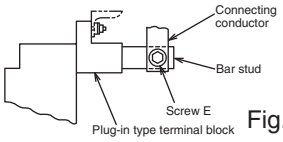


Fig. 5

**Table 5-5 Standard tightening torque (*1)**

**Tightening torque N·m**

| Model / Connection type | | Rear | | | | | | | | Plug-in | | | |
|---|---|---|---|---|---|---|---|---|---|---|---|---|---|
| | | Round stud | | | | Bar stud | | | | Screw terminal | | Bar stud | |
| | | Fig.1 | | | | Fig. 2, Fig.3 | | | | Fig.4 | | Fig.5 | |
| MCCB | ELCB | Screw A | | Nut C | | Screw A | | Screw E | | Screw D | | Screw E | |
| | | Size | Tightening torque | Size | Tightening torque | Size | Tightening torque | Size | Tightening torque | Size | Tightening torque | Size | Tightening torque |
| NF30-CS | – | M4×0.7 | 1 | M6 | 2 | – | – | – | – | – | – | – | – |
| NF32-SV, NF63-CV<br>NF63-SV, NF63-HV | NV32-SV, NV63-CV<br>NV63-SV, NV63-HV | M4×0.7 | 1 | M6 | 2 | – | – | – | – | M6 | 3 | – | – |
| NF125-CV, NF125-SV<br>NF125-HV, NF125-UV | NV125-CV, NV125-SV<br>NV125-HV | – | – | – | – | M6 | 4 | M8 | 12 | M8 | 6 | – | – |
| NF125-SEV, NF125-HEV, NF125-RGV<br>NF250-CV, NF250-SV, NF250-HV, NF250-SEV<br>NF250-HEV, NF250-RGV, NF250-UV<br>NF250-LGV/HGV, NF250-RGV, NF125-SGV/HGV<br>NF125-LGV, NF160-SGV, NF160-LGV/HGV<br>NF125-SGV, NF125-LGV, NF125-HGV<br>NF160-SGV, NF160-LGV, NF160-HGV<br>NF250-SGV, NF250-LGV, NF250-HGV | NV125-SEV, NV125-HEV<br>NV250-CV, NV250-SV<br>NV250-HV, NV250-SEV<br>NV250-HEV | – | – | – | – | M6 | 10 | M8 | 12 | – | – | M8 | 12 |
| NF400-CW, NF400-SW, NF400-SEW<br>NF400-HEW, NF400-REW<br>NF400-UEW (3P) | NV400-CW, NV400-SW<br>NV400-SEW, NV400-HEW<br>NV400-REW | – | – | – | – | M8 | 20 | M12 | 45 | – | – | M12 | 45 |
| NF400-UEW (4P) | – | – | – | – | – | M10 | 30 | M12 | 45 | – | – | M12 | 45 |
| NF630-CW, NF630-SW, NF630-SEW<br>NF630-HEW, NF630-REW | NV630-CW, NV630-SW<br>NV630-SEW<br>NV630-HEW | – | – | – | – | M8 | 20 | M12 | 45 | – | – | M12 | 45 |
| NF800-CEW, NF800-SDW<br>NF800-SEW, NF800-HEW, NF800-REW | NV800-SEW<br>NV800-HEW | – | – | – | – | M10 | 30 | 2-M12 | 45 | – | – | 2-M12 | 45 |
| NF800-UEW (*2) | | | | | | | | | | | | | |
| NF1000-SEW<br>NF1250-SEW | – | – | – | – | – | 4-M8 | 12 | 2-M12 | 45 | – | – | 2-M12 | 45 |
| NF1600-SEW | – | – | – | – | – | 4-M8 | 12 | 4-M10 | 25 | – | – | – | – |

Notes *1 The appropriate range of tightening torque is ±20% of each value (standard tightening torque) shown in the above table. Please refer to the supplied assembly manual and instruction manual for more information.
*2 The plug-in type is not available.

# 4. Crimp Terminal Type

As the terminals in ▭, commercially available crimp terminals can be used. Please purchase the terminals at an electric material store.
For others, the crimp terminals for Mitsubishi MCCB must be used. Place an order with us.
For the connection types shown in Fig. a and Fig. b, only crimp terminals will be delivered.

**Table 5-6 List of applicable crimp terminals**

| Frame (A) | Nominal sectional area mm² | | 2 | 5.5 | 8 | 14 | 22 |
|---|---|---|---|---|---|---|---|
| | Allowable current (600 V, IV wire at 30°C, not in conduit) (*4) | | 27A | 49A | 61A | 88A | 115A |
| | Model | Size of mm² | 1.04 to 2.63 | 2.63 to 6.64 | 6.64 to 10.52 | 10.52 to 16.78 | 16.78 to 26.66 |
| | MCCB | ELCB | | | | | |
| 30<br>50<br>100 | BH-K, BH-P | – | R-2-5 | R-5.5-5 | R-8-5 | R-14-5 | BH-22<br>(L330T459-23) |
| | BH-K100, BH-P100 | – | | | R-8-8 | R-14-8 | R-22-8 |
| 30<br>32<br>50<br>60<br>63 | NF30-CS, NF32-SV, NF63-CV*, NF63-SV*<br>NF63-HV*<br>*50A or below | NV32-SV, NV63-CV*, NV63-SV*<br>NV63-HV*<br>*50A or below | R-2-5<br>*(R-2-6) | R-5.5-5<br>*(R-5.5-6) | R-8-5 | R-14-5 | JST22-S5<br>BH-22<br>(L330T459-23) |
| | NF63-CV, NF63-SV, NF63-HV<br>60, 63A | NV63-CV, NV63-SV, NV63-HV<br>60, 63A | R-2-8 | R-5.5-8 | R-8-8 | R-14-8 | R-22-8 |
| 125 | – | – | R-2-5<br>(R-2-6) | R-5.5-5<br>(R-5.5-6) | R-8-5 | R-14-5 | JST22-S5<br>(L330T459-23) |
| | NF125-CV, NF125-SV, NF125-HV, NF125-UV<br>60A or more | NV125-CV, NV125-SV, NV125-HV<br>60A or more | R-2-8 | R-5.5-8 | R-8-8 | R-14-8 | R-22-8 |
| 125<br>225<br>250 | NF125-SEV, NF125-HEV, NF125-RGV<br>NF250-CV, NF250-SV, NF250-HV, NF250-UV<br>NF250-SEV, NF250-HEV, NF250-RGV<br>NF125-SGV, NF160-SGV, NF250-SGV<br>NF125-LGV, NF160-LGV, NF250-LGV<br>NF125-HGV, NF160-HGV, NF250-HGV | NV125-SEV, NV125-HEV<br>NV250-CV, NV250-SV, NV250-HV<br>NV250-SEV, NV250-HEV | | | | R-14-8 | R-22-8 |
| 400<br>600<br>630 | NF400-CW, NF400-SW, NF400-SEW<br>NF400-HEW, NF400-REW, NF400-UEW<br>NF630-CW, NF630-SW, NF630-SEW<br>NF630-HEW, NF630-REW | NV400-CW, NV400-SW<br>NV400-SEW, NV400-HEW<br>NV400-REW, NV630-CW<br>NV630-SW, NV630-SEW<br>NV630-HEW | | | | | |
| 800<br>1000<br>1200<br>1250 | NF800-CEW, NF800-SEW, NF800-HEW<br>NF800-REW, NF800-UEW, NF800-SDW<br>NF1000-SEW, NF1250-SEW | NV800-SEW, NV800-HEW | | | | | |

● **Reference drawings of connection types**

**Method of connecting directly to terminal(s) of body**

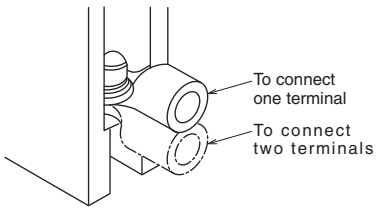


(Fig. a)

**Method of connecting to front bar terminal**

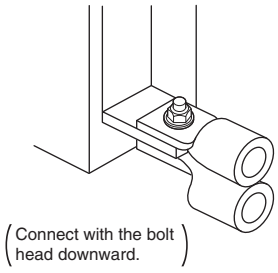


(Fig. b)

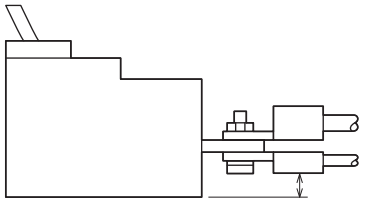

Carefully check the insulating distance between the connecting bus bar, crimp terminal and tightening bolt and the ground and the phase-to-phase insulating distance.

<Explanation of abbreviations>
R ····· Product specified by JIS
CB ····· Product specified by JEM 1399
AMP ····· Product made by Nippon AMP
JST ····· Product made by J.S.T. Mfg. Co., Ltd.
NTK ····· Product made by Nippon Tanshi Co., Ltd.
NTM ····· Product made by Nichifu Co., Ltd.
DST ····· Product made by Daido Solderless Terminal Mfg. Co., Ltd.

| 38 | 60 | 100 | 150 | 200 | 325 | Crimp terminal tightening screw | | | Remarks | Reference drawing of connection type |
|---|---|---|---|---|---|---|---|---|---|---|
| 162A | 217A | 298A | 395A | 469A | 650A | Screw size | Tightening torque N • m | Shape | | |
| 26.66 to 42.42 | 42.42 to 60.57 | 96.3 to 117.2 | 117.2 to 152.05 | 192.6 to 242.27 | 242.27 to 325 | | | | | |
| | | | | | | M5 | 2 to 3 | 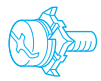 M5 • M6 | When connecting two crimp terminals, set the terminals as shown below if the *-marked terminals are used. 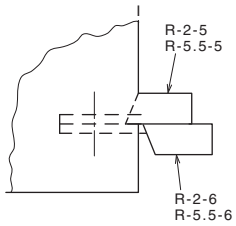  | (Fig. a) |
| AMP #322870<br>JST 38-S8<br>NTK R38-8S | 1AF-60<br>(L330T459-12)<br>CB60-S8 | | | | | M8 | 5 to 7 | | | |
| | | | | | | M5 | 2 to 3 | 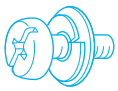 M8 | | |
| AMP #322870<br>JST 38-S8<br>NTK R38-8S | 1AF-60<br>(L330T459-12)<br>CB60-S8 | | | | | M8 | 5 to 7 | | | |
| | | | | | | M5 | 2 to 3 | 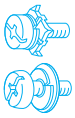 M5 M8 | | |
| AMP #322870<br>JST 38-S8<br>NTK R38-8S | 1AF-60<br>(L330T459-12)<br>CB60-S8 | | | | | M8 | 5 to 7 | | | |
| R-38-8 | R-60-8 | 2AF<br>(LN300T920-20)<br>CB100-S8 | 2CR-150(*1)<br>(LN300T920-21)<br>(*1)CB150-S8 | | | M8 | 8 to 13 | | When using 2AF, use a crimp tool having a nominal size of 100. | |
| R-38-12 | R-60-12 | R-100-12 | R-150-12 | R-200-12 | JST325-12 | M12 | 40 to 50 | 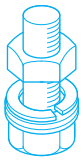 | Fit to a front type bar terminal. Up to two pieces can be fitted to one terminal. | (Fig. b) |
| R-38-12 | R-60-12 | R-100-12 | R-150-12<br>RD150-12<br>SD150-12 | R-200-12<br>RD200-12<br>SD200-12 | JST325-12<br>RD325-12<br>SD325-12 | | | | | |

Notes *1 When using 2CR-150 or CB150-S8, insulate it from TC-S with insulating tube or tape. For a 2- or 3-pole circuit breaker, TCL-2SV3L is applicable.
*2 On the power supply side, pan-head screws M5 are used.
*3 When tightening a terminal screw without connecting a wire, crimp terminal or bar, tighten the screw to 20 to 30% of the torque shown in the above table (to prevent damage to the threads).
*4 The table shows not the allowable current values of circuit breakers, but those of wires applicable to crimp terminals.
Remark: 1. For the crimp terminals for UL listed circuit breakers, refer to the page of the characteristics and external dimensions of UL 489 Listed Circuit Breakers.

## ● Dimensions of crimp terminals <extracted from catalog of JST>

| Part number | Shape | Applicable screw size | External dimensions | | | | | | Applicable wire mm² |
|---|---|---|---|---|---|---|---|---|---|
| | | | ϕd2 | B | L | F | E | Thickness | |
| R2-5 | A | M5 | 5.3 | 9.5 | 16.8 | 7.3 | 4.8 | 0.8 | 1.04 to 2.63 |
| R2-6 | | M6 | 6.4 | 12.0 | 21.8 | 11.0 | | | |
| R2-8 | | M8 | 8.4 | | | | | | |
| R5.5-5 | A | M5 | 5.3 | 9.5 | 19.8 | 8.3 | 6.8 | 1.0 | 2.63 to 6.64 |
| R5.5-6 | | M6 | 6.4 | 12.0 | 25.8 | 13.0 | | | |
| R5.5-8 | | M8 | 8.4 | 15.0 | 28.0 | 13.7 | | | |
| R8-5 | A | M5 | 5.3 | 12.0 | 23.8 | 9.3 | 8.5 | 1.2 | 6.64 to 10.52 |
| 8-5NS | | M5 | 5.3 | 9.0 | 22.3 | | | | |
| R8-6 | | M6 | 6.4 | 12.0 | 23.8 | | | | |
| R8-8 | | M8 | 8.4 | 15.0 | 29.8 | 13.8 | | | |
| 8-5SC-9 | | M5 | 5.3 | 9 | 23.8 | 9.3 | 8.5 | 1.2 | 6.64 to 10.52 |
| R14-5 | A | M5 | 5.3 | 12.0 | 29.8 | 13.3 | 10.5 | 1.5 | 10.52 to 16.78 |
| 14-5NS | | M5 | 5.3 | 9.0 | 28.3 | | | | |
| R14-6 | | M6 | 6.4 | 12.0 | 29.8 | | | | |
| R14-8 | | M8 | 8.4 | 16.0 | 32.8 | 14.5 | | | |
| L330T459-23 | A | M5 | 5.3 | 12.0 | 30.0 | 12.0 | 12.0 | 1.8 | 16.78 to 26.66 |
| 22-5NS | | M5 | 5.3 | 9.5 | 28.7 | | | | |
| 22-S6 | | M6 | 6.4 | 12.0 | 30.0 | | | | |
| R22-8 | | M8 | 8.4 | 16.5 | 33.7 | 13.5 | | | |
| R22-12 | | M12 | 13.0 | 22.0 | 42.5 | 19.5 | | | |
| 38-S8 | A | M8 | 8.4 | 15.5 | 38.0 | 16.0 | 14.0 | 1.8 | 26.66 to 42.42 |
| R38-8 | | M8 | 8.4 | 22.0 | 42.7 | 17.7 | | | |
| R38-12 | | M12 | 13.0 | | | | | | |
| L330T459-12 | A | M8 | 8.4 | 16.0 | 46.7 | 20.7 | 18.0 | 2.0 | 42.42 to 60.57 |
| R60-8 | | M8 | 8.4 | 22.0 | 49.7 | 20.7 | | | |
| R60-12 | | M12 | 13.0 | | | | | | |
| LN300T920-20 | B | M8 | 8.4 | 22.5 | 51.0 | 20.0 | 21.0 | 2.6 | 96.3 to 117.2 |
| R100-12 | A | M12 | 13.0 | 28.5 | 55.6 | 20.4 | | | |

| Part number | Shape | Applicable screw size | External dimensions | | | | | | Applicable wire mm² |
|---|---|---|---|---|---|---|---|---|---|
| | | | ϕd2 | B | L | F | E | Thickness | |
| LN300T920-21 | B | M8 | 8.4 | 22.5 | 70.0 | 33.0 | 27.0 | 3.2 | 117.2 to 152.05 |
| L330T402-8 | | M8 | 8.4 | 25.3 | 61.5 | 23.0 | | | |
| R150-12 | A | M12 | 13.0 | 36.0 | 66.0 | 21.0 | | | |
| R200-12 | A | M12 | 13.0 | 44.0 | 78.0 | 24.5 | 31.5 | 4.0 | 192.6 to 242.27 |
| 325-12 | A | M12 | 13.0 | 50.5 | 88.0 | 33.5 | 35.5 | 4.5 | 242.27 to 325 |
| CB60-S8 | B | M8 | 8.4 | 16.0 | 46.7 | 20.7 | 18.0 | 2.0 | 42.42 to 60.57 |
| CB100-S8 | | | 8.4 | 22.0 | 52.5 | 20.5 | 21.0 | 2.6 | 96.3 to 117.2 |
| CB150-S8 | | | 8.4 | 22.0 | 61.0 | 23.0 | 27.0 | 3.2 | 117.2 to 152.05 |

| Part number | Shape | Applicable screw size | External dimensions | | | | | | | Applicable wire mm² |
|---|---|---|---|---|---|---|---|---|---|---|
| | | | ϕd2 | B | L | F | E | N | Thickness | |
| RD60-12 | C | M12 | 14.0 | 22.0 | 89.0 | 20.0 | 18.0 | 40 | 2.0 | 42.42 to 60.57 |
| RD100-12 | | | 14.0 | 28.5 | 95.5 | 20.3 | 21.0 | | 2.6 | 96.3 to 117.2 |
| RD150-12 | | | 14.0 | 36.0 | 106.0 | 21.0 | 27.0 | | 3.2 | 117.2 to 152.05 |
| RD200-12 | | | 14.0 | 44.0 | 116.5 | 23.0 | 31.5 | | 4.0 | 192.6 to 242.27 |
| RD325-12 | | | 14.0 | 50.5 | 123.8 | 23.0 | 35.5 | | 4.5 | 242.27 to 325 |
| SD150-12 | C | M12 | 14.0 | 36.0 | 107.0 | 29.0 | 28.0 | 32 | 3.2 | 117.2 to 152 |
| SD200-12 | | | | 44.0 | 108.0 | 36.0 | 32.0 | | 4.0 | 192.6 to 242.2 |
| SD325-12 | | | | 50.5 | 125.0 | 38.0 | 37.0 | | 4.5 | 242.2 to 325 |

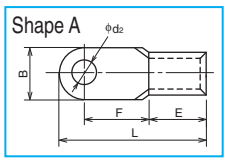


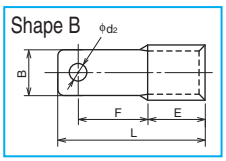


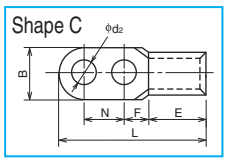

# 5. Busbar

The size of the conductor can be connected is shown on the outline drawing of each model. The following special busbars are available. Use them as needed. When using any busbar, isolate it from the bare busbar on the circuit breaker power supply side with an insulating barrier.

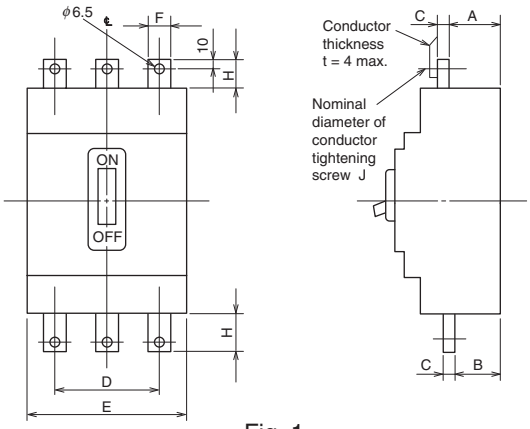


Fig. 1

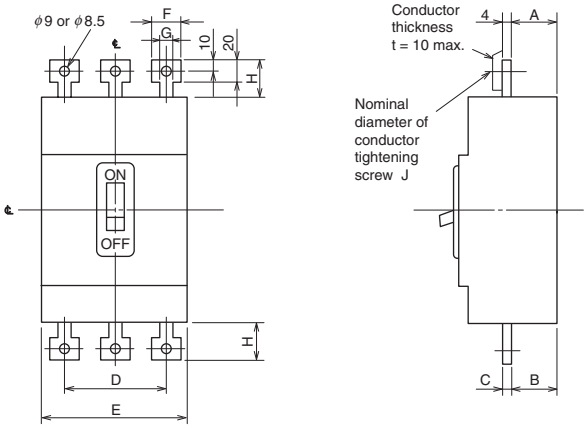


Fig. 2

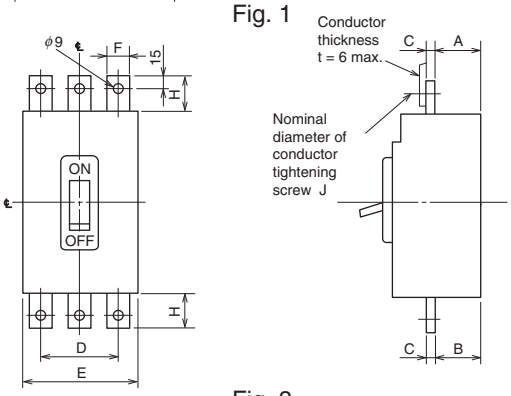


Fig. 3

**Table 5-7 Table of variable dimensions**

| Type name | Applicable models | | Outline and dimentions | Busbar | | | | | | | | | |
|---|---|---|---|---|---|---|---|---|---|---|---|---|---|
| | MCCB | ELCB | | Fig. | A | B | C | D | E | F | G | H | J |
| FB-05SV | NF32-SV<br>NF63-CV (50A or below)<br>NF63-SV (50A or below)<br>NF63-HV (50A or below) | NV32-SV<br>NV63-CV (50A or below)<br>NV63-SV (50A or below)<br>NV63-HV (50A or below) | 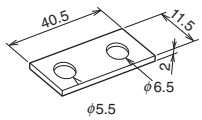  | 1 | 24 | 24 | 2 | 50 | 75 | 11.5 | – | 25 | M5x0.8 |
| FB-1SV | NF125-CV, NF125-SV<br>NF125-HV, NF125-UV | NV125-CV<br>NV125-SV<br>NV125-HV | 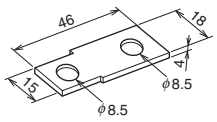  | 2 | 24 | 24 | 4 | 60 | 90 | 18 | 15 | 29 | M8 |
| FB-2SV | NF125-SEV<br>NF125-HEV, NF125-RGV<br>NF250-CV, NF250-SV, NF250-HV<br>NF250-UV, NF250-SEV<br>NF250-HEV, NF250-RGV<br>NF125-SGV/LGV/HGV<br>NF160-SGV/LGV/HGV<br>NF250-SGV/LGV/HGV | NV125-SEV<br>NV125-HEV<br>NV250-CV, NV250-SV<br>NV250-HV, NV250-SEV<br>NV250-HEV | 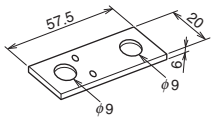  | 3 | 24 | 24 | 6 | 70 | 105 | 20 | – | 37 | M8 |

# 6. Insulation Distance on Power Source Side

## ●Basic concept

### Insulation distance (distance indicated in standards)

Be sure to at least secure the insulation distances (spatial distance and creeping distance) specified by the codes and standards of the relevant equipment and facilities where the circuit breakers are installed.
It is recommended that insulation barriers and insulation tape be used to enhance the electrical insulation between bare-live parts and between bare-live parts and ground to avoid accidents otherwise caused by a loose metal piece, conductive dust, abnormal surge voltage in the circuit or a similar event so as to improve the reliability of panels.

### Arc Space (insulation space)

At the exhaust outlet side of breaker, arc space is necessary. When the actual load circuit is opened, especially when a large current such as overload or short-circuit is interrupted, ionized gas is emitted from the exhaust outlet. This gas can cause a short circuit between bare, live parts such as busbars, and also can cause grounding faults between conductive installation metal panels.
Therefore, it is important to secure enough arc space at the exhaust outlet side of the breaker and to strengthen insulation of parts exposed to the gas. In addition, securing enough space at the front of the exhaust outlet is necessary, because when the gas emission is blocked, failures such as deterioration of breaking performance can be caused.

## ●Insulation required part

With regard to insulation of bear, live parts of the line side of the breaker, please make sure to insulate at least C part C indicated in the diagram above with insulation tape, a tube or a terminal cover.

①A : Distance from the circuit breaker to the ceiling plate
②B1 : Distance from the circuit breaker to the uncovered conducting part of the upper circuit breaker terminal (front connection)
③B2 : Distance from the lower circuit breaker to the end face of the upper circuit breaker (rear connection)
④D1 : Distance from the side of the breaker to the side plate
⑤C : Insulated length of the power source terminal of the circuit breaker (front connection)
Please secure insulation using insulating tape, insulating tubing, insulation barrier, or a terminal cover, between bare charge parts within this size range. Please refer to a table a necessary size must.
◇When using insulation tape and insulation tubing together with insulation barriers and terminal covers, make them overlap with the other by at least 10 mm.
◇For the models with insulation barriers supplied as standard, please make sure to use the barriers.
a : clearance specified in standard
⑥D2 : Side-to-side spacing of breakers
While the circuit breakers can basically be installed together without a clearance in between, be sure to observe the following instructions.
◇It is desirable to install an insulation barrier between the adjacent circuit breakers or insulate the bare-live parts considering the effect of cutoff gas.
◇Be sure to secure the insulation distance (dimension a) as the minimum, indispensable requirement.
◇With a leakage circuit breaker and a leakage alarm circuit breaker installed in close contact with the other, a current of 2,500A or higher flowing through one of the circuit breakers could cause the other to operate falsely.
Be sure to secure a distance of at least 50 mm in between.
◇A circuit breaker of 400-ampere frame or larger with an SHT or a UVT could operate falsely if a current of 50 kA or higher flows through the adjacent circuit breaker.
Be sure to secure a distance of at least 50 mm in between.

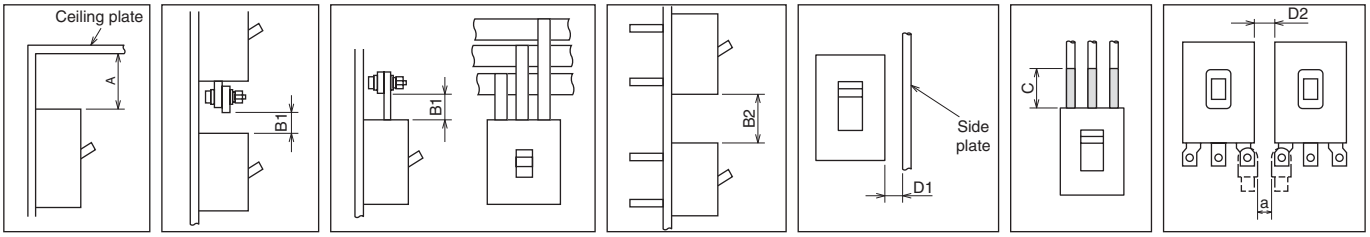


### Table 5-8 Insulation distance (mm) (440VAC or below) *Figures in parentheses are for 230VAC or below.

| Class • Series | Model | | Ceiling plate | | | Vertical spacing | | C | Horizontal spacing |
|---|---|---|---|---|---|---|---|---|---|
| | | | A | | | B1, B2 | | | |
| | MCCB | ELCB | Uncovered metal Plate: Without terminal cover | Uncovered metal Plate: With terminal cover | Insulated plate, coated plate | Without terminal cover | With terminal cover | | D1 |
| C • S • H • R • MB | NF30-CS | – | 10 | 10 | 10 | 20 | 20 | (*1) | 20 |
| | NF32-SV, NF63-CV | NV63-CV | 5 | 5 | 5 | 20 | 20 | (*1) | 20 |
| | NF63-SV, NF63-HV | NV32-SV, NV63-SV, NV63-HV | 10 | 10 | 10 | 30 | 30 | 30 | 25 |
| | NF125-CV | NV125-CV | 50(30) | 40(30) | 10 | 50 | 50 | (*1) | 25 |
| | NF125-SV | NV125-SV | 50(10) | 30(10) | 10 | 50 | 50 | 50 | 25 |
| | NF125-HV | NV125-HV | 50 | 40 | 40 | 80 | 80 | 80 | 40 |
| | NF250-CV | NV250-CV | 40 | 40 | 40 | 50 | 50 | 50 | 50 |
| | NF125-SEV, NF250-SV, NF250-SEV<br>NF125-SGV, NF160-SGV, NF250-SGV | NV125-SEV, NV250-SV, NV250-SEV | 70(40) | 40 | 40 | 70(50) | 50 | 70(50) | 50 |
| | NF125-HEV, NF250-HV, NF250-HEV<br>NF125-LGV, NF160-LGV, NF250-LGV<br>NF125-HGV, NF160-HGV, NF250-HGV | NV125-HEV, NV250-HV, NV250-HEV | 80 | 60 | 60 | 80 | 80 | 80 | 60 |
| | NF400-CW | NV400-CW | 60 | 60 | 60 | 60 | 60 | 60 | 40 |
| | NF400-SW, NF400-SEW | NV400-SW, NV400-SEW | 70 | 70 | 70 | 70 | 70 | 70 | 70 |
| | NF400-HEW, NF400-REW | NV400-HEW, NV400-REW | 200 | 200 | 200 | 200 | 200 | 200 | 150 |
| | NF630-SW, NF630-SEW, NF630-CW | NV630-CW, NV630-SW, NV630-SEW | 70 | 70 | 70 | 70 | 70 | 70 | 70 |
| | NF630-HEW, NF630-REW | NV630-HEW | 200 | 200 | 200 | 200 | 200 | 200 | 150 |
| | NF800-SEW, NF800-CEW | NV800-SEW | 80 | 80 | 80 | 80 | 80 | 80 | 80 |
| | NF800-HEW, NF800-REW | NV800-HEW | 200 | 200 | 200 | 200 | 200 | 200 | 150 |
| | NF1000-SEW, NF1250-SEW<br>NF1600-SEW | – | 100 | 100 | 100 | 100 | 100 | 100 | 100 |
| R • U | NF125-RGV, NF250-RGV | – | 30 (*6) | 30 (*6) | 30 (*6) | 50 (*9) | 50 (*9) | 50 | 5 |
| | NF125-UV, NF250-UV | – | (*1) | (*1) | (*1) | (*1) | (*1) | (*1) | 25 |
| | NF400-UEW | – | 70 | 70 | 70 | 70 | 70 | 70 | 70 |
| | NF800-UEW | – | 80 | 80 | 80 | 80 | 80 | 80 | 80 |
| BH | BH-K, BH-K100 | – | (*1) | | (*1) | (*1) | | (*1) | 20 |
| UL | NF225-CWU | – | (40) | – | (40) | (50) | – | (50) | (50) |
| | NF50-SVFU | – | 10 (*6) | 10 (*6) | 10 (*6) | 20 (*7) | 20 (*7) | 30 | 10 |
| | NF100-CVFU | – | 50(25) | 40(25) | 10 | 50 | 50 | 50 | 25(15) |
| | NF125-SVU(*4) | – | 40(10) | 30(10) | 10 | 50 | 50 | 50 | 25(20) |
| | NF125-HVU(*5) | – | 40 | 40 | 40 | 80 | 80 | 80 | 25(20) |
| | NF250-SVU(*4) | – | 40 | 40 | 40 | 70(50) | 50 | 70(50) | 50(20) |
| | NF250-HVU(*5) | – | 40 | 40 | 40 | 80 | 80 | 80 | 50(20) |
| | NF-SKW(*5) | – | 70 | 70 | 70 | 70 | 70 | 70 | 70 |
| | NF-SLW(*5) | – | 70 | 70 | 70 | 70 | 70 | 70 | 70 |

Remark: 1. The table shows the dimensions in the case of the use of a large terminal cover (TC-L).
Notes *1 It is not necessary to provide an insulation distance (an arc space) on the power supply side. However, if a grounding metal piece or the like comes in close contact with the terminal, be sure to completely insulate the terminals or the bare-live parts of the cable conductors.
*2 At more than 440 V AC, the distance shall be 10 mm.
*3 For 480Y/277V AC.
*4 For 480V AC.
*5 For 600Y/347V AC.
*6 An exhaust port is provided also on the circuit breaker load side. Secure the dimension A both on the power supply side and on the load side.
*7 When any of the circuit breakers NF125-RGB to NF250-RGV is used on the upstream side, an exhaust port is provided also on the circuit breaker load side. Secure the larger distance of the dimension B1 of NF125-RGV, NF250-RGV or NF50-SVFU and the dimension B1 of the downstream circuit breaker.

# 7. Effect of Installation Orientation

Installation orientation does not affect the operating characteristics of circuit breakers of electronic or thermo-magnetic operation types. However, the installation orientation affects the operating current of fully magnetic type circuit breakers as the iron core in the oil dash pot is under gravitational force.
It is generally suggested they be installed vertically.

**●Hydraulic-magnetic (The same applies to other models of hydraulic-magnetic type.)**

| MCCB | |
|---|---|
| Class | Model |
| C | NF30-CS |

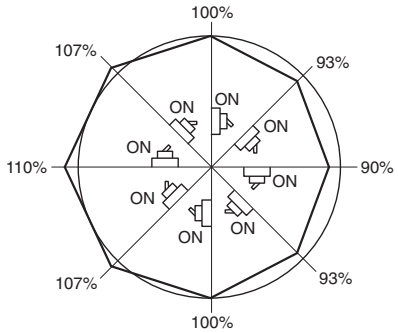


Rate of change of rated current by mounting angle

# 8. Connection of Line and Load

The standard wiring of line and load on the circuit breaker is as shown in (a) normal connection on the right.
Avoid the wiring shown in (b) reverse connection. This may lead to a decrease in breaking performance.
However, the reverse connection is allowed for the following models (excluding MDU breakers).

(a) Normal connection (b) Reserve connection

**Connection methods**

| | |
|---|---|
| NF-C, NF-S, NF-H, NF-R and NF-U class<br>BH-P, CP30-BA, NV-C, S, H and R class of 400 to 800AF, NF100-CVFU, NF125-SVU, NF125-HVU, NF250-SVU, NF250-HVU | Reverse connection is allowed for the standard models. |

# 6

# Accessories


## 1 Internal Accessories 104

1) Internal Accessories ..... 104
2) Kinds of Internal Accessories ..... 105
3) Operations and Ratings of Switches ..... 105
4) Maximum Number of Internal Accessories ..... 106
5) Cassette Type Accessories ..... 111
6) Shunt Trip (SHT) ..... 113
7) Undervoltage Trip (UVT) ..... 114
8) Lead Wire Drawing ..... 116
9) Lead Wire Terminal Block ..... 116
10) Test Button Module (TBM) ..... 117
11) Pre-Alarm Module (PAL) ..... 118

## 2 External Accessories 119

1) F-type Operating Handle (Breaker Mount Type) ..... 119
2) V-type Operating Handle (Door Mount Type) ..... 121
3) Terminal Covers ..... 123
4) Insulating Barriers ..... 126
5) Handle Lock Devices, Lock Covers, Auxiliary Handles, Card Holders ..... 129
6) Mechanical Interlocks (MI) ..... 131
7) Boxes for Circuit Breakers and Boxed Circuit Breakers ..... 132
8) Electrical Operated Circuit Breakers and Electrical Operation Devices ..... 135
9) Distribution Board Mounting Parts, Lock Covers and Handle Caps ..... 138
10) IEC 35-mm Rail Mounting Adapters ..... 139

# 1. Internal Accessories

The accessories to be installed in circuit breakers include the followings. For the numbers of the accessories which can be installed, refer to the tables on pages 106 to 110. The standard internal accessories have lead wires (450 mm long) drawn out. (However, some of Models UVT and TBM have vertical lead wire terminal blocks as standard.)
When circuit breakers are installed side by side, keep a space of 8 mm or more for lead wires between the circuit breakers. (Models with lead wires drawn out toward load and models with lead wire grooves in the side faces can be installed in close contact.)

## SHT (Shunt trip)

Device to electrically trip a circuit breaker from a distance. The allowable operating voltage range is 70 to 110% of the rated voltage. (JIS C 8201-2-1 Ann.1, Ann.2)

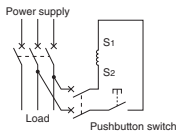


Connection diagram

## AL (Alarm switch)

Switch to electrically display the tripping status of circuit breaker

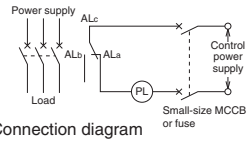


Connection diagram

## AX (Auxiliary switch)

Switch to electrically display the ON-OFF status of circuit breaker

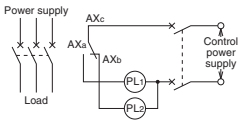


Connection diagram

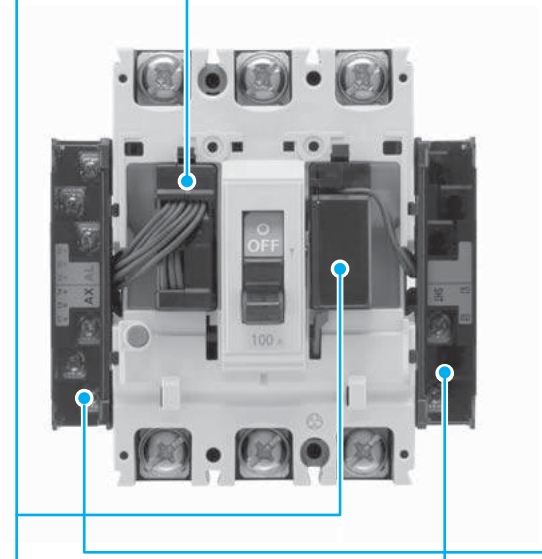

## UVT (Undervoltage trip)

Device to automatically trip a circuit breaker when the voltage drops. The operating voltage is 70 to 35% of the UVT rated voltage. (JIS C 8201-2-1 Ann.1)
When the voltage recovers at least to 85% or more, the circuit breaker can be turned on after the device is manually reset.

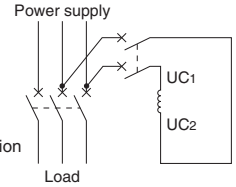


Connection diagram

## SLT (Lead wire terminal block)

Terminals for connecting with internal accessories. The terminal block will be manufactured to order. For the detailed dimensions, refer to pages 116 and 117. (The dimensions of SLT slightly vary depending on the number of installed accessories and the model.)
However, circuit breakers with a frame size of 400A and above having an electrical operation device are normally provided with SLT.

## TBM (Test button module)

Unit to perform test under voltage from a distance. TBMs can be connected in parallel. (The standard TBMs are provided with SLT. In the case of the flush plate type, the external dimensions are partially different from those of the standard type.)

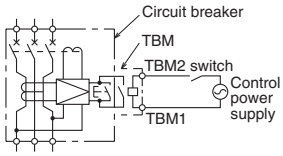


TBM circuit diagram

# 2. Kinds of Internal Accessories

**Table 6-1**

| Accessory name | | Nameplate (sample) | Accessory name | | Nameplate (sample) |
|---|---|---|---|---|---|
| **AL** | **Alarm switch** | | **EAL** | **Earth leakage trip alarm switch** | |
| **AX** | **Auxiliary switch** | | | | |
| **SHT** | **Shunt tripping device** | | **TBM** | **Test button module** | |
| **UVT** | **Undervoltage tripping device** | | | | |

# 3. Operations and Ratings of Switches

### Table 6-2 Operations of AL switch

| Status of circuit breaker | Contact status of AL switch |
|---|---|
| Off or On | 98/ALa (open)<br>96/ALb (closed)<br>95/ALc |
| Trip | 98/ALa (closed)<br>96/ALb (open)<br>95/ALc |

* The terminal numbers 98/ALa, 96/ALb and 95/ALc may vary depending on the number of installed switches and the installation poles.

### Table 6-3 Operations of AX switch

| Status of circuit breaker | Contact status of AX switch |
|---|---|
| Off or Trip | 14/AXa (open)<br>12/AXb (closed)<br>11/AXc |
| On | 14/AXa (closed)<br>12/AXb (open)<br>11/AXc |

* The terminal numbers 14/AXa, 12/AXb and 11/AXc may vary depending on the number of installed switches and the installation poles.

### Table 6-4 Ratings of AL and AX switches

| Applied switch | AC | | | DC | | |
|---|---|---|---|---|---|---|
| | Voltage V | Current A | | Voltage V | Current A | |
| | | Resistive load | Inductive load | | Resistive load | Inductive load |
| A | (250) | (1) | (0.5) | (50) | (1) | (0.5) |
| | 125 | 3 | (1) | 30 | (2) | (1) |
| S | 460 | — | — | 250 | 0.2 | 0.2 |
| | 250 | 3 | 2 | 125 | 0.4 | 0.4 |
| | 125 | 5 | 3 | 30 | 4 | 3 |
| V | 460 | 5 | 2 | 250 | 0.3 | 0.3 |
| | 250 | 10 | 10 | 125 | 0.6 | 0.6 |
| | 125 | 10 | 10 | 30 | 10 | 6 |

Remarks: 1. The ratings in parentheses do not conform to UL.
2. For the applied switches, refer to Tables 6-9-1 to 6-14-1.

# 4. Maximum Number of Internal Accessories

## ■MCCB and Motor Protection Breakers

**Table 6-5 Table of maximum number of internal accessories**

Handle of circuit breaker
Left pole → ← Right pole

●AL ○AX ▨ SHT or UVT
■ PAL
→ Outgoing direction of lead wires
▭ are cassette type accessories. (Some of UVT are not provided with cassettes. Refer to page XXX for details.)

| Model | | | | | | | | |
|---|---|---|---|---|---|---|---|---|
| | C | NF30-CS | NF63-CV<br>NF125-CV | NF63-CV<br>NF125-CV<br>NF250-CV | | NF400-CW<br>NF630-CW | NF800-CEW | |
| | S | | NF32-SV<br>NF63-SV<br>NF125-SV | NF32-SV<br>NF63-SV<br>NF125-SV<br>NF125-SGV<br>NF160-SGV<br>NF250-SV<br>NF250-SGV | NF125-SEV<br>NF250-SEV | NF400-SW<br>NF400-SEW<br>NF630-SW<br>NF630-SEW | NF800-SEW<br>NF800-SDW | NF1000-SEW<br>NF1250-SEW<br>NF1600-SEW |
| | L • H • R | | NF63-HV | NF63-HV<br>NF125-HV<br>NF125-LGV<br>NF125-HGV<br>NF125-RGV<br>NF160-LGV<br>NF160-HGV<br>NF250-HV<br>NF250-LGV<br>NF250-HGV<br>NF250-RGV | NF125-HEV<br>NF250-HEV | NF400-HEW<br>NF400-REW<br>NF630-HEW<br>NF630-REW | NF800-HEW<br>NF800-REW | |
| | U | | | NF125-UV<br>NF250-UV | | NF400-UEW(3P) | NF400-UEW(4P)<br>NF800-UEW | |
| Number of poles | | 2 or 3 poles | 2 poles | 2, 3 or 4 poles | 3, 4 poles | 2, 3 or 4 poles | 2, 3 or 4 poles | 2, 3 or 4 poles |
| AL and AX (standard) switches | | S | | | | | | V |
| Accessory | | | | | | | | |
| AL | | (*3) ● | ● | ❶ ❷ | ❶ ❷ | ● ● | (*7) ● ● ● | ● ● ● |
| AX | | (*3) ○ | ① ② | ① ③ ② | ① ③ ② | ① ② ③ ④ | (*7) ①⑤ ②⑥ ③ ④ | ① ② ⑤ ③ ④ ⑥ |
| SHT or UVT | | | (*1) | (*1)(*5) | (*1)(*5) | (*1) (*6) | (*1) (*6) | (*1) |
| AL + AX | | (*3) ● ○ 3-pole product only | ● ○ | (*2) ❶ ❷ ① ② | (*2) ❶ ❷ ① ② | (*7) ● ○ ● ○ | (*7) ● ○ ● ○ | ● ● ● ○ ○ ○ |
| AL + SHT or UVT | | | | (*1) ● | (*1) ● | (*1) (*6) (*7) (*8) ● ● ● | (*1) (*6) (*7) (*8) ● ● ● | (*1) ● ● ● |
| AX + SHT or UVT | | | | (*1) ① ② | (*1) ① ② | (*1) (*6) (*7) (*8) ○ ○ ③ ① ② | (*1) (*6) (*7) (*8) ①③ ②④ ⑤ ③ ④ ① ② | (*1) ○ ○ ○ |
| AL + AX + SHT or UVT | | | | (*1) ● ○ | (*1) ● ○ | (*1) (*6) (*7) (*8) ● ○ ● ○ | (*1) (*6) (*7) (*8) ● ○ ● ○ | (*1) ● ○ |
| PAL (contact output) | | | | | (*4) ■ | (*9) ■ Option for NF400-SEW, HEW, REW and UEW and NF630-SEW, HEW and REW | (*9) ■ Option for NF800-CEW, SEW, HEW and REW and NF800-UEW | (*9) ■ Option for NF1000-SEW and NF1250-SEW and NF1600-SEW |

Notes
*1 When UVT is provided, the UVT voltage module will come in the vertical lead wire terminal block type. (SHT does not have a voltage module.)
*2 The second AX can be installed in place of the AL on the left pole side. When placing an order, specify the incorporation of the switches in the body.
*3 Although the lead wires are normally drawn out laterally, those with lead wires drawn out toward load are available. (Only for front connection type)
*4 PAL (contact output) can be installed together with AL and AX on the left pole side. (It cannot be installed together with SHT or UVT.) The standard type is provided with SLT. PAL control voltage (compatible with 100 to 200 V AC) is necessary.
*5 SHT and UVT can be installed on the left side.
*6 SHT and UVT are normally installed on the right pole side. If you intend to install them on the left pole side, specify so. (The reset preventing UVT must be installed on the left pole side.)
*7 In the case where three or more accessories are installed on the left pole side and AL, AX or AL and AX are installed on the pole on which SLT, SHT or UVT is installed, the SLT will be manufactured to order.
*8 When AL, AX or AL and AX are installed on the pole on which UVT is installed, the UVT voltage module must be installed separately.
*9 SLT is provided as standard. A control power supply (100 to 200 V AC) is required. (In this case, other internal accessories cannot be installed on the right pole side.)

Remarks: 1. For electrically operated automatic reset type circuit breakers having a frame size of 400A or above, the numbers of AL switches which can be installed are smaller by 1 than the values shown above.
2. The encircled numbers indicate the order of installation.

## ELCB

**Table 6-6 Table of maximum number of internal accessories**

●AL ○AX SHT or UVT

Handle of circuit breaker
Left pole → ← Right pole
▭ are cassette type accessories.

➡ TBM →Outgoing direction of lead wires

| Model | | | |
|---|---|---|---|
| C | NV63-CV<br>NV125-CV<br>NV250-CV | NV400-CW<br>NV630-CW | |
| S | NV32-SV<br>NV63-SV<br>NV125-SV<br>NV125-SEV<br>NV250-SV<br>NV250-SEV | NV400-SW<br>NV400-SEW<br>NV630-SW<br>NV630-SEW | NV800-SEW |
| H • R | NV63-HV<br>NV125-HV<br>NV125-HEV<br>NV250-HV<br>NV250-HEV | NV400-HEW<br>NV400-REW<br>NV630-HEW | NV800-HEW |
| U | | | |
| Number of poles | 2, 3, or 4 poles | 3 poles | |
| Switch | S | | |
| Accessory | | | |
| AL | ● | ●<br>● | ●<br>●<br>● (*6) |
| AX | ① ○<br>② ○ | ○<br>○ | ○○<br>○○ (*6) |
| AL + AX | ●<br>○ (*2) | ●○<br>●○ (*6) | ●○<br>●○ (*6) |
| SHT or UVT | (*3) | (*5) | (*5) |
| AL + SHT or UVT | | ● (*4) (*5) (*6) | ● (*4) (*5) (*6) |
| AX + SHT or UVT | | ○ (*4) (*5) (*6) | ○ (*4) (*5) (*6) |
| AL + AX + SHT or UVT | | ●<br>○ (*4) (*5) (*6) | ●●<br>○○ (*4) (*5) (*6) |
| TBM | ➡ (*1) | ➡ (*1) | ➡ (*1) |

Notes *1 The standard type is provided with SLT. Only in the case of 24 V DC, specify the control voltage.
*2 The second AX can be installed in place of the AL on the left pole side. When placing an order, specify the incorporation of the switches in the body.
*3 When UVT is provided, the UVT voltage module will come in the vertical lead wire terminal block type. (SHT does not have a voltage module.)
*4 When AL, AX or AL and AX are installed on the pole on which UVT is installed, the UVF voltage module must be separately installed.
*5 When the accessory is provided with UVT, the UVT voltage module has a vertical lead wire terminal block. The UVT is not provided with a cassette.
*6 SLT to be used when three or more accessories are installed on the left pole is manufactured to order.

Remarks: 1. The encircled numbers indicate the order of installation.
2. TBM can be installed regardless of the number of installed AL, AX, SHT and UVT.

## UL 489 Listed Circuit Breakers

**Table 6-7 Table of maximum number of internal accessories**

Handle of circuit breaker — Left pole → ← Right pole

● AL ○ AX SHT or UVT TBM → Outgoing direction of lead wires

▭ are cassette type accessories.

| Model / MCCB | NF50-SVFU NF100-CVFU | NF50-SVFU NF100-CVFU | NF125-SVU NF125-HVU NF250-SVU NF250-HVU | NF225-CWU | NF-SKW | NF-SLW | | | |
|---|---|---|---|---|---|---|---|---|---|
| ELCB | | | | | | | NV50-SVFU | NV50-SVFU NV100-CVFU | NV125-SVU NV125-HVU NV250-SVU NV250-HVU |
| Number of poles | 2 poles | 3 poles | 2 or 3 poles | 3 poles | 3 poles | 3 poles | 2 poles | 3 poles | 3 poles |
| AL and AX (standard) switches | S | | | | | | | | |
| Accessory | | | | | | | | | |
| AL | ● | ❶ ❷ | ❶ ❷ | ❶ ❷ | ● ● | (*4) ● ● ● | | ● | ● |
| AX | ① ② | ① ③ ② | ① ③ ② | ① ② | ① ② ③ ④ | (*4) ①⑤ ②⑥ ③ ④ | | ① ② | ① ② |
| SHT or UVT | (*1) (*6) | (*1) (*3) (*6) | (*1) (*3) | (*1) | (*1) (*3) | (*1) (*3) | | (*1) (*6) | (*1) |
| AL + AX | ● ○ | (*2) ❶ ❷ ① ② | (*2) ❶ ❷ ① ② | ❶ ❷ ① ② | (*6) ●○ ●○ | (*6) ●○ ●○ | | (*2) ● ○ | (*2) ● ○ |
| AL + SHT or UVT | | (*1) (*6) ● | (*1) ● | (*1) ● | (*1) (*3) (*4) (*5) ● ● ● | (*1) (*3) (*4) (*5) ● ● ● ● ● | | | |
| AX + SHT or UVT | | (*1) (*6) ① ② | (*1) ① ② | (*1) ○ | (*1) (*3) (*4) (*5) ○ ○ ⑤ ① ② | (*1) (*3) (*4) (*5) ①③ ②④ ⑤ ⑤ ① ④ ② | | | |
| AL + AX + SHT or UVT | | (*1) (*6) ● ○ | (*1) ● ○ | (*1) ○ | (*1)(*3) (*4)(*5) ●○ ●○ ●○ ○ | (*1)(*3) (*4)(*5) ●○ ●○ ●○ ●○ | | | |
| TBM | | | | | | | (*7) ➡ | (*7) ➡ | (*7) ➡ |

Notes *1 When UVT is provided, the UVT voltage module will come in the vertical lead wire terminal block type. (SHT does not have a voltage module.)
*2 SHT cannot be installed.
*3 SHT and UVT are normally installed on the right pole side. If you intend to install them on the left pole side, specify so.
*4 In the case where three or more accessories are installed on the left pole side and AL, AX or AL and AX are installed on the pole on which SLT, SHT or UVT is installed, the SLT will be manufactured to order.
*5 When AL, AX or AL and AX are installed on the pole on which UVT is installed, the UVT voltage module must be installed separately.
*6 UVT of NF50-SVFU and NV50-SVFU are not provided with cassettes.
*7 The standard type is provided with SLT. Only in the case of 24 V DC, specify the control voltage.

Remarks: 1. The encircled numbers indicate the order of installation.
2. AL and AX for minute load can be manufactured to order. (These switches have been certified only by UL and CSA. They have not been certified by TUV.)

## MDU Breakers

### Table 6-8-1 Table of maximum number of internal accessories

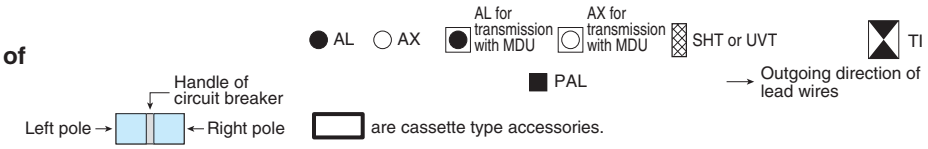


| Model | NF400-SEP with MDU<br>NF400-HEP with MDU | NF600-SEP with MDU<br>NF600-HEP with MDU<br>NF800-SEP with MDU<br>NF800-HEP with MDU |
|---|---|---|
| Number of poles | 3 or 4 poles | |
| switch | S | |
| Accessory | | |
| AL | | (*1) |
| AX | | (*1) |
| SHT | (*2) | (*2) |
| UVT | (*3) (*4) | (*3) (*4) |
| AL + AX | (*1) | (*1) |
| AL + SHT | (*1) (*2) | (*1) (*2) |
| AX + SHT | (*1) (*2) | (*1) (*2) |
| AL + AX + SHT | (*1) (*2) | (*1) (*2) |
| AL + UVT | (*1) (*3) (*4) (*5) | (*1) (*3) (*4) (*5) |
| AX + UVT | (*1) (*3) (*4) (*5) | (*1) (*3) (*4) (*5) |
| AL + AX + UVT | (*1) (*3) (*4) (*5) | (*1) (*3) (*4) (*5) |
| PAL | (*6) | (*6) |
| EPAL | ——— | ——— |
| TI | (*6)<br>With contact outputs for PAL and OAL | (*6)<br>With contact outputs for PAL and OAL |

Notes *1 In the case where three or more accessories are installed on the left pole side and AL, AX or AL and AX are installed on the pole on which SLT, SHT or UVT is installed, the SLT will be manufactured to order.
*2 SHT and UVT are normally installed on the right pole side. If you intend to install them on the left pole side, specify so. (The reset preventing UVT must be installed on the left pole side.)
*3 The UVT voltage module is installed externally. UTV is not provided with a cassette.
*4 UVT is normally installed on the right pole. If you intend to install it on the left pole, specify so.
*5 When AL, AX or AL and AX are installed on the pole on which UVT is installed, the UVT voltage module must be installed separately.
*6 The standard model has a terminal block. A 5-VA control power supply (compatible with 100 to 240 V AC/DC) is required. (In this case, another internal accessory cannot be installed on the right pole.)

Remark: 1. The encircled numbers indicate the order of installation.

## MDU Breakers

### Table 6-8-2 Table of maximum number of internal accessories

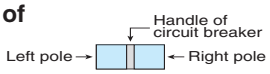

| Model / Number of poles / switch / Accessory | NF400-SEP with MDU<br>NF400-HEP with MDU | NF600-SEP with MDU<br>NF600-HEP with MDU<br>NF800-SEP with MDU<br>NF800-HEP with MDU |
|---|---|---|
| Number of poles | 3 or 4 poles | |
| switch | S | |
| AL for transmission with MDU (*1) | | |
| AX for transmission with MDU (*1) | | |
| AL + AX for transmission with MDU (*1) | | |
| AL + AX + AL for transmission with MDU (*1) | | |
| AL+AX + AX for transmission with MDU (*1) | | |
| AL + AX + AL + AX for transmission with MDU (*1) | | |

Note *1 To transmit signals from AL, AX or AL and AX, AL and/or AX for transmission with the MDU are installed on the left pole side. In this case, the lead wires of AL and/or AX for transmission with the MDU installed on the left pole side cannot be drawn out to the outside or fitted to the terminal block.

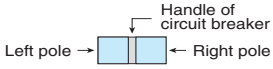


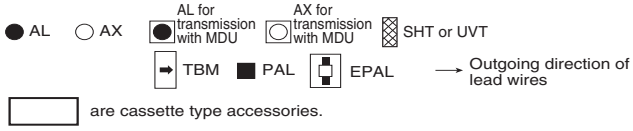


| Model / Number of poles / switch / Accessory | NF250-SEV with MDU<br>NF250-HEV with MDU | NV250-SEV with MDU<br>NV250-HEV with MDU |
|---|---|---|
| Number of poles | 3 or 4 poles | 3 pole |
| switch | S | |
| AL | | |
| AX | | |
| AL + AX | (*1) | (*1) |
| SHT or UVT | (*2) | (*2) |
| AL + SHT or UVT | (*2) | — |
| AX + SHT or UVT | (*2) | — |
| AL + AX + SHT or UVT | (*2) | — |
| TBM | — | (*3) |
| ATU | — | — |
| PAL | (*4) | (*4) |
| EPAL | — | (*4)<br>With contact outputs for PAL, EPAL and EAL |
| AL for transmission with MDU (*5) | | |
| AL for transmission with MDU AX (*5) | | |
| AL for transmission with MDU AL + AX (*5) | | |
| AL for transmission with MDU AL + AX + AL (*5) | | — |
| AL for transmission with MDU AL + AX + AX (*5) | | — |
| AL for transmission with MDU AL + AX + AL + AX (*5) | | — |

Notes *1 The second AX can be installed in place of the AL on the left pole side. When placing an order, specify the incorporation of the switches in the body.
*2 When UVT is provided, the UVT voltage module will come in the vertical lead wire terminal block type. (SHT does not have a voltage module.)
*3 The device is provided with SLT. Only in the case of 24 V DC, specify the control power supply. (Compatible with standard voltage from 100 to 240 V AC/DC.)
*4 The device is provided with a terminal block. A control power supply (compatible with 100 to 240 V AC/DC) is required. (In this case, another internal accessory cannot be installed on the right pole.)
*5 To transmit signals from AL, AX or AL and AX, AL and/or AX for transmission with the MDU are installed on the left pole side. In this case, the lead wires of AL and/or AX for transmission with the MDU installed on the left pole side cannot be drawn out to the outside or fitted to the terminal block. In the case of 225A frame circuit breakers, AL for transmission with the MDU must be installed for fault current measurement.

Remark: 1. The encircled numbers indicate the order of installation.

# 5. Cassette Type Accessories

The internal accessories for major models having a frame size from 30 to 800 A come in cassettes, and they can be installed to and removed from circuit breakers by the user.
Some cassette type accessories have lead wires drawn out, and others have vertical lead wire terminal blocks (SLT). (These parts are supplied by 10 pieces for frame size from 30 to 250 A or by 1 piece for frame size from 400 to 800 A.)

## ■Applicable models and kinds of cassette type accessories

| | Model | Alarm switch (AL) | Auxiliary switch (AX) | Shunt tripping device (SHT) | Undervoltage tripping device (UVT) |
|---|---|---|---|---|---|
| MCCB | NF63-CV~NF250-CV, NF32-SV~NF250-SV<br>NF63-HV~NF250-HV<br>NF125-SGV~NF250-SGV, NF125-LGV~NF250-LGV<br>NF125-HGV~NF250-HGV<br>NF125-SEV, NF250-SEV, NF125-HEV, NF250-HEV<br>NF125-RGV, NF250-RGV, NF125-UV, NF250-UV<br>NF100-CVFU, NF125-SVU/HVU, NF250-SVU/HVU | ○ | ○ | ○ | ○ |
| | NF50-SVFU, NF400-CW, NF630-CW, NF800-CEW<br>NF400-SW, NF630-SW, NF400-SEW~NF800-SEW<br>NF800-SDW, NF400-HEW~NF800-HEW<br>NF400-REW~NF800-REW, NF400-UEW, NF800-UEW | ○ | ○ | ○ | – |
| ELCB | NV63-CV~NV250-CV, NV32-SV~NV250-SV<br>NV63-HV~HV250-HV<br>NV125-SEV, NV250-SEV, NV125-HEV, NV250-HEV<br>NV100-CVFU, NV125-SVU/HVU, NV250-SVU/HVU | ○ | ○ | ○ | ○ |
| | NV50-SVFU, NV400-CW, NV630-CW<br>NV400-SW, NV630-SW, NV400-SEW~NV800-SEW<br>NV400-HEW~NV800-HEW, NV400-REW | ○ | ○ | ○ | – |

## ■Procedure for installing cassette type accessories

1. Press the trip button (PTT) to trip the circuit breaker. (*1)

2. Loosen the cover screws.

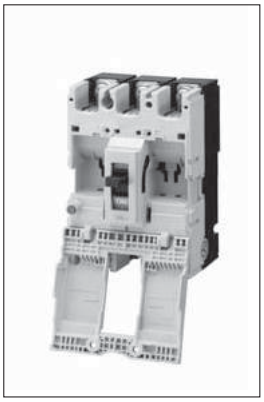

3. Open the cover.

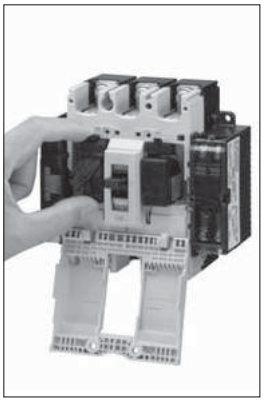

4. Install the cassette type accessory. (*2)

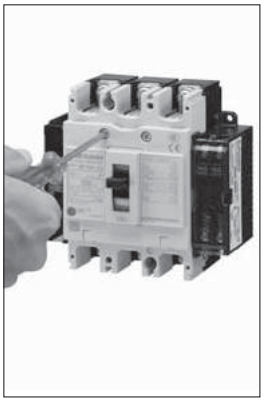

5. Close the cover, and tighten the screws.

Notes *1. When installing any cassette type accessory, set the circuit breaker to the tripped state.
*2. If the inner lid or another accessory has been installed, remove it before installing the accessory.
When any circuit breaker supplied with the inner lid is used without an accessory, fit the inner lid without fail.
Failure to do so may affect the short-circuiting performance.
Models with inner lid: NF125-SV, NF125-HV, NF125-UV
NV125-SV, NV125-HV
NF250-SV, NF250-HV,
NV250-SV, NV250-HV,
NF125-SVU, NF125-HVU, NV125-SVU, NV125-HVU
NF250-SVU, NF250-HVU, NV250-SVU, NV250-HVU
NF250-HEV, NF250-UV
NV250-HEV
NF125-SEV, NF125-HEV,
NV125-SEV, NV125-HEV,
NF400-REW, NF400-UEW
NF630-REW, NV400-REW
NF800-HEW, NF800-REW, NF800-UEW
NV800-HEW

## Cautions when installing

Before installing or removing any cassette type accessory, set the circuit breaker and accessories to the no-voltage state.
Never install a cassette type accessory while the handle is in the ON or OFF position. Doing so may damage the accessory.
When installing an accessory with lead wires drawn out, apply the supplied nameplate to the circuit breaker side face.
When installing an accessory with lead wires drawn out for a frame size of 400 to 800 A, secure the lead wires along the circuit breaker side face with the supplied lead wire retainers.

## Type name

**Table 6-9-1**

| Model MCCB | Model ELCB | Installation pole | AL | AX | AL+AX | SHT | UVTN or UVTS |
|---|---|---|---|---|---|---|---|
| NF50-SVFU | | For right pole | AL-03SVU<br>AL-03SVURS | AX-03SVU<br>AX-03SVURS | ALAX-03SVU<br>ALAX-03SVURS | SHTA240-03SVUR<br>SHTA440-03SVUR<br>SHTD100-03SVUR<br>SHTA240-03SVURS<br>SHTA440-03SVURS<br>SHTD100-03SVURS | – |
| | | For left pole | | | | | |
| | NV50-SVFU | For left pole | AL-03SVU<br>AL-03SVULS | AX-03SVU<br>AX-03SVULS | ALAX-03SVU<br>ALAX-03SVULS | SHTA240-03SVUL<br>SHTA440-03SVUL<br>SHTD100-03SVUL<br>SHTA240-03SVULS<br>SHTA440-03SVULS<br>SHTD100-03SVULS | – |
| NF32-SV, NF63-CV, NF63-SV, NF63-HV<br>NF125-CV, NF125-SV, NF125-HV<br>NF125-SGV, NF125-LGV, NF125-HGV<br>NF160-SGV, NF160-LGV, NF160-HGV<br>NF125-SEV, NF125-HEV<br>NF125-RGV, NF125-UV<br>NF250-CV, NF250-SV, NF250-HV<br>NF250-SGV, NF250-LGV, NF250-HGV<br>NF250-SEV, NF250-HEV<br>NF250-RGV, NF250-UV | | For right pole | AL-05SV<br>AL-05SVRS | AX-05SV<br>AX-05SVRS | ALAX-05SV<br>ALAX-05SVRS | SHTA240-05SVR<br>SHTA550-05SVR<br>SHTD125-05SVR<br>SHTA240-05SVRS<br>SHTA550-05SVRS<br>SHTD125-05SVRS | UVTNAD130-05SVR UVTSAD130-05SVR<br>UVTNA250-05SVR UVTSA250-05SVR<br>UVTNA480-05SVR UVTSA480-05SVR<br>UVTNAD130-05SVRS UVTSAD130-05SVRS<br>UVTNA250-05SVRS UVTSA250-05SVRS<br>UVTNA480-05SVRS UVTSA480-05SVRS |
| | | For left pole | | | | | |
| | NV32-SV, NV63-CV<br>NV63-SV, NV63-HV<br>NV125-CV, NV125-SV<br>NV125-HV<br>NV125-SEV, NV125-HEV<br>NV250-CV, NV250-SV<br>NV250-HV<br>NV250-SEV, NV250-HEV | For left pole | AL-05SV<br>AL-05SVLS | AX-05SV<br>AX-05SVLS | ALAX-05SV<br>ALAX-05SVLS | SHTA240-05SVL<br>SHTA550-05SVL<br>SHTD125-05SVL<br>SHTA240-05SVLS<br>SHTA550-05SVLS<br>SHTD125-05SVLS | UVTNAD130-05SVL UVTSAD130-05SVL<br>UVTNA250-05SVL UVTSA250-05SVL<br>UVTNA480-05SVL UVTSA480-05SVL<br>UVTNAD130-05SVLS UVTSAD130-05SVLS<br>UVTNA250-05SVLS UVTSA250-05SVLS<br>UVTNA480-05SVLS UVTSA480-05SVLS |
| NF100-CVFU<br>NF125-SVU/HVU<br>NF250-SVU/HVU | | For right pole | AL-05SVU<br>AL-05SVURS | AX-05SVU<br>AX-05SVURS | ALAX-05SVU<br>ALAX-05SVURS | SHTA240-05SVUR<br>SHTA550-05SVUR<br>SHTD125-05SVUR<br>SHTA240-05SVURS<br>SHTA550-05SVURS<br>SHTD125-05SVURS | UVTNAD130-05SVUR UVTSAD130-05SVUR<br>UVTNA250-05SVUR UVTSA250-05SVUR<br>UVTNA480-05SVUR UVTSA480-05SVUR<br>UVTNAD130-05SVURS UVTSAD130-05SVURS<br>UVTNA250-05SVURS UVTSA250-05SVURS<br>UVTNA480-05SVURS UVTSA480-05SVURS |
| | | For left pole | | | | | |
| | NV100-CVFU<br>NV125-SVU/HVU<br>NV250-SVU/HVU | For left pole | AL-05SVU<br>AL-05SVULS | AX-05SVU<br>AX-05SVULS | ALAX-05SVU<br>ALAX-05SVULS | SHTA240-05SVUL<br>SHTA550-05SVUL<br>SHTD125-05SVUL<br>SHTA240-05SVULS<br>SHTA550-05SVULS<br>SHTD125-05SVULS | UVTNAD130-05SVUL UVTSAD130-05SVUL<br>UVTNA250-05SVUL UVTSA250-05SVUL<br>UVTNA480-05SVUL UVTSA480-05SVUL<br>UVTNAD130-05SVULS UVTSAD130-05SVULS<br>UVTNA250-05SVULS UVTSA250-05SVULS<br>UVTNA480-05SVULS UVTSA480-05SVULS |
| NF400-CW, NF400-SW, NF400-SEW<br>NF400-HEW, NF400-REW, NF400-UEW<br>NF630-CW, NF630-SW, NF630-SEW<br>NF630-HEW, NF630-REW<br>NF800-CEW, NF800-SDW, NF800-SEW<br>NF800-HEW, NF800-REW, NF800-UEW | | For right pole (2, or 3 poles) | – | AX-4SW<br>AX-4SWRS<br>AX2-4SWRS | – | SHT-4SW<br>SHT-4SWRS | – |
| | | For right pole (4 poles) | – | – | – | SHT-4SWRFS<br>SHT-8SWRFS | – |
| | | For left pole (2, 3 or 4 poles) | | | | | |
| | NV400-CW, NV400-SW<br>NV400-SEW, NV400-HEW<br>NV400-REW<br>NV630-CW, NV630-SW<br>NV630-SEW, NV630-HEW<br>NV800-SEW, NV800-HEW | For left pole (2, 3 or 4 poles) | AL-4SWL<br>AL-4SWLS<br>AL2-4SWLS | AX-4SW<br>AX-4SWLS<br>AX2-4SWLS | ALAX-4SWL<br>ALAX-4SWLS | SHT-4SW<br>SHT-4SWLS | – |

Remarks:
1. For the possibility of installation of accessories and the installation pole, refer to the tables of maximum numbers on pages 106 to 110.
2. AL and AX for minute load can be manufactured to order.
3. Corrosion-proof cassette type AL and AX are not available. When the circuit breaker body is exposed to class 1 tropicalization, class 2 tropicalization, reinforced corrosion resistance treatment or class 2 heat resistance treatment, place an order for the circuit breaker including the accessories.
4. Cassette type accessories with SLT for right pole cannot be installed to 4-pole circuit breakers. Accessories with SLT for right pole to be used in 4-pole circuit breakers are manufactured to order.
5. Cassette type accessories with SLT cannot be installed to flush plate type circuit breakers.
6. Cassette type accessories (AL, AX and SHT) cannot be installed to circuit breakers with MG.
7. It is impossible to install a combination of a cassette type accessory with lead wires drawn out and that with SLT or a combination of cassette type accessories with SLT on the same pole.
8. It is impossible to install the cassette type AL or AX to the pole to which UVT has been installed.
9. AX and SHT with lead wires drawn out for frame size from 400 to 800 A can be installed to any of the right and left poles.
10. When installing more than one AL or AX with lead wires drawn out for frame size from 400 to 800 A to one side, install the necessary number of the accessories for one piece. The lead wires from the circuit breaker vary in length depending on the installation position.
11. Install the cassette accessories for frame size from 400 to 800 A starting from the outside of the installation positions. For the installation positions, see the installation positions shown in the following table.
12. When three pieces of more of AL and AX are installed on a circuit breaker with a frame size 400 to 800 A, the AL and AX with SLT are manufactured to order.

### Installation positions of cassette type accessories for 400 to 800 A frames

Installation positions

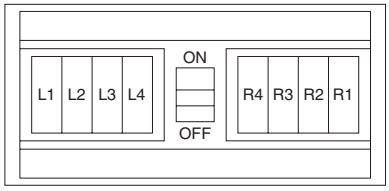


**Table 6-9-2 Installation positions of cassette type accessories**

| Frame (A) | 400 • 600 • 630 | | | | | 800 | | | | | | | |
|---|---|---|---|---|---|---|---|---|---|---|---|---|---|
| Accessory \ Installation positions | L1 | L2 | L3 | R2 | R1 | L1 | L2 | L3 | L4 | R4 | R3 | R2 | R1 |
| AL | ○ | ○ | – | – | – | ○ | ○ | ○ | – | – | – | – | – |
| AX | ○ | ○ | – | ○ | ○ | ○ | ○ | ○ | ○ | – | – | ○ (*1) | ○ |
| AL + AX | ○ | ○ | – | – | – | ○ | ○ | – | – | – | – | – | – |
| SHT | – | ○ | | ○ | | – | – | ○ | | ○ (*1) | | – | – |

* Accessories only for Earth Leakage Circuit Breakers (NV-C, S and H), Earth Leakage Alarm Breakers (NF-Z) and single-phase 3-wire circuits (NF-N and NV-N) cannot be installed to R1, R2, R3 or R4.

Note *1 It is impossible to simultaneously install AX on R2 and SHT on R3 or R4.

## Interpretation of type name

(1) Alarm switch • Auxiliary switch

AL 2 — 4 SV (or SW) L S B

| Kind of accessory | |
|---|---|
| AL | Alarm switch |
| AX | Auxiliary switch |

| Number of accessories to be installed |
|---|
| When installing more than one AL or AX with SLT, specify the number. |

| Ampere frame | |
|---|---|
| 05 | For 30 to 250A frames |
| 4 | For 400 to 800A frames |

| Installation position | |
|---|---|
| R | Right pole, 2 or 3 poles |
| RF | Right pole, 4 poles |
| L | Left pole |
| Blank | Right and left |

| Kind of switch | |
|---|---|
| Blank | Standard |
| B | Minute load |

With SLT (vertical lead wire terminal block)
(with lead wires drawn out unless otherwise specified)

(2) Shunt tripping device
Undervoltage tripping device

SHT A1 — 1 SV (or SW) R S

| Kind of accessory | |
|---|---|
| SHT | Shunt tripping device |
| UVTN (*1) | Undervoltage tripping device |
| UVTS (*2) | |

| Voltage (SHT) | |
|---|---|
| A240 | AC100-240V |
| A440 | AC380-440V |
| A480 | AC380-480V |
| A550 | AC380-550V |
| D100 | DC100V |
| D125 | DC100-125V |
| Blank | AC100-450/DC100-200V |

| Ampere frame | |
|---|---|
| 05 | For 30 to 250A frames |
| 4 | For 400•600•630A frames<br>For 800A frames (3P) |
| 8 | For 800A frames (4P) |

| Installation position | |
|---|---|
| R | Right pole, 2 or 3 poles |
| RF | Right pole, 4 poles |
| L | Left pole |
| Blank | Right and left |

With SLT (vertical lead wire terminal block)
(with lead wires drawn out unless otherwise specified)

| Voltage (UVTN or UVTS) | |
|---|---|
| AD130 | Switching between 100 to 130 V AC and 100 to 130 V DC |
| A250 | AC200-250V |
| A480 | AC380-480V |

Notes *1 The circuit breaker cannot be reset if voltage is not applied to UVTN. (Non-reset type UVT)
*2 The circuit breaker can be reset even if voltage is not applied to UVTS. (Reset type UVT)

# 6. Shunt Trip (SHT)

## ■Coil ratings (standard)

**Table 6-10-1**

| Model | Provision of coil burnout preventing switch | Voltage (V) | Input (VA) (*1) AC | Input (VA) (*1) DC | Operating time (*2) (ms) |
|---|---|---|---|---|---|
| NF50-SVFU<br>NV50-SVFU | Provided | AC100-240<br>380-440<br>DC100 | 120 | 60 | 15 or less |
| NF32-SV, NF63-CV/SV/HV, NF125-SGV/LGV/HGV<br>NF160-SGV/LGV/HGV, NF125-CV/SV/HV/SEV/HEV/RGV/UV<br>NF250-CV/SV/HV/SEV/HEV/RGV/UV<br>NF250-SGV/LGV/HGV<br>NV32-SV, NV63-CV/SV/HV<br>NV125-CV/SV/HV/SEV/HEV, NV250-CV/SV/HV/SEV/HEV<br>NF100-CVFU, NF125-SVU/HVU, NF250-SVU/HVU<br>NV100-CVFU, NV125-SVU/HVU, NV250-SVU/HVU | | AC100-240<br>380-550<br>DC100-125 | | 50 | |
| NF225-CWU | | AC100-240<br>380-480<br>DC100-125 | | 60 | |
| NF400-CW/SW/SEW/HEW/REW/UEW<br>NF630-CW/SW/SEW/HEW/REW<br>NF800-CEW/SDW/SEW/HEW/REW/UEW<br>NV400-CW/SW/SEW/HEW/REW<br>NV630-CW/SW/SEW/HEW<br>NV800-SEW/HEW, NF-SKW, NF-SLW | | Compatible with<br>100 to 450 V AC and<br>100 to 200 V DC | 100V 20<br>200V 50 | 100V 10 | 5-15 |
| | | | 380V 120<br>450V 170 | 200V 35 | |
| NF1000-SEW, NF1250-SEW/SDW<br>NF1600-SEW/SDW | | AC100-120<br>200-240<br>380-450<br>DC100 | 200 | 70 | 7-15 |
| | | | 300 | 100 | 15-25 |

Notes *1 Ensure that the voltage of the operating power supply for SHT is not dropped below the allowable operating voltage (70% of the rated minimum voltage value) by the input power.
*2 The operating time is the time from when the rated voltage is applied to the shunt tripping device until the main contact of the circuit breaker starts opening.
Remark: 1. The accessory is usable at 50 Hz and 60 Hz.

## ■Coil ratings (list of available special voltage coils)

**Table 6-10-2**

| Model | VAC 24 | VAC 25-27 | VAC 24-48 | VAC 48 | VAC 50-55 | VAC 60 | VAC 440-480 | VAC 380-550 | VAC 440-550 | VAC 500-550 | VDC 12 | VDC 24 | VDC 24-36 | VDC 36 | VDC 36-48 | VDC 48 | VDC 60 | VDC 110 | VDC 125 | VDC 220 | VDC 200-250 | VDC 220-250 | Compatible with AC/DC 24-48 |
|---|---|---|---|---|---|---|---|---|---|---|---|---|---|---|---|---|---|---|---|---|---|---|---|
| NF32-SV, NF63-CV/SV/HV<br>NF125-CV/SV/HV/SEV/HEV/RGV/UV<br>NF125-SGV/LGV/HGV, F160-SGV/LGV/HGV<br>NF250-CV/SV/HV/SEV/HEV/RGV/UV<br>NF250-SGV/LGV/HGV<br>NV32-SV, NV63-CV/SV/HV<br>NV125-CV/SV/HV/SEV/HEV<br>NV250-CV/SV/HV/SEV/HEV<br>NF100-CVFU, NF125-SVU/HVU, NF250-SVU/HVU<br>NV100-CVFU, NV125-SVU/HVU, NV250-SVU/HVU | – | – | ○ | – | – | – | – | – | – | – | ○ | – | ○ | – | ○ | – | – | – | – | – | ○ | – | – |
| NF225-CWU | – | – | ○ | – | – | ○ | – | – | – | – | ○ | – | ○ | – | ○ | – | ○ | – | – | – | ○ | – | – |
| NF400-CW/SW/SEW/HEW/REW/UEW<br>NF630-CW/SW/SEW/HEW/REW<br>NF800-CEW/SDW/SEW/HEW/REW/UEW<br>NV400-CW/SW/SEW/HEW/REW<br>NV630-CW/SW/SEW/HEW<br>NV800-SEW/HEW, NF-SKW, NF-SLW | – | – | – | – | – | – | – | ○ | – | – | ○ | – | – | – | – | – | – | – | – | – | – | – | ○ |
| NF1000-SEW, NF1250-SEW/SDW<br>NF1600-SEW/SDW | ○ | – | – | ○ | – | – | ○ | – | – | ○ | ○ | ○ | – | ○ | – | ○ | – | ○ | ○ | – | – | – | – |

# 7. Undervoltage Trip (UVT)

## (1) Specifications for UVT and coil ratings

**Table 6-11**

| Model | Specification | | Coil ratings | | | |
|---|---|---|---|---|---|---|
| | Reset type | Non-reset type | Voltage (V) | | Input (VA) | Operating time (*2) (ms) |
| | | | Standard voltage | Special voltage (*1) | | |
| NF50-SVFU<br>NV50-SVFU | – | ○ | AC/DC100-130V<br>AC200-250V<br>AC380-480V | AC/DC24V<br>AC/DC48V | 5 | 30 or less |
| NF32-SV, NF63-CV/SV/HV/HRV<br>NF125-CV/SV/HV/RGV/SEV/HEV/UV<br>NF125-SGV/LGV/HGV, NF160-SGV/LGV/HGV<br>NF250-CV/SV/HV/RGV/SEV/HEV/UV<br>NF250-SGV/LGV/HGV<br>NV32-SV, NV63-CV/SV/HV<br>NV125-CV/SV/HV/SEV/HEV<br>NV250-CV/SV/HV/SEV/HEV<br>NF100-CVFU, NF125-SVU/HVU, NF250-SVU/HVU<br>NV100-CVFU, NV125-SVU/HVU, NV250-SVU/HVU | ○ | ○ | | AC/DC24V<br>AC/DC48V<br>AC500-600V | | |
| NF400-CW/SW/SEW/HEW/REW/UEW<br>NF630-CW/SW/SEW/HEW/REW<br>NF800-CEW/SDW/SEW/HEW/REW/UEW<br>NV400-CW/SW/SEW/HEW/REW<br>NV630-CW/SW/SEW/HEW<br>NV800-SEW/HEW | ○ (*4) | ○ (*5) | (*3)<br>Switching between 100 to 110 and 120 to 130 AC<br>Switching between 200 to 220 and 230 to 250 AC<br>Switching between 380 to 415 and 440 to 480 AC<br>Switching between 100 and 110 DC | (*3)<br>Switching between 24/48 AC<br>Switching between 500 to 550/600 AC<br>Switching between 24/48DC<br>Switching between 110/125DC | 5 | 5-30 |
| NF1000-SEW, NF1250-SEW<br>NF1600-SEW | ○ | ○ | | | | 5-35 |
| NF-SKW/SLW | ○ (*4) | – | | | | 5-30 |
| NF225-CWU | – | ○ | | Switching between (*3) 24/48 AC<br>Switching between 24/48DC<br>Switching between 110/125DC | | 30 or less |

Notes *1 Some special voltage models vary in voltage range.
*2 The operating time is the time from when the undervoltage tripping device is set to the no-voltage state until the main contact starts opening.
*3 The accessory is usable at 50 Hz and 60 Hz.
*4 If UVT is turned on without excitation, the circuit breaker instantaneously opens and immediately trips.
*5 Only for installation on the left pole

## (2) Reset type and non-reset type UVT

### ■Reset type (Refer to Table 6-12.)

The reset type UVT has a structure which does not trip a circuit breaker even if the UVT coil is not excited when the circuit breaker handle is in the OFF or reset position. Therefore, it keeps the circuit breaker in the reset state even if the coil is not excited when the breaker is reset electrically.

When the coil in the unexcited state is turned on, the circuit breaker is normally tripped. However, the major contacts of some models of circuit breakers may instantaneously close, or, on circuit breakers with AX, the AX switches may instantaneously change over. For electrical interlock, use a non-reset type UVT.

### ■Non-reset type (Refer to Table 6-12.)

When the UVT coil is not excited, the circuit breaker cannot be set to the off state even if the circuit breaker is tried to be reset from the tripped state. When the coil exciting voltage restores to the reference voltage or more, the circuit breaker can be reset to the off state.

## (3) Time delay UVT

- This type of UVT has a time delay in operation.
- It can prevent operation upon occurrence of instantaneous power failure.

**Table 6-12**

| UVT module type name | Time delay | Voltage (V) | |
|---|---|---|---|
| | | Standard voltage | Special voltage |
| U-05W | Switching among 0.1, 0.3 and 0.5 s | AC24/48<br>AC100–120/200–240/380–450<br>AC220–250/380–450/460–550<br>(Compatible with 50 Hz and 60 Hz)<br>DC100–110 | AC380–450/460–550/600–690<br>(Compatible with 50 Hz and 60 Hz)<br>DC24/48 |
| U-30W | Switching among 0.5, 1 and 3 s | AC100–120/200–240/380–450<br>AC220–250/380–450/460–550<br>(Compatible with 50 Hz and 60 Hz) | – |

## (4) Structure of UVT

The UVT mechanical unit is installed in a circuit breaker, and the UVT voltage module is installed on the outside of the circuit breaker. When the voltage drops, the UVT voltage module detects the voltage drop, and the UVT mechanical unit trips the circuit breaker.

The UVT voltage module has a vertical lead wire terminal block and is normally installed on the body. The external module will be manufactured to order.

●Outline drawing

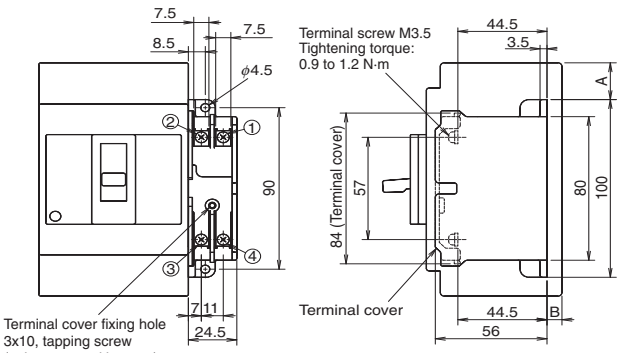


Fig. 1

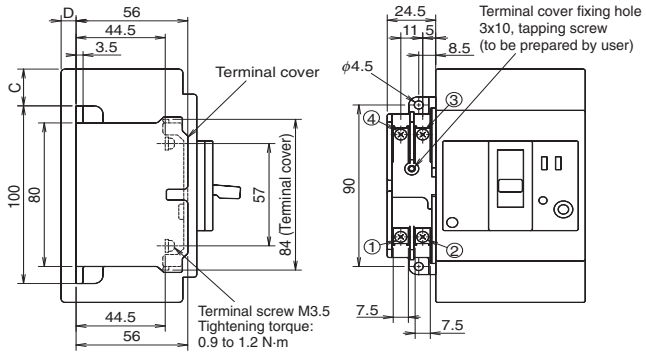


Fig. 2

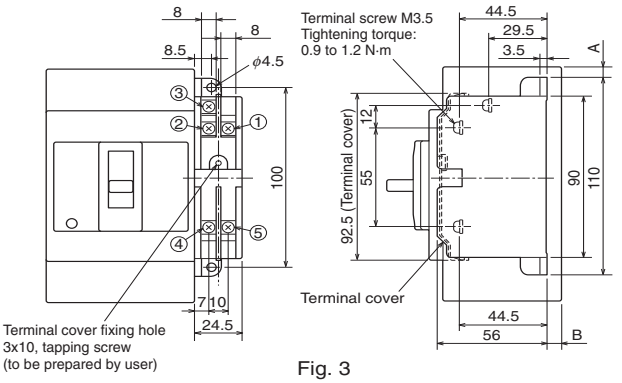


Fig. 3

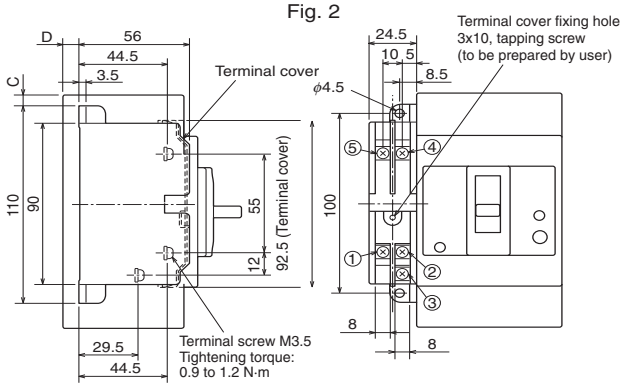


Fig. 4

●Examples of connection

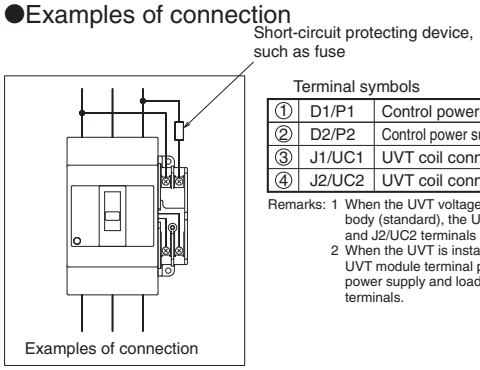


Terminal symbols

| | | |
|---|---|---|
| ① | D1/P1 | Control power supply terminal (COM) |
| ② | D2/P2 | Control power supply terminal (rated voltage) |
| ③ | J1/UC1 | UVT coil connecting terminal |
| ④ | J2/UC2 | UVT coil connecting terminal |

Remarks: 1 When the UVT voltage module is installed on the body (standard), the UVT is supplied with J1/UC1 and J2/UC2 terminals connected with the UVT coil.
2 When the UVT is installed on the left pole side, the UVT module terminal positions are reversed (on the power supply and load sides). Carefully connect the terminals.

Fig. 5

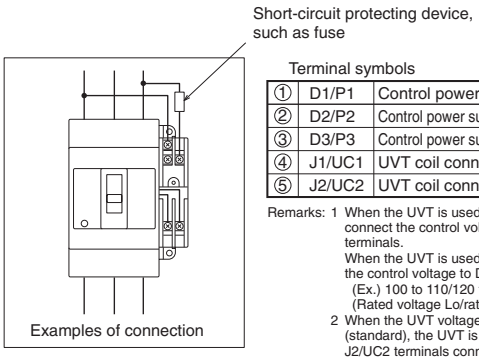


Terminal symbols

| | | |
|---|---|---|
| ① | D1/P1 | Control power supply terminal (COM) |
| ② | D2/P2 | Control power supply terminal (rated voltage Lo) |
| ③ | D3/P3 | Control power supply terminal (rated voltage Hi) |
| ④ | J1/UC1 | UVT coil connecting terminal |
| ⑤ | J2/UC2 | UVT coil connecting terminal |

Remarks: 1 When the UVT is used at the rated voltage Lo, connect the control voltage to D1/P1 and D2/P2 terminals.
When the UVT is used at the rated voltage Hi, connect the control voltage to D1/P1 and D3/P3 terminals.
(Ex.) 100 to 110/120 to 130 V AC
(Rated voltage Lo/rated voltage Hi)
2 When the UVT voltage module is installed on the body (standard), the UVT is supplied with J1/UC1 and J2/UC2 terminals connected with the UVT coil.
3 When the UVT is installed on the left pole side, the UVT module terminal positions are reversed (on the power supply and load sides). Carefully connect the terminals.

Fig. 6

### Table 6-13 Installation on right pole side

| Model | Reference drawing | Variable dimensions | |
|---|---|---|---|
| | | A | B |
| NF50-SVFU | Fig. 1 Fig. 5 | 11 | 7.5 |
| NF32-SV, NF63-CV/SV/HV | | 20.5 | 7.5 |
| NF100-CVFU | | 20.5 | 7.5 |
| NF125-CV/SV/HV | | 20.5 | 7.5 |
| NF125-SVU/HVU | | 41.5 | 7.5 |
| NF125-UV | | 81.5 | 7.5 |
| NF125-SEV/HEV/RGV, NF250-CV/SV/HV/RGV/SEV/HEV<br>NF125-SGV/LGV/HGV, NF160-SGV/LGV/HGV<br>NF250-SGV/LGV/HGV | | 38 | 7.5 |
| NF250-SVU/HVU | | 48 | 7.5 |
| NF250-UV | | 113 | 7.5 |
| NF225-CWU | Fig. 3 Fig. 6 | 25.5 | 7.5 |
| NF400-CW/SW/SEW/HEW/REW<br>NF630-CW/SW/SEW/HEW/REW, NF-SKW | | 67.5 | 41.5 |
| NF400-UEW(3P) | | 107.5 | 138.5 |
| NF800-CEW/SDW/SEW/HEW/REW, NF-SLW | | 76.5 | 41.5 |
| NF400-UEW(4P), NF800-UEW | | 123.5 | 138.5 |
| NF1000-SEW, NF1250-SEW, NF-1600-SEW | | 161 | 63 |

### Table 6-14 Installation on left pole side

| Model | Reference drawing | Variable dimensions | |
|---|---|---|---|
| | | C | D |
| NV125-CV/SV/HV | Fig. 2 | 20.5 | 7.5 |
| NV125-SEV/HEV, NV250-CV/SV/HV/SEV/HEV | Fig. 5 | 38 | 7.5 |
| NF400-CW/SW/SEW/HEW/REW<br>NF630-CW/SW/SEW/HEW/REW<br>NV400-CW/SW/SEW/HEW/REW<br>NV630-CW/SW/SEW/HEW<br>NF400-ZCW/ZSW/ZEW<br>NF-SKW | Fig. 4 Fig. 6 | 67.5 | 41.5 |
| NF400-UEW(3P) | | 107.5 | 138.5 |
| NF800-CEW/SDW/SEW/HEW/REW<br>NV800-SEW/HEW, NF-SLW | | 76.5 | 41.5 |
| NF400-UEW(4P), NF800-UEW | | 123.5 | 138.5 |

# 8. Lead Wire Drawing

## ■Lead wire lateral drawing … Available to all models

Note *1 Except for BH, BH-P, BH-S, BH-PS, BH-D6, BH-D10, BH-DN, BV-D, BV-DN and KB-D.

## ■Lead wires drawing to load

**Table 6-15**

| Model applicable to lead wire drawing to load | (only front connection type) |
|---|---|
| NF30-CS | |

## ■Specifications for lead wires

**Table 6-16**

| Applicable model | Kind of lead wire | Lead wire thickness | Lead wire length | Example of ring mark |
|---|---|---|---|---|
| NF30-CS | Heat-resistant wire | 0.4mm² | 450mm | 98/ALa (Red), 96/ALb (Blue) 95/ALc (Gray), 14/AXa (Brown) 12/AXb (Black), 11/AXc (White) C1/S1 (Red), C2/S2 (Red) J1/UC1 (White), J2/UC2 (White) A terminal symbol is indicated on each lead wire with a ring mark. |
| 1000A frame or above | | 0.75mm² | | |
| 30 to 800A frames except above models | | 0.5mm² | | |

Remark: 1. Although the following models are applicable to lead wires drawn laterally, they are normally applicable to installation in close contact with the circuit breaker side faces. (The circuit breaker side faces have grooves.)

NF32-SV, NF63-CV/SV/HV~NF250-CV/SV/HV/UV
NF125-SEV/HEV, NF250-SEV/HEV, NF125-RGV
NF250-RGV, NF125-SGV/LGV/HGV~NF250-SGV/LGV/HGV
NV32-SV, NV63-CV/SV/HV~NV250-CV/SV/HV
NV125-SEV/HEV, NV250-SEV/HEV
NF50-SVFU, NF100-CVFU, NF125-SVU/HVU, NF250-SVU/HVU, NF225-CWU
NV100-CVFU, NV125-SVU/HVU
NV250-SVU/HVU

(When a 4-pole model among the above models has accessories installed on the right pole side, the lead wires are 400 mm long.)

# 9. Lead Wire Terminal Block

## (1) Vertical lead wire terminal block (SLT)

The lead wire terminal blocks for plug-in terminal blocks are available (P-LT). The drilling size of these terminal blocks differs from the standard size. Consult us for details.
For a flush plate type circuit breaker, a terminal block will be installed on the circuit breaker rear face. (Specify as FP-LT.)

Note *1 When the circuit breaker body is equipped with internal accessories and electrical operation device of motor-driven type (2) or spring charge type (2), the circuit breaker is normally provided with a lead wire terminal block.

## ■MCCB

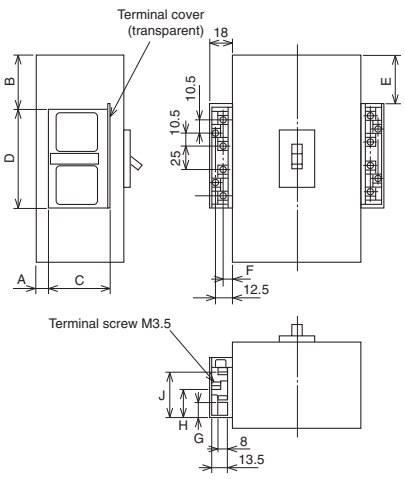


**Table 6-17-1 Table of variable dimensions**

| Model | A | B | C | D | E | F | G | H | J |
|---|---|---|---|---|---|---|---|---|---|
| NF30-CS (*1) | 4 | 4.5 | 44.5 | 86.5 | 4.5 | 7 | 10 | 22 | 34 |
| NF32-SV, NF63-CV/SV/HV | 7 | 26.5 | 54 | 86.5 | 26.5 | 7 | 14 | 26 | 38 |
| NF125-CV/SV/HV | 7 | 26.5 | 54 | 86.5 | 26.5 | 7 | 14 | 26 | 38 |
| NF125-UV | 7 | 87.5 | 54 | 86.5 | 87.5 | 7 | 14 | 26 | 38 |
| NF250-UV | 7 | 119 | 54 | 86.5 | 119 | 7 | 14 | 26 | 38 |
| NF125-SEV/HEV/RGV, NF250-CV/SV/HV/SEV/HEV/RGV NF125-SGV/LGV/HGV, NF160-SGV/LGV/HGV NF250-SGV/LGV/HGV | 7 | 44 | 54 | 86.5 | 44 | 7 | 14 | 26 | 38 |
| NF50-SVFU | 7 | 27.5 | 54 | 86.5 | 27.5 | 7 | 14 | 26 | 38 |
| NF100-CVFU | 7 | 28.5 | 54 | 86.5 | 28.5 | 7 | 14 | 26 | 38 |
| NF125-SVU/HVU | 7 | 47.5 | 54 | 86.5 | 47.5 | 7 | 14 | 26 | 38 |
| NF225-CWU | 7 | 37 | 54 | 86.5 | 37 | 7 | 14 | 26 | 38 |
| NF400-CW/SW/SEW/HEW/REW, NF-SKW NF630-CW/SW/SEW/HEW/REW | 41 | 79.5 | 54 | 86.5 | 79.5 | 7 | 14 | 26 | 38 |
| NF800-CEW/SDW/SEW/HEW/REW, NF-SLW | | 88.5 | 54 | 86.5 | 88.5 | 7 | 14 | 26 | 38 |
| NF1000-SEW, NF1250-SEW, NF1600-SEW | 62.5 | 173 | 54 | 86.5 | 173 | 7 | 14 | 26 | 38 |
| NF400-UEW(3P) (*1) | 138 | 119.5 | 54 | 86.5 | 119.5 | 7 | 14 | 26 | 38 |
| NF400-UEW(4P), NF800-UEW (*1) | | 135.5 | 54 | 86.5 | 135.5 | 7 | 14 | 26 | 38 |

Note *1 The terminal positions are different from those shown in the left figure. Consult us for details.
Remark: 1. Terminal screw tightening torque: M3.5 … 0.9 to 1.2 N·m

## ■ELCB

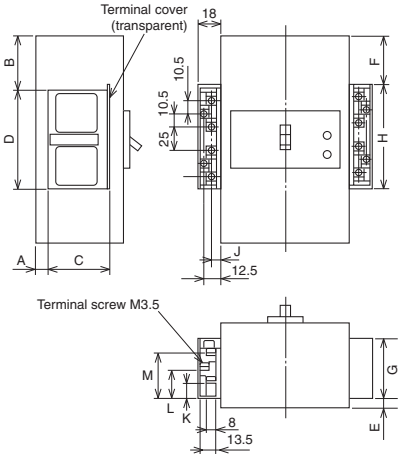


**Table 6-17-2 Table of variable dimensions**

| Model | A | B | C | D | E | F | G | H | J | K | L | M |
|---|---|---|---|---|---|---|---|---|---|---|---|---|
| NV50-SVFU | 16.5 | 17 | 54 | 86.5 | 16.5 | 17 | 54 | 86.5 | 6 | 10.5 | 22.5 | 34.5 |
| NV32-SV, NV63-CV/SV/HV | 7 | 26.5 | 54 | 86.5 | 7 | 26.5 | 54 | 86.5 | 7 | 14 | 26 | 38 |
| NV100-CVFU | 7 | 36.5 | 54 | 86.5 | 7 | 36.5 | 54 | 86.5 | 7 | 14 | 26 | 38 |
| NV125-CV/SV/HV | 7 | 26.5 | 54 | 86.5 | 7 | 26.5 | 54 | 86.5 | 7 | 14 | 26 | 38 |
| NV125-SVU/HVU | 7 | 47.5 | 54 | 86.5 | 7 | 47.5 | 54 | 86.5 | 7 | 14 | 26 | 38 |
| NV125-SEV/HEV, NV250-CV/SV/HV/SEV/HEV | 7 | 44 | 54 | 86.5 | 7 | 44 | 54 | 86.5 | 7 | 14 | 26 | 38 |
| NV250-SVU/HVU | 7 | 54 | 54 | 86.5 | 7 | 54 | 54 | 86.5 | 7 | 14 | 26 | 38 |
| NV400-CW/SW/SEW/HEW/REW<br>NV630-CW/SW/SEW/HEW, NV-SKW | 41 | 79.5 | 54 | 86.5 | 26.5 | 79.5 | 52 | 92 | 7 | 14 | 26 | 38 |
| NV800-SEW/HEW (*1) | 41 | 88.5 | 54 | 86.5 | 26.5 | 88.5 | 52 | 92 | 7 | 14 | 26 | 38 |

Notes *1 The terminal positions are different from those shown in the left figure. Consult us for details.
Remarks: 1. Terminal screw tightening torque: M3.5 … 0.9 to 1.2 N·m
2. The lead wire terminal block for TBL is provided on the right pole side. However, the lead wire terminal blocks for TBL of NV30-FA and NV50-FA are provided on the left pole side.

## ■14-terminal SLT

SLT for installing three or more internal accessories on the left pole side

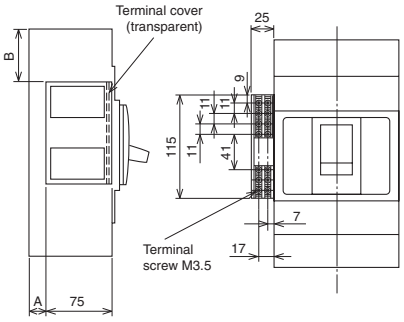


**Table 6-17-3**

| Model | | A | B |
|---|---|---|---|
| MCCB | ELCB | | |
| NF400-CW/SW/SEW<br>NF400-HEW/REW<br>NF630-CW/SW/SEW<br>NF630-HEW/REW | NV400-CW/SW/SEW<br>NV400-HEW/REW<br>NV630-CW/SW/SEW/HEW | 20 | 60 |
| NF400-UEW(3P) | – | 117 | 100 |
| NF800-CEW/SDW/SEW<br>NF800-HEW/REW | NV800-SEW/HEW | 20 | 69 |
| NF400-UEW(4P), NF800-UEW | – | 117 | 116 |
| NF1000-SEW, NF1250-SEW<br>NF1600-SEW | – | 35 | 154 |

Remark: 1. The terminal positions are different from those shown in the left figure. Consult us for details.

# 10. Test Button Module (TBM)

- The test button is kept pressed while control input voltage is applied to the button. (When ELCB of time delay type is used, apply voltage for 2 seconds or more.)
- The test button module is supplied with voltage through a circuit isolated from the main circuit. It can share the control sequence with SHT of a molded case circuit breaker.
- Unlike TBL, the test button modules can be connected in parallel.
- The module is normally provided with a vertical lead wire terminal block (SLT).

**Table 6-18**

| | | |
|---|---|---|
| Model | NV32-SV<br>NV63-CV/SV/HV<br>NV125-CV/SV/HV<br>NV125-SEV/HEV<br>NV250-CV/SV/HV/SEV/HEV<br>NV50-SVFU<br>NV100-CVFU<br>NV125-SVU/HVU<br>NV250-SVU/HVU | NV400-CW/SW<br>NV630-CW/SW<br>NV400-SEW~NV800-SEW<br>NV400-HEW~NV800-HEW<br>NV400-REW |
| Control input Rated voltage (V) | Compatible with 100 to 240 AC and 100 to 240 DC (DC24) (*1) | |
| Control input (VA) | 1.5 VA or less | 1 VA or less |
| Reference drawing | Fig. 1 | Fig. 2 |

Note *1 Unless otherwise specified, the module will be manufactured for 100 to 240 V AC and 100 to 240 V DC.
In the case of 24 V DC, specify the voltage.
Remark: 1. The length of the lead wires to be connected to TBM1 and 2 shall be 100 m or more.

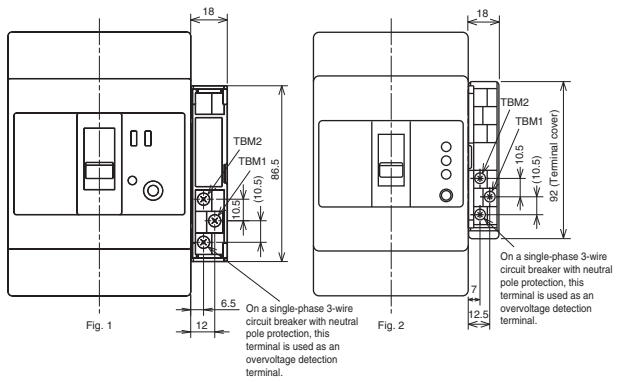


For a flush plate type with 250A frame or below, the external dimensions of the flush plate type differ from the standard dimensions.

# 11. Pre-Alarm Module (PAL)

The pre-alarm is a function to output an alarm when the load current exceeds the preset current value. It is helpful in securing continuous power supply and preventive maintenance.
It can be fitted to electronic circuit breakers with a frame size from 125 to 1600 A.

## ■ 125 and 250A frames

### ● Pre-alarm module (PAL module)

The standard modules have SLT. Other internal accessories cannot be installed on the right pole side.
A control power supply (compatible with 100 to 240 V AC and DC) is necessary. The control power supply voltage range is 85 to 246 V AC/DC, and the required volt-ampere is 5 VA.

**Table 6-19-1**

| Model | Switching capacity Contact output (1a) | Resetting method |
|---|---|---|
| NF125-SEV NF125-HEV NF250-SEV NF250-HEV<br>NV125-SEV NV125-HEV NV250-SEV NV250-HEV | AC125V 2A DC 30V 2A<br>AC250V 2A DC100V 0.3A | Press the reset button, or turn off the control power supply. |

Pre-alarm characteristics

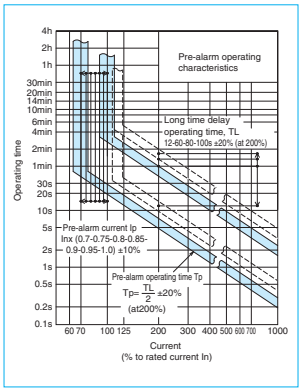


Dimensional drawing of pre-alarm module

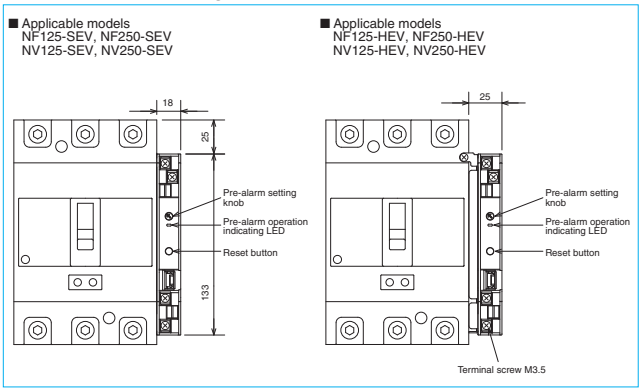


Terminal arrangement

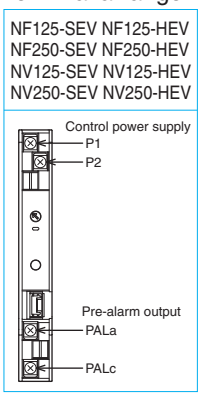


### ● Pre-alarm LED indication

When the load current exceeds the preset current value, the LED lamp on the pre-alarm module front panel starts blinking. When the pre-alarm output is given, the lamp stops blinking and turns on.

### ● Pre-alarm current setting (IP setting)

The pre-alarm current can be set to the rated current In × 0.7, 0.75, 0.8, 0.85, 0.9, 0.95 or 1.0 with the knob on the pre-alarm module front panel.

## ■ 400 A frame or above

### ● Solid state relay (SSR) output (PAL lead)

The lead wires are drawn out. On the right pole side, only internal accessories with lead wires drawn out can be installed. A control power supply is unnecessary.

**Table 6-19-2**

| Model | Switching capacity Solid state relay (SSR) – Non-contact output | Resetting method |
|---|---|---|
| NF400-SEW NF400-HEW NF400-REW NF400-UEW NF630-SEW NF630-HEW NF630-REW<br>NF800-CEW NF800-SEW NF800-HEW NF800-REW NF800-UEW<br>NF1000-SEW NF1250-SEW NF1600-SEW<br>NV400-SEW NV400-HEW NV400-REW NV630-SEW NV630-HEW NV800-SEW NV800-HEW | AC/DC24 to 240V 20mA | When the load current becomes lower than the preset current value, the alarm is reset. |

### ● Pre-alarm module (PAL module)

The standard modules have SLT. Other internal accessories cannot be installed on the right pole side.
A control power supply (compatible with 100 to 200 V AC) is necessary except for NF-ZEW. The control power supply voltage range is 80 to 242 V AC, and the required volt-ampere is 10 VA.

**Table 6-19-3**

| Model | Switching capacity Contact output (1a) | Resetting method |
|---|---|---|
| NF400-SEW NF400-HEW NF400-REW NF400-UEW NF630-SEW NF630-HEW NF630-REW<br>NF800-CEW NF800-SEW NF800-HEW NF800-REW NF800-UEW<br>NF1000-SEW NF1250-SEW NF1600-SEW<br>NV400-SEW NV400-HEW NV400-REW NV630-SEW NV630-HEW NV800-SEW NV800-HEW | 100 V AC or 200 V AC, 2 A | Press the reset button, or turn off the control power supply. |

Pre-alarm characteristics

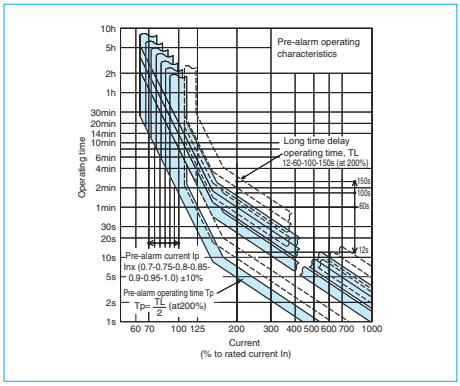


Detailed drawing of pre-alarm module

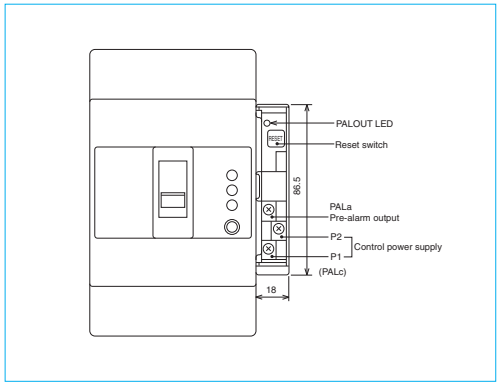


Pre-alarm module output rating

| AC | | |
|---|---|---|
| Voltage V | Current (A) | |
| | Resistive load | Inductive load |
| 200 | 3 | 2 |
| 100 | 3 | 2 |

A control power supply (compatible with 100 to 200 V AC) is necessary. For the wiring method, see the following figure. (The control power supply voltage range is 80 to 242 V AC.) The required volt-ampere is 10 VA.

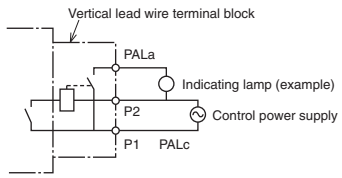


### ● Pre-alarm LED display (standard device)

When the load current exceeds the preset current value, the LED lamp on the circuit breaker front panel starts blinking. When the pre-alarm output is given, the lamp stops blinking and turns on.

### ● Pre-alarm current setting (IP setting)

The pre-alarm current can be set to the rated current In × 0.7, 0.75, 0.8, 0.85, 0.9, 0.95 or 1.0 with the knob on the circuit breaker front panel.

# 1. F-Type Operating Handle

Operating handle of breaker mount type to be installed to circuit breaker body

## ●Appearance (Color: Munsell N1.5)

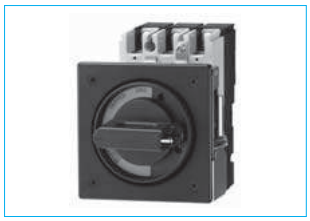

- The handle provides an isolating function in combination with the circuit breaker body (except F10SW and above).
- It has a safety device which prevents the circuit breaker turning on while the door is open.
- It can be locked in the OFF position. (Up to 3 commercially available padlocks (35 mm and 40 mm) can be fitted. A type which can be locked in the ON or OFF position can be manufactured. Specify the type if required.) On circuit breakers with a frame size of 1000A or above, the handle can be locked in the ON or OFF position. (If it is necessary to lock the handle only in the OFF position, specify so.)
- It is in protection class IP54 (IEC 60529). (For circuit breakers with a frame size of 1000A or above, the protection class (IEC 60529) is IP3X (IP5X when dust-proof packing is provided).

### Dust-proof packing (optional)

| Type nema | Operating handle type name | Delivery category |
|---|---|---|
| PFL | F10SW~F120UR | ● |

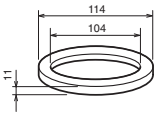


## ●Outline drawings

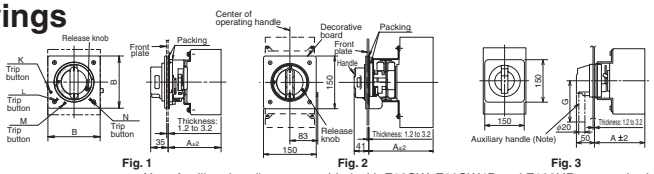


Fig. 1 Fig. 2 Fig. 3

Note Auxiliary handles are provided with F10SW, F10SW4P and F120UR as standard.

## ●Center of hinge and breaker

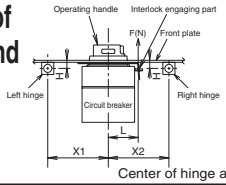


Center of hinge and circuit breaker

- The right drawing shows the relationship between the hinges and circuit breaker viewed from the load side of the circuit breaker.

| | Hinge on left side | | Hinge on right side | |
|---|---|---|---|---|
| | H | $X_1$ | H | $X_2$ |
| For 30 to 250 A frames | 0 or more | (5H+85) or more | Less than 10 | 170 or more |
| | | | 10 or more | (5H+120) or more |
| For 400 to 800 A frames | 0 or more | (5H+85) or more | 0 or more | (4H+120) or more |
| For 1000 to 1600 A frames | 0 or more | (8H+150) or more | 0 or more | (4H+120) or more |

Remarks: 1. The handle is opened and closed in the projection area of the handle and does not run over the projection area of the circuit breaker (except when the auxiliary handle is provided.)
2. When the operating handle is fitted to NV, the test button cannot be pressed easily. If necessary, use a circuit breaker with TBL or TBM. When using an Earth Leakage Alarm Breaker, use the externally resetting type (ECA-SLT RST) or automatically resetting type (ARS).

## ●Dimensional drawings of front plate drilling

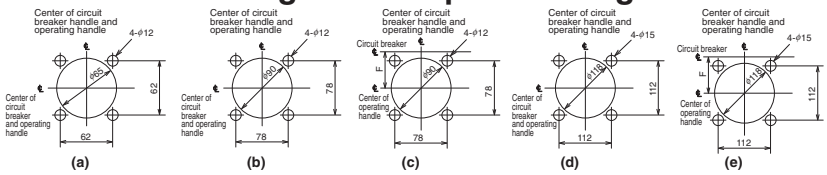


(a) (b) (c) (d) (e)

## ●Dimensional drawings of circuit breaker mounting holes

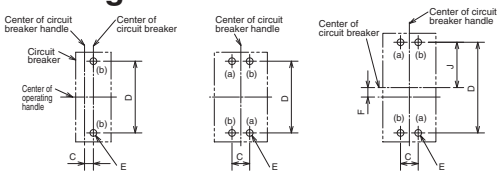


(f) (g) (h)

## ●Door lock withstand load

| | F(N) | L(mm) |
|---|---|---|
| F-05~F-2 | 500 | 50 |
| F-4~F-8 | | 68 |

### Table 6-20 Summary of dimensions

| Type name | Door opening position: OFF position | Door opening position: Reset position | Applicable model: MCCB | Number of poles | Applicable model: ELCB | Number of poles | Reference drawing: Dimensional drawing | Reference drawing: Drilling plan | | Dimensions (mm): A (*1) | B | C | D | E | F | G | J | Trip button position (*4) | Mounting screw |
|---|---|---|---|---|---|---|---|---|---|---|---|---|---|---|---|---|---|---|---|
| F-05SV2<br>F-05SVE2 | – | ○ | NF32-SV<br>NF63-CV, NF63-SV, NF63-HV | 2P | – | – | Fig. 1 | b | f | 105 | 104 | 13 | 111 | M4 screw or $\phi$5 | – | – | – | N | (a) Circuit breaker mounting screw (2 pcs.)<br>(b) Circuit breaker handle mounting screw (2 pcs.)<br>F-05SV2 F-05SVE2 F-1SV2 F-1SVE2 F-05SRUL2 F-03SVUL2 F-05SVUL2 |
| F-05SV<br>F-05SVE (*2) | – | ○ | NF32-SV<br>NF63-CV, NF63-SV, NF63-HV | 3P • 4P | NV32-SV<br>NV63-CV, NV63-SV, NV63-HV | 2P • 3P | | | g | | | 25 | | | | | | L | |
| F-1SV2, F-1SVE2 | – | ○ | NF125-CV, NF125-SV | 2P | – | – | | | f | 105 | | 15 | | | – | | – | N | |
| F-1SV<br>F-1SVE | – | ○ | NF125-CV, NF125-SV<br>NF125-HV | 3P • 4P<br>2P • 3P • 4P | NV125-CV, NV125-SV, NV125-HV | 3P • 4P | | | g | | | 30 | | | | | | L | |
| F-1UV, F-1UVE | – | ○ | NF125-UV | 2P • 3P • 4P | – | – | | c | h | | | | 172 | | 31 | | 86 | L | |
| F-2SV<br>F-2SVE | – | ○ | NF125-SEV, NF125-HEV, NF125-RV<br>NF125-SGV, NF125-LGV, NF125-HGV<br>NF160-SGV, NF160-LGV, NF160-HGV<br>NF250-SGV, NF250-LGV, NF250-HGV<br>NF250-CV, NF250-SV, NF250-HV<br>NF250-SEV, NF250-HEV, NF250-RV | 2P • 3P • 4P | NV125-SEV, NV125-HEV<br>NV250-CV, NV250-SV, NV250-HV<br>NV250-SEV, NV250-HEV | 3P • 4P | | b | f | 107 | | 35 | 126 | | – | | – | K | |
| F-2UV, V-2UVE | – | ○ | NF250-UV | 2P • 3P • 4P | – | – | | c | h | | | | 201 | | 38 | | 100.5 | K | |
| F-1SVUL | – | ○ | NF125-SVU, NF125-HVU | 3P | NV125-SVU, NV125-HVU | 3P | | c | h | 105 | | 30 | 123 | | 6 | | 61.5 | L | |
| F-2SVUL | – | ○ | NF250-SVU, NF250-HVU | 3P | NV250-SVU, NV250-HVU | 3P | | b | g | 107 | | 35 | 126 | | – | | – | K | Only the screws (b) are used for the following models. |
| F-03SVUL2 | – | ○ | NF50-SVFU | 2P | NV50-SVFU | 2P | | a | f | 105 | 80 | 9 | 82.5 | | | | | M | |
| F-03SVUL | – | ○ | | 3P | | 3P | | | g | | | 18 | | | | | | | |
| F-05SVUL2 | – | ○ | NF100-CVFU | 2P | – | – | | b | f | | 104 | 13 | 111 | | | | | N | |
| F-05SVUL | – | ○ | | 3P | NV100-CVFU | 3P | | | g | | | 25 | | | | | | L | |
| F-2SUL | – | ○ | NF225-CWU | 3P | – | – | | b | g | 107 | 104 | 35 | 126 | | | | | – | |
| F-4S<br>F-4SE | – | ○ | NF400-CW, SW, SEW, HEW, REW<br>NF630-CW, SW, SEW, HEW, REW | 2P, 3P, 4P | NV400-CW, SW, SEW, HEW, REW<br>NV630-CW, SW, SEW, HEW | 3P, 4P | Fig. 2 | d | g | 183 | – | 44 | 194 | M6 screw or $\phi$7 | – | – | – | – | (a)(b) Circuit breaker mounting screw (4 pcs.) |
| F-4U<br>F-4UE | – | ○ | NF400-UEW | 3P | – | – | | e | h | 280 | | | 234 | | 20 | | | | |
| F-8S<br>F-8SE | – | ○ | NF800-CEW, SDW, SEW<br>NF800-HEW, REW | 2P, 3P, 4P | NV800-SEW, HEW | 3P | | d | g | 183 | | 70 | 243 | | – | | | | |
| F-8U<br>F-8UE | – | ○ | NF800-UEW<br>NF400-UEW(4P) | 3P, 4P | – | – | | e | h | 280 | | | 290 | | 23.5 | | | | |
| F-4SUL | – | ○ | NF-SKW | 3P | – | 3P | | d | g | 183 | | 44 | 194 | | – | | | | |
| F-6SUL | – | ○ | NF-SLW | 3P | – | – | | | | | | 70 | 243 | | | | | | |
| F10SW (*3) | – | ○ | NF1000-SEW<br>NF1250-SEW/SDW<br>NF1600-SEW/SDW | 2P, 3P | – | – | Fig. 3 | d | g | 221 | – | 70 | 375 | M8 screw or $\phi$10 | – | 200 | | | |
| F10SW4P (*3) | | | | 4P | | | | | | | | | | | | | | | |

Notes *1 The dimensions for the front connection type are shown. On some models of the rear connection type and plug-in type, the reference surface for mounting the circuit breaker may change.
*2 For the 4-pole plug-in type, a special handle is required. Consult us for details.
*3 If a handle which can be locked only in the OFF position is required, specify so.
*4 The circuit breaker can be tripped by operating the trip button while the door is open.
*5 Do not remove the sponge packing used to secure the protection class IP51. Fit the supplied packing without fail.
*6 The handle cannot be used when the circuit breaker is installed on IEC 35-mm rails.

Remarks: 1. The handles with E in their model names are designed for emergency stop devices. Their delivery category is ●.
2. The standard handles are Reset Open Type which can open the doors only when they are reset to open. OFF Open type handles which can open the doors when they are in the OFF position can be manufactured to order.
3. A handle which can be operated and can indicate the ON and OFF positions in the same manner as the standard models even if the circuit breaker is installed horizontally can be manufactured to order.
4. F10SW and higher models do not conform to the isolation function.
5. Handles which are opened and closed in the OFF position can be opened also in the reset position.

## ●Installation procedure

For details, please refer to Operating Handle Installation Manual supplied with the product.

### ① Installation to a breaker

Install the operating handle to the circuit breaker in accordance with the following procedure.

Installation procedure

**250A frame and below**

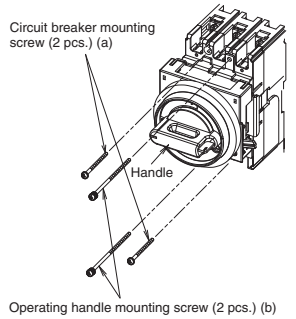


**(Installation procedure)**

① Install the circuit breaker on the panel with the two circuit breaker mounting screws through the holes (a).
② Install the operating handle with the supplied two operating handle mounting screws through the holes (b).

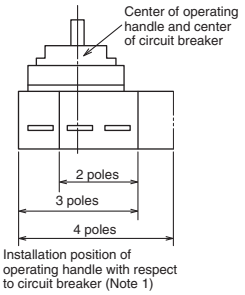


**(In the case of F-05SV2, F-1SV2, F-05SRUL2, F-05SUL2 and F-1SUL2)**

Tighten the circuit breaker and operating handle together with the supplied two operating handle mounting screws.

**400 to 1600A frames**

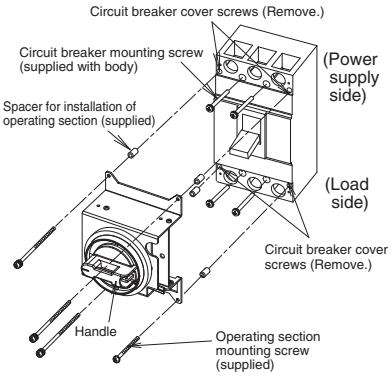


(In the case of F-4S to F-6SUL)
The operating handle mounting screws are tapping screws without washers or spring washers.

**(Installation procedure)**

① Remove the circuit breaker cover screws in the same positions as the operating handle mounting holes.
② Install the circuit breaker with the four circuit breaker mounting screws.
③ Fit the spacer(s) for installation of operating handle between the circuit breaker and operating handle. (The number of the spacers varies depending on the model.)
④ Install the operating handle with the supplied operating handle mounting screws.

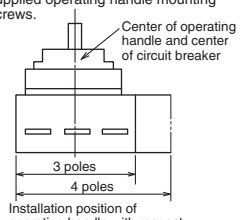


Note *1 In the case of F-05SRUL2, the center of the operating handle is the same as the center of the circuit breaker.

### ② Installation of decorative board and retaining board

Drill holes in the door according to the drilling size shown on the previous page, and tighten the decorative board and retaining board with the supplied countersunk screws. In the case of 800A frame or below, fit the supplied packing to the position shown right.

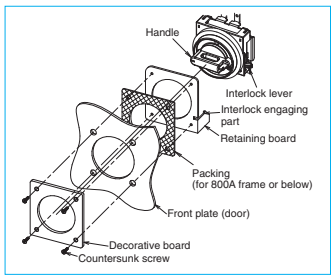


## ●Door locking mechanism

The panel door can be opened only when the operating handle is operated to open (reset). (On F-4S to F10SW, the door lock is held in the released state even if the handle is returned to OFF.) The door can be opened when the handle is in the ON position if the release knob is operated with a tool.

## ●Operation locking mechanism

Circuit breakers with a frame size of 800A or below can be locked by setting the handle in the OFF position. (Operating handles which can lock circuit breakers in the ON or OFF position can be manufactured.) Operate the locking part, and lock the handle with padlocks. Up to three padlocks can be fitted.
Lockout hasps (scissors locks) can be used.
If the circuit breaker trips even when the operating handle is locked in the ON position, also the operating handle indicates that it has tripped.

[ F-2SUL or below: Only when one 35-mm padlock (weighing 70 g or less) is used
F-4S or above: Only when one 40-mm padlock (weighing 100 g or less) is used ]

To 800A frame or below, padlocks with dimension C of 3 mm to 8 mm can be applied.
For 1000A or above, padlocks with dimension of 3 mm to 6 mm can be applied. (When using padlocks of 3 mm or less, please consult us.)

## ●Circuit breaker installation direction (except UL 489 listed circuit breakers)

We can supply circuit breakers on which the handles and their ON and OFF positions are in the same directions as on vertically installed circuit breakers even when they are installed horizontally. The door drilling size is identical. If you intend to install an operating handle on a horizontally installed circuit breaker, specify "Y" (horizontal installation with power supply on the left) or "Z" (horizontal installation with power supply on the right) at the end of the model name. (Ex.: F-4S Y)

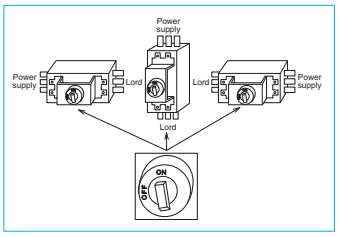


## ●Sealing of release knob

The use of an optional part, Release Protection "F-RCS", can prevent the panel door being opened by operating the release knob. (800A frame or below)

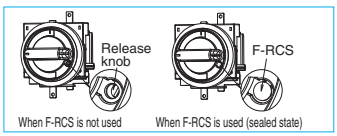


## ●Operation Lock Devices

(1) Padlock

**Padlock Dimensions**

Use commercially available padlocks. (mm)

| Applicable model | A (Nominal size) | B | C |
|---|---|---|---|
| All models | 35 | 19 | 5 |
| | 40 | 22 or 23 | 5.5 |

Dimension C: Maximum 8mm.

(2) Lockout Devices (Scissors Lock)

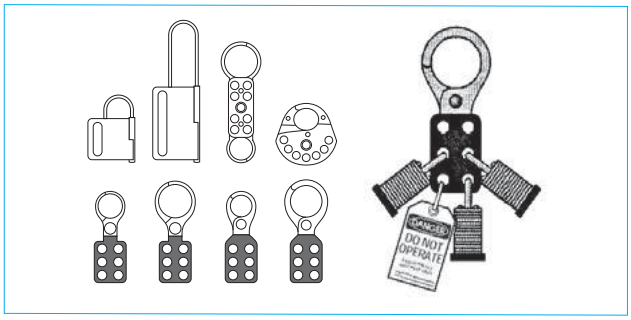


## ●How to order

For 800A frame or below, specify the following specification symbols together with the model name.

- Operation lock: LF ····· Lock in OFF position
- Operation lock: LN ····· Lock in ON or OFF position
- Door opening: DR ····· Reset to open
- Operation lock: DF ····· Open in OFF position
- Installation direction: Blank ··· Power supply upward
- Installation direction: Y ····· Power supply on left
- Operation lock: Z ····· Power supply on right

For a standard product with a frame size of 1000A or above, specify the model name. When it is required to enable the operation lock only in the OFF position, specify the model name and "only lock in OFF position."
If you intend to seal the release knob, place an order for the release protection. (Lot: 10 pcs.)

## ●Interpretation of model name

(1) For 800A frame or below

F – 1 SV UL E 2
1) 2) 3) 4) 5) 6)

1) F: Operating handle type name
2) 1: Circuit breaker group (0.5, 1, 2, 4, 6 or 8)
3) SV: Classification of circuit breaker (S, SV, H, U, UV, SR or SG)
4) UL: Blank···General product UL···UL 489 listed product
5) E: Blank···Standard E···For emergency stop
6) 2: Blank···3P or 4P 2···2P

(2) For 1000A frame or above

F 10 SW 4P
1) 2) 3) 4)

1) F: Operating handle type name
2) 4: Circuit breaker A frame (10 or 120)
3) SW: Series name
4) 4P: Number of poles (4P) * Not indicated for 3P

# 2. V-Type Operating Handle

Operating handle of door mount type consisting of operating section to be mounted on circuit breaker body and operating handle on panel door

- The handle provides an isolation function in combination with the circuit breaker body.
- Conforming to the safety regulations of EN Standard (EN 60204-1)
- Protection class (IEC 60529) IP65 as standard
- The handle can be locked only in the OFF position with up to three commercially available padlocks (35 mm or 40 mm).
- The panel door can be opened in the OFF position. In the ON and trip positions, the panel door is locked and cannot be opened. However, the door can be opened even in the ON and trip positions by operating the release part with a tool.

## ●Appearance (Color: Munsell N1.5)

## ●Outline drawings

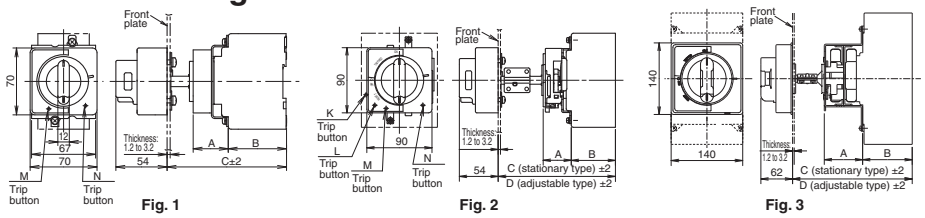


Fig. 1 Fig. 2 Fig. 3

## ●Center of hinge and breaker

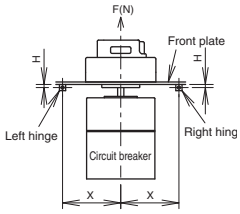


Relationship between hinges and circuit breaker viewed from load side of circuit breaker

| | H | X |
|---|---|---|
| For 30 to 250 A frames | 0 or more | 5H+100 or more |
| For 400 to 800 A frames | | 8H+150 or more |

* The above figure shows the relationship viewed from the load side.

## ●Dimensional drawings for front plate drilling

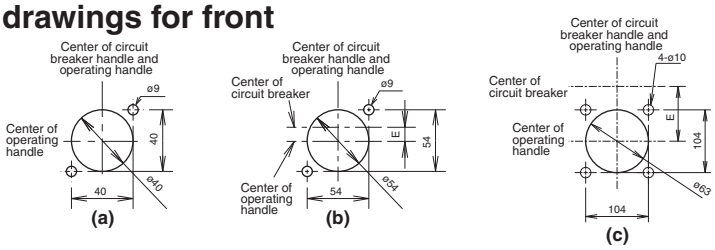


(a) (b) (c)

## ●Door lock withstand load

| | F(N) |
|---|---|
| 30 to 800A frames | 200 |

## ●Dimensional drawings of circuit breaker mounting holes

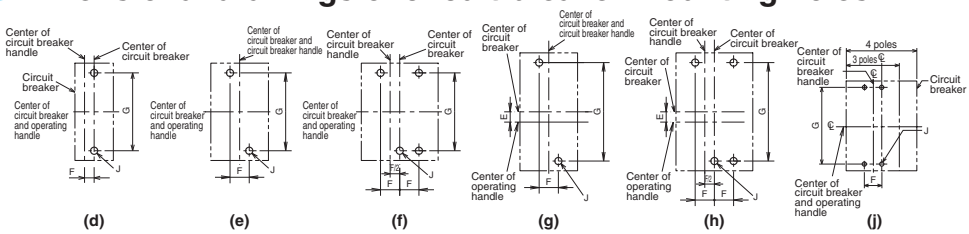


(d) (e) (f) (g) (h) (j)

### Table 6-21 Summary of dimension

| Type name: Stationary type | Type name: Adjustable type | Applicable model: MCCB | Number of poles | Applicable model: ELCB | Number of poles | Reference drawing: Dimensional drawing | Reference drawing: Drilling plan | | Dimensions (mm): A | B | C (Stationary type) | D (min) (Adjustable type(*2)) | D (max) (Adjustable type(*2)) | E | F | G | J | Trip button position (*5) |
|---|---|---|---|---|---|---|---|---|---|---|---|---|---|---|---|---|---|---|
| V-05SV2<br>V-05SVE2 | (*1) Adjusting unit V-AD3S is mounted on stationary type. | NF32-SV<br>NF63-CV, NF63-SV, NF63-HV | 2P | – | – | Fig. 2 | b | d | 39 | 61 | 125 | – | – | – | 12.5 | 111 | M4 screw or ϕ5 | N |
| V-05SV<br>V-05SVE | | NF32-SV<br>NF63-CV, NF63-SV, NF63-HV | 3P | NV32-SV<br>NV63-CV, NV63-SV, NV63-HV | 2P, 3P | | | e | | | | 162 | 300 | | 25 | | | L |
| | | | 4P | – | – | | | | | | | | | | | | | |
| V-1SV2, V-1SVE2 | | NF125-CV, NF125-SV | 2P | – | – | | | d | | | | – | – | – | 15 | | | N |
| V-1SV<br>V-1SVE | | NF125-CV, NF125-SV | 3P | NV125-CV, NV125-SV, NV125-HV | 3P | | | e | | | | 162 | 300 | – | 30 | | | L |
| | | | 4P | | 4P | | | f | | | | | | | | | | |
| | | NF125-HV | 2P, 3P | – | – | | | e | | | | | | | | | | |
| | | | 4P | | | | | f | | | | | | | | | | |
| V-1UV<br>V-1UVE | | NF125-UV | 2P, 3P | – | – | | | g | 39 | | | | | 30.5 | | 172 | | |
| | | | 4P | | | | | h | | | | | | | | | | |
| V-2SV<br>V-2SVE | | NF125-SEV, NF125-HEV, NF125-SGV<br>NF125-LGV, NF125-HGV, NF125-RGV<br>NF160-SGV, NF160-LGV, NF160-HGV<br>NF250-CV, NF250-SV, NF250-HV<br>NF250-SGV, NF250-LGV, NF250-HGV<br>NF250-SEV, NF250-HEV, NF250-RGV | 2P, 3P | NV125-SEV, NV125-HEV<br>NV250-CV, NV250-SV, NV250-HV<br>NV250-SEV, NV250-HEV | 3P | | | e | 41 | | | | | – | 35 | 126 | | K |
| | | | 4P | | 4P | | | f | | | | | | | | | | |
| V-2UV<br>V-2UVE | | NF250-UV | 2P, 3P | – | – | | | g | | | | | | 37.5 | | 201 | | |
| | | | 4P | | | | | h | | | | | | | | | | |
| V-03SVUL2 | – | NF50-SVFU | 2P | NV50-SVFU | 2P | Fig. 1 | a | d | 39 | 61 | 125 | – | – | – | 9 | 82.5 | M4 screw or ϕ5 | M |
| V-03SVUL | | | 3P | | 3P | | | e | | | | | | | 18 | | | N |
| V-05SVUL2 | (*1) Adjusting unit V-AD3S is mounted on stationary type. | NF100-CVFU | 2P | – | – | Fig. 2 | b | d | 39 | 61 | 125 | – | – | – | 12.5 | 111 | | N |
| V-05SVUL | | | 3P | NV100-CVFU | 3P | | | e | | | | 162 | 300 | | 25 | | | L |
| V-1SVUL | | NF125-SVU, NF125-HVU | 3P | NV125-SVU, NV125-HVU | 3P | Fig. 2 | b | g | 39 | 61 | 125 | 162 | 300 | 6 | 30 | 123 | | L |
| V-2SVUL | | NF250-SVU, NF250-HVU | 3P | NV250-SVU, NV250-HVU | 3P | | | e | 41 | | | | | – | 35 | 126 | | K |
| V-2SUL | | NF225-CWU | 3P | – | 3P | | | | | 61 | 125 | 162 | 300 | | 35 | 126 | | – |
| V-4S<br>V-4SE | (*1) Adjusting unit V-AD3L is mounted on stationary type. | NF400-CW/SW/SEW/HEW/REW<br>NF630-CW/SW/SEW/HEW/REW | 2P, 3P, 4P | NV400-CW/SW/SEW/HEW/REW<br>NV630-CW/SW/SEW/HEW | 3P, 4P | Fig. 3 | c | j | 76 | 97 | 191 | 233 | 300 | – | 44 | 194 | M6 screw or ϕ7 | – |
| V-4U<br>V-4UE | | NF400-UEW | 3P | – | – | | | h | | 194 | 288 | 330 | 397 | 20 | | 234 | | |
| V-8S<br>V-8SE | | NF800-CEW/SDW/SEW/HEW/REW | 2P, 3P, 4P | NV800-SEW/HEW | 3P | | | j | | 97 | 191 | 233 | 300 | – | 70 | 243 | | |
| V-4SUL | | NF-SKW | 3P | – | 3P | | | | | | | | | | 44 | 194 | | |
| V-6SUL | | NF-SLW | 3P | – | – | | | | | | | | | | 70 | 243 | | |

Notes
*1 For the adjustable type, purchase the optional adjusting unit V-AD3S or V-AD3L.
*2 The dimensions of the adjustable type models provided with the adjusting unit V-AD3S or V-AD3L are shown.
*3 When using the operating handle for a plug-in type model with a frame size of 250A or below, specify so.
*4 The dimensions on the front connection type are shown. For the rear connection and plug-in types, separately consult us.
*5 The circuit breaker can be tripped by operating the trip button while the door is open. (The trip button position varies depending on the model.)
*6 The handle cannot be used when the circuit breaker is installed on IEC 35-mm rails.

Remarks
1. The products whose model names contain E are designed for emergency stop. The delivery category is ●. That of V-05SVE is ●.
2. When the operating handle is fitted to NV, the test button cannot be pressed easily. If necessary, use a circuit breaker with TBL or TBM. When using an Earth Leakage Alarm Breaker, use the externally resetting type (ECA-SLT) or automatically resetting type (ARS).

## ●Installation procedure

For details, please refer to Operating Handle Installation Manual supplied with the product.

### ① Installation to a breaker

Install the operating handle to the circuit breaker in accordance with the following procedure.

| | 250A frame and below | 400 to 800A frames |
|---|---|---|
| Installation procedure | **(Installation procedure)**<br>① Operating handle for 3- or 4-pole circuit breaker<br>Set the rotary plate of the operating section to the OFF (symbol O) position, and fit the plate to the circuit breaker with the supplied operating section mounting screws and nuts. Install the circuit breaker to the panel with the circuit breaker mounting screws (2 pcs.).<br>② Operating handle for 2-pole circuit breaker<br>Install the operating section together with the circuit breaker to the panel with the supplied operating section mounting screws (2 pcs.) | **(Installation procedure)**<br>① Remove the circuit breaker cover screws (4 pcs.) in the same positions as the operating handle mounting holes.<br>② Install the circuit breaker with the circuit breaker mounting screws (4 pcs.).<br>③ Fit the supplied operating section mounting spacers (4 pcs.) between the circuit breaker and operating handle.<br>④ Set the rotary plate to the OFF (symbol O) position, and install the operating section to the circuit breaker with the supplied operating section mounting screws. |

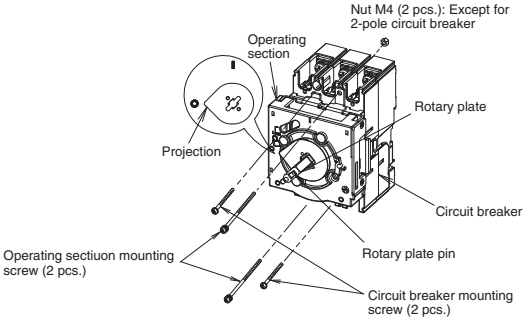


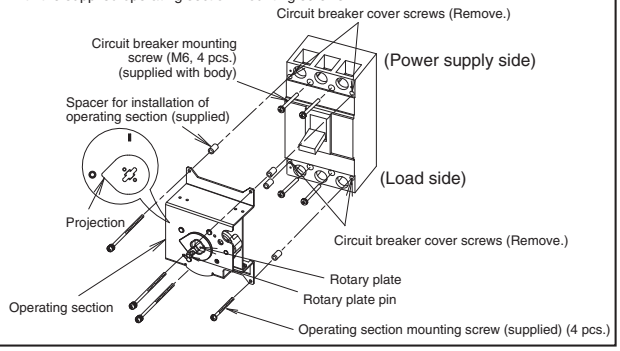


### ② Installation of operating handle section

Drill a hole in the door according to the dimensional drawing for front plate drilling given on the previous page, and install the operating handle section in accordance with the following procedure.

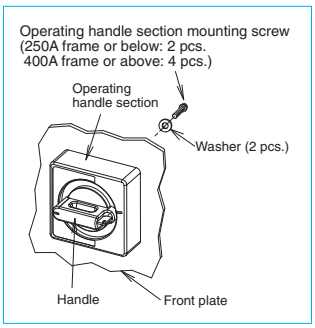


- Tighten the operating handle section from the back of the front plate. Temporarily tighten the screws to center the section in the hole.
- Set the handle of the operating handle section to the OFF state, tighten the front plate, and make sure that the handle can be smoothly turned to the ON and OFF positions. Turn the handle to the right and left in the OFF state, and make sure that OFF is displayed. If OFF is not displayed, move the operating handle section up and down and to the right and left for adjustment. (Take care that the operating handle section is in parallel with the circuit breaker.) Then, open the front plate, and finally tighten the screws.

Note The adjusting unit is not applicable to 2-pole external type circuit breakers. If it is used on a 2-pole external type circuit breaker, the positions may not be correctly displayed.

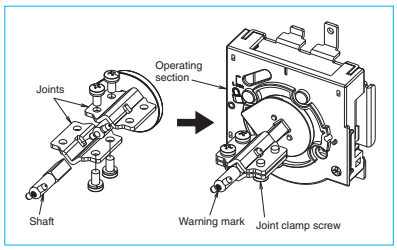


Make adjustments with the adjusting unit as stated below.

①External dimension drawing

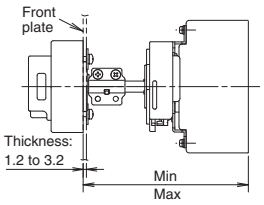


②Calculation of shaft cutting allowance

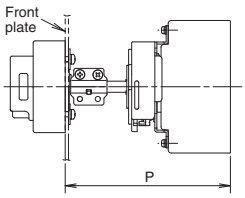


| Type name | Dimensions (mm) Min | Dimensions (mm) Max | Cutting allowance | Calculation |
|---|---|---|---|---|
| V-05SV<br>V-05SVUL<br>V-1SV<br>V-1SVUL<br>V-1SUL<br>V-2SV<br>V-2SVUL<br>V-2SUL | 162 | 300 | 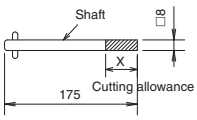  | (Cutting allowance)(P max)(panel size)<br>X = 300 mm - P |
| V-2SGUL | 180 | 318 | | |
| V-4S<br>V-8S<br>V-4SUL<br>V-6SUL | 233 | 300 | 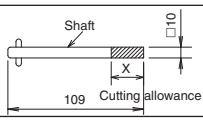  | |

Note The unit is applicable to operating handles for emergency stop (E).

## ●Door locking mechanism

The operating handle is provided with an interlock mechanism to prevent the door opening in the ON and TRIP positions. In the OFF position, the door can be opened. However, the door can be opened in the ON or TRIP position by pressing the release knob in the arrow direction with a tool (3 mm wide and 1.8 mm thick).

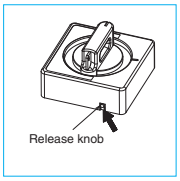


## ●Operation locking mechanism

### ① Operating handle section

Operation lock can be set only in the OFF Position. Up to three commercially available padlocks (A = 35 or 40 mm) can be fitted. Lockout hasps (scissors locks) can be used. When the operating handle section is locked with padlocks, also the door is locked.

### ② Operating section

The operating section can be locked so that the circuit breaker will not be turned on carelessly when the inside of the panel is inspected with the panel door open. Fit a padlock through the hole in the operating section of the operating handle.

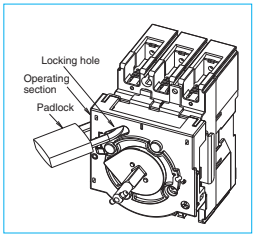


## ●Adjusting unit

The height from the circuit breaker mounting surface to the panel door can be adjusted by fitting the optional adjusting unit V-AD3S or V-AD3L. Cut the shaft of the adjusting unit according to the height.

## ●Padlocks

The user must prepare padlocks.
The dimensions of the padlocks are the same as those shown on page 129.

## ●How to order

Specify the model name of the operating handle.
For adjustable type, place an order for the adjustment unit.
(One lot includes 1 pc.)
250A frame or below: V-AD3S
400 to 800A frames: V-AD3L

## ●Interpretation of model name

(1) For 800A frame or below

V – 1 S UL E 2
1) 2) 3) 4) 5) 6)

1) V: Operating handle type name
2) 1: Circuit breaker group (0.5, 1, 2, 4, 6 or 8)
3) S: Classification of circuit breaker (S, SV, H, U, UV)
4) UL: Blank···General product UL···UL 489 listed product
5) E: Blank···Standard E···For emergency stop
6) 2: Blank···3P or 4P 2···2P

# 3. Terminal Covers

The terminal covers are used to avoid exposure of live parts. Many kinds of terminal covers, including large terminal covers (TC-L), small terminal covers (TC-S), transparent terminal covers (TTC), rear terminal covers (BTC) and plug-in terminal covers (PTC), for various models and applications are available, and they are helpful. (The terminal covers cannot be fitted to electrically operated circuit breakers of spring charged type (2) and motor-drive type (2). The standard terminal covers can be used for the spring charged type (1). For the motor-drive type, special terminal covers can be manufactured. Consult us for details.)

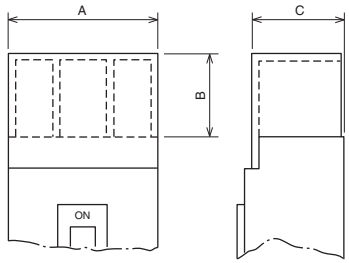


TC-L TC-S TTC

### ●Quick terminal covers

These covers are very convenient because they can be fitted only by inserting them into the mounting holes in the circuit breaker body. To remove the terminal cover, shift the projections of the terminal cover with the tip of a slotted screwdriver or finger, and draw it out.

## ●Table of variable dimensions

**Table 6-22 Large terminal covers (TC-L)**

| Type name | Color | Number of poles of circuit breaker | Applicable model | | Dimensions (mm) | | | Contents | | | Appearance | Remarks |
|---|---|---|---|---|---|---|---|---|---|---|---|---|
| | | | MCCB | ELCB | A | B | C | Number of covers | Cover mounting screw | Sealing plate | | |
| TCL-03CS2W | White | 2 | NF30-CS | – (*1) | 43.5 | 25 | 30.5 | 2 | – | 2 | Quick type<br>The cover can be sealed with the sealing plate. | |
| TCL-03CS3W | White | 3 | | – | 67 | 25 | 30.5 | 2 | – | 2 | | |
| TCL-05SV2 (*2)(*8) | White | 2 | NF32-SV<br>NF63-CV/SV/HV | – | 50 | 25 | 65.5 | 2 | – | 2 | | |
| TCL-05SV2L (*2)(*9) | White | 2 | NF32-SV<br>NF63-CV/SV/HV | – | 50 | 40 | 65.5 | 2 | – | 2 | | |
| TCL-05SV3 (*3)(*8) | White | 3 | NF32-SV<br>NF63-CV/SV/HV | NV32-SV, NV63-HV | 75 | 25 | 65.5 | 2 | – | 2 | | |
| | White | 2, 3 | – | NV63-CV/SV | | | | | | | | |
| TCL-05SV3L (*3)(*9) | White | 3 | NF32-SV, NF63-CV/SV/HV | NV32-SV, NV63-HV | 75 | 40 | 65.5 | 2 | – | 2 | | |
| | White | 2, 3 | – | NV63-CV/SV | | | | | | | | |
| TCL-05SV4 (*3) | White | 4 | NF63-SV/HV | – | 100 | 25 | 65.5 | 2 | – | 2 | | |
| TCL-1SV2 (*2) | White | 2 | NF125-CV/SV | – | 60 | 40 | 65.5 | 2 | – | 2 | | |
| TCL-1SV3 (*3) | White | 3 | NF125-CV/SV | NV125-CV/SV/HV | 90 | 40 | 65.5 | 2 | – | 2 | | |
| | White | 2, 3 | NF125-HV/UV | – | | | | | | | | |
| TCL-1SV4 (*3) | White | 4 | NF125-SV/HV/UV | NV125-SV/HV | 120 | 40 | 65.5 | 2 | – | 2 | | |
| TCL-2SV3 (*3)(*10) | White | 2, 3 | NF125-SGV/LGV/HGV/RGV<br>NF160-SGV/LGV/HGV<br>NF250-SGV/LGV/HGV/RGV<br>NF250-CV/SV/HV/UV, NF250-SEV/HEV<br>NF125-SEV/HEV | NV250-CV/SV/HV<br>NV250-SEV/HEV<br>NV125-SEV/HEV | 105 | 40 | 65.5 | 2 | – | 2 | | |
| | White | 3 | (*6) | | | | | | | | | |
| TCL-2SV3L (*3)(*11) | White | 2, 3 | NF125-SGV/LGV/HGV/RGV<br>NF160-SGV/LGV/HGV<br>NF250-SGV/LGV/HGV/RGV<br>NF250-CV/SV/HV/UV, NF250-SEV/HEV<br>NF125-SEV/HEV | NV250-CV/SV/HV<br>NV250-SEV/HEV<br>NV125-SEV/HEV | 105 | 50 | 65.5 | 2 | – | 2 | | |
| TCL-2SV4 (*3)(*5) | White | 4 | NF250-SV/HV/UV<br>NF250-SEV/HEV<br>NF125-SEV/HEV<br>NF225-SWM (*6) | NV250-SV/HV<br>NV250-SEV/HEV<br>NV125-SEV/HEV | 140 | 40 | 65.5 | 2 | – | 2 | | |
| TCL-4SW3 (*3) | White | 2, 3 | NF400-CW/SW/SEW<br>NF630-CW/SW/SEW | NV400-CW/SW/SEW<br>NV630-CW/SW/SEW | 171 | 110 | 99.5 | 2 | – | 2 | | |
| | White | 3 | NF400-SEP with MDU (*7) | – | | | | | | | | |
| | | | NF400-UEW (*4) | – | 171 | 110 | 132.5/196.5 | 2 | – | | | |
| TCL-4SW4 (*3) | White | 4 | NF400-SW/SEW/HEW<br>NF630-SW/SEW<br>NF400-SEP with MDU (*7) | NV400-SEW/HEW<br>NV630-SEW | 240 | 110 | 105 | 2 | 6 | – | Screw type | Use in combination with insulating barrier. |
| TCL-8SW3 (*3) | White | 2, 3 | NF800-CEW/SDW/SEW/HEW/REW | NV800-SEW/HEW | 224 | 155 | 103.5 | 2 | 4 | – | | |
| | White | 3 | NF600-SEP with MDU/HEP with MDU (*7)<br>NF800-SEP with MDU/HEP with MDU (*7) | – | | | | | | | | |
| TCL-8UW3 | Transparent | 3 | NF800-UEW (*4) | – | 220 | 155 | 146/194.5 | 2 | 4 | – | | |
| TCL-8SW4 (*3) | White | 4 | NF800-SEW/HEW<br>NF600-SEP with MDU/HEP with MDU (*7)<br>NF800-SEP with MDU/HEP with MDU (*7) | – | 294 | 155 | 103.5 | 2 | 6 | – | | |
| TCL-8UW4 | Transparent | 4 | NF400-UEW, NF800-UEW (*4) | – | 290 | 155 | 146/194.5 | 2 | 6 | – | | |
| TCL-10SW3 | Transparent | 3 | NF1000-SEW<br>NF1250-SEW/SDW | – | 220 | 150 | 139 | 2 | 4 | – | | |
| TCL-10SW4 | Transparent | 4 | NF1000-SEW<br>NF1250-SEW/SDW | – | 290 | 150 | 139 | 2 | 4 | – | | |
| TCL-03SVU2 (*3) | White | 2 | NF50-SVFU | NV50-SVFU | 36 | 30 | 65.5 | 2 | – | – | Quick type<br>(Remove the existing cover from the body, and fit the terminal cover.) | |
| TCL-03SVU3 (*3) | White | 3 | NF50-SVFU | NV50-SVFU | 54 | 30 | 65.5 | 2 | – | – | | |
| TCL-05SVU2 (*2)(*8) | White | 2 | NF100-CVFU | – | 50 | 25 | 65.5 | 2 | 2 | – | Screw type | |
| TCL-05SU2L (*2)(*9) | White | 2 | NF100-CVFU | – | 50 | 40 | 65.5 | 2 | 2 | – | | |
| TCL-05SVU3 (*3)(*8) | White | 3 | NF100-CVFU | NV100-CVFU | 75 | 25 | 65.5 | 2 | 2 | – | | |
| TCL-05SVU3L (*3)(*9) | White | 3 | NF100-CVFU | NV100-CVFU | 75 | 40 | 65.5 | 2 | 2 | – | | |
| TCL-1SVU3 (*3) | White | 2, 3 | NF125-SVU | – | 90 | 40 | 65.5 | 2 | 2 | – | Screw type<br>(Remove the existing cover from the body, and fit the terminal cover.) | |
| | | 3 | NF125-HVU | NV125-SVU/HVU | | | | | | | | |
| TCL-2SVU3 (*3)(*10) | White | 3 | NF250-SVU/HVU | NV250-SVU/HVU | 105 | 40 | 65.5 | 2 | 2 | – | Screw type<br>(Remove the existing cover from the body, and fit the terminal cover.) | |
| TCL-2SVU3L (*3)(*11) | White | 3 | NF250-SVU/HVU | NV250-SVU/HVU | 105 | 50 | 65.5 | 2 | 2 | – | Screw type<br>(Remove the existing cover from the body, and fit the terminal cover.) | |
| TCL-2SWU3 (*10) | White | 3 | NF225-CWU | – | 105 | 40 | 65.5 | 2 | – | – | Quick type<br>(Remove the existing cover from the body, and fit the terminal cover.) | |
| TCL-2SWU3L (*3)(*11) | White | 3 | NF225-CWU | – | 105 | 50 | 65.5 | 2 | – | – | Quick type<br>(Remove the existing cover from the body, and fit the terminal cover.) | |
| TCL-4SKW | White | 3 | NF-SKW | – | 171 | 110 | 99.5 | 2 | – | 2 | Quick type | |
| TCL-6SLW | Transparent | 3 | NF-SLW | – | 224 | 155 | 103.5 | 2 | 4 | – | Screw type | Use in combination with insulating barrier. |

Notes
*1 For 2-pole NV, use TC-L for 3-pole circuit breaker.
*2 For a circuit breaker with F or V type operating handle, specify the model name with F at the end.
(F or V type operating handle dedicated models, screws are used for fixing.)
*3 The standard models can be used in combination with F and V Type Operating Handles.
*4 The dimension C is the size on the power supply side and load side.
*5 When a crimp terminal applicable to wires with a size of 117.2 to 152.05 mm$^2$ (Model 2CR-150 or CB150-S8) is used, TC-L cannot be fitted. Insulate the terminal from TC-S with insulating tube or taping.
*6 In the case of installation on the body, specify the model name with-MDU at the end.
*7 It cannot be installed in the case of installation on the body.
*8 Applicable to circuit breakers with rating of 75A or less (max. wire size 25 mm$^2$)
*9 Applicable to circuit breakers with rating of 125A or less (max. wire size 60 mm$^2$)
*10 Applicable to circuit breakers with rating of 200A or less (max. wire size 100 mm$^2$)
*11 Applicable to circuit breakers with rating of 250A or less (max. wire size 150 mm$^2$) (Applicable to UL wire 300MCM)

Remarks
1. The wire sizes shown in the above notes *10 to *13 are those of the 600-V vinyl insulated wires.
2. Insulate the exposed live parts of crimp terminals with insulating tape or the like.
3. When protection from the power supply and load sides is necessary, separately consult us.

### Table 6-23 Small terminal covers (TC-S)

| Type name | Color | Number of poles of circuit breaker | Applicable model | | Dimensions (mm) | | | Contents | | | Appearance | Remarks |
|---|---|---|---|---|---|---|---|---|---|---|---|---|
| | | | MCCB | ELCB | A | B | C | Number of covers | Cover mounting screw | Sealing plate | | |
| TCS-03CS2W | White | 2 | NF30-CS | – | 43.5 | 5 | 30.5 | 2 | – | 2 | 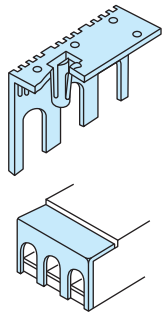 Quick type The cover can be sealed with the sealing plate. | |
| TCS-03CS3W | White | 3 | | – | 67 | 5 | 30.5 | 2 | – | 2 | | |
| TCS-05SV2 (*1) | White | 2 | NF32-SV, NF63-CV/SV/HV | – | 50 | 5 | 65.5 | 2 | – | 2 | | |
| TCS-05SV3 (*2) | White | 3 | NF32-SV, NF63-CV/SV/HV | NV32-SV, NV63-HV | 75 | 5 | 65.5 | 2 | – | 2 | | |
| | White | 2, 3 | – | NV63-CV/SV | | | | | | | | |
| TCS-1SV2(*2) | White | 2 | NF125-CV/SV | – | 60 | 6.5 | 65.5 | 2 | – | 2 | | |
| TCS-1SV3(*3) | White | 3 | NF125-CV/SV | NV125-CV/SV/HV | 90 | 6.5 | 65.5 | 2 | – | 2 | | |
| | White | 2, 3 | NF125-HV/UV | – | | | | | | | | |
| TCS-2SV3 (*2) | White | 2, 3 | NF125-SGV/LGV/HGV/RGV<br>NF160-SGV/LGV/HGV<br>NF250-SGV/LGV/HGV/RGV<br>NF250-CV/SV/HV/UV, NF250-SEV/HEV<br>NF125-SEV/HEV | NV250-CV/SV/HV<br>NV250-SEV/HEV<br>NV125-SEV/HEV | 105 | 6.5 | 65.5 | 2 | – | 2 | | |

Notes *1 For a circuit breaker with F type operating handle, specify the model name with F at the end.
(F type operating handle dedicated models, screws are used for fixing.)
*2 The standard models can be used in combination with F and V Type Operating Handles.

Remarks 1.Small terminal covers for 4-pole circuit breakers are available.
2.Insulate the exposed live parts of crimp terminals with insulating tape or the like.

### Table 6-24 Transparent terminal covers (TTC)

| Type name | Number of poles of circuit breaker | Applicable model | | Dimensions (mm) | | | Contents | | | Appearance | Remarks |
|---|---|---|---|---|---|---|---|---|---|---|---|
| | | MCCB | ELCB | A | B | C | Number of covers | Cover mounting screw | Sealing plate | | |
| TTC-03CS2 | 2 | NF30-CS | – | 43.5 | 25 | 30.5 | 2 | – | 2 | Transparent 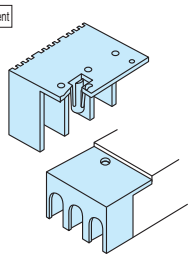 Quick type The cover can be sealed with the sealing plate. | |
| TTC-03CS3 | 3 | | – | 67 | 25 | 30.5 | 2 | – | 2 | | |
| TTC-05SV2 (*1) | 2 | NF32-SV<br>NF63-CV/SV/HV | – | 50 | 25 | 65.5 | 2 | – | 2 | | |
| TTC-05SV3 (*2) | 3 | NF32-SV<br>NF63-CV/SV/HV | NV32-SV, NV63-HV | 75 | 25 | 65.5 | 2 | – | 2 | | |
| | 2, 3 | – | NV63-CV/SV | | | | | | | | |
| TTC-1SV2 (*1) | 2 | NF125-CV/SV | – | 60 | 40 | 65.5 | 2 | – | 2 | | |
| TTC-1SV3 (*2) | 3 | NF125-CV/SV | NV125-CV/SV/HV | 90 | 40 | 65.5 | 2 | – | 2 | | |
| | 2, 3 | NF125-HV/UV | – | | | | | | | | |
| TTC-2SV3 (*2)(*3)(*5) | 2, 3 | NF125-SGV/LGV/HGV/RGV<br>NF160-SGV/LGV/HGV<br>NF250-SGV/LGV/HGV/RGV<br>NF250-CV/SV/HV/UV, NF250-SEV/HEV<br>NF125-SEV/HEV | NV250-CV/SV/HV<br>NV250-SEV/HEV<br>NV125-SEV/HEV | 105 | 40 | 65.5 | 2 | – | 2 | | |
| | 3 | – | – | | | | | | | | |
| TTC-4SW3 | 2, 3 | NF400-CW/SW/SEW<br>NF400-HEW/REW<br>NF630-CW/SW/SEW<br>NF630-HEW/REW | NV400-CW/SW/SEW<br>NV400-HEW/REW<br>NV630-CW/SW/SEW<br>NV630-HEW | 171 | 110 | 104.5 | 2 | 4 | – | | |
| | 3 | NF400-SEP with MDU/HEP with MDU(*4) | – | | | | | | | | |
| TTC-4SW4 | 4 | NF400-SW/SEW/HEW<br>NF630-SW/SEW/HEW<br>NF400-SEP with MDU/HEP with MDU(*4) | NV400-SEW/HEW<br>NV630-SEW | 240 | 110 | 104.5 | 2 | 6 | – | Transparent 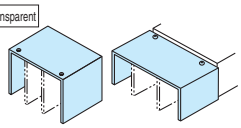 Screw type | Use in combination with insulating barrier. |
| TTC-8SW3 | 2, 3 | NF800-CEW/SDW/SEW<br>NF800-HEW/REW | NV800-SEW/HEW | 224 | 155 | 103.5 | 2 | 4 | – | | |
| | 3 | NF600-SEP with MDU/HEP with MDU (*4)<br>NF800-SEP with MDU/HEP with MDU (*4) | – | | | | | | | | |
| TTC-8SW4 | 4 | NF800-SEW/HEW<br>NF600-SEP with MDU/HEP with MDU (*4)<br>NF800-SEP with MDU/HEP with MDU (*4) | – | 294 | 155 | 103.5 | 2 | 6 | – | | |

Notes *1 For a circuit breaker with F type operating handle, specify the model name with F at the end.
(F type operating handle dedicated models, screws are used for fixing.)
*2 The standard models can be used in combination with F and V Type Operating Handles.
*3 When a crimp terminal applicable to wires with a size of 117.2 to 152.05 mm$^2$ (Model 2CR-150 or CB150-S8) is used, TTC cannot be fitted.
Use TCL-2SV3L. Or insulate the terminal from TC-S with insulating tube or taping.
*4 In the case of installation on the body, specify the model name with • MDU at the end.
*5 Applicable to circuit breakers with rating of 200A or less (max. wire size 100 mm$^2$)

<BTC>

Fig. 1

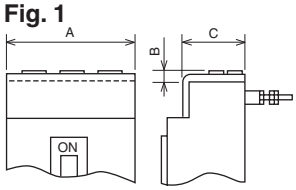


Fig. 2

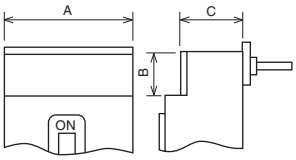


<PTC>

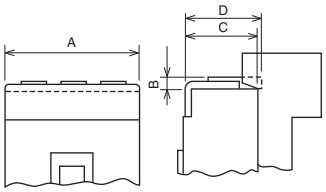


## Table 6-25 Rear terminal cover (BTC)

| Type name | Color | Number of poles of circuit breaker | Applicable model | | Dimensions (mm) | | | Contents | | | Appearance | Remarks |
|---|---|---|---|---|---|---|---|---|---|---|---|---|
| | | | MCCB | ELCB | A | B | C | Number of covers | Cover mounting screw | Sealing plate | | |
| BTC-03CS2W | White | 2 | NF30-CS | – | 43.5 | 6.5 | 30.5 | 2 | – | 2 | 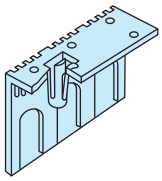 | Cover for connection block in the case of simple rear connection |
| BTC-03CS3W | White | 3 | | – | 67 | 6.5 | 30.5 | 2 | – | 2 | | Cover for stud connection block on back in the case of rear connection type |
| BTC-05SV2 | White | 2 | NF32-SV<br>NF63-CV/SV/HV | – (*1) | 50 | 5 | 65.5 | 2 | – | 2 | | |
| BTC-05SV3 | White | 3 | NF32-SV<br>NF63-CV/SV/HV | NV32-SV, NV63-HV | 75 | 5 | 65.5 | 2 | – | 2 | | |
| | White | 2, 3 | – | NV63-CV/SV | | | | | | | | |
| BTC-1SV2 | White | 2 | NF125-CV/SV | – | 60 | 6.5 | 65.5 | 2 | – | 2 | | |
| BTC-1SV3 | White | 3 | NF125-CV/SV | NV125-CV/SV/HV | 90 | 6.5 | 65.5 | 2 | – | 2 | | |
| | White | 2, 3 | NF125-HV/UV | – | | | | | | | | |
| BTC-2SV3 | White | 2, 3 | NF125-SGV/LGV/HGV/RGV<br>NF160-SGV/LGV/HGV<br>NF250-SGV/LGV/HGV/RGV<br>NF250-CV/SV/HV/UV, NF250-SEV/HEV<br>NF125-SEV/HEV | NV250-CV/SV/HV<br>NV250-SEV/HEV<br>NV125-SEV/HEV | 105 | 6.5 | 65.5 | 2 | – | 2 | | |
| BTC-4SW3 | White | 2, 3 | NF400-CW/SW/SEW<br>NF630-CW/SW/SEW | NV400-CW/SW/SEW<br>NV630-CW/SW/SEW | 140 | 42 (*2) | 99.5 | 2 | – | 2 | Quick type<br>The cover can be sealed with the sealing plate. 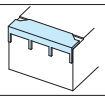 | |
| | White | 3 | NF400-SEP with MDU (*5) | (*5) | | | | | | | | |
| | | | NF400-UEW (*4) | – | 140 | 42 (*2) | 132.5/ 196.5 | 2 | – | | | |
| BTC-4SW4 (*3) | Transparent | 4 | NF400-SW/SEW/HEW<br>NF630-SW/SEW/HEW<br>NF400-SEP with MDU/HEP with MDU (*5) | NV400-SEW/HEW<br>NV630-SEW | 185 | 42 (*2) | 97.5 | 2 | 6 | – | 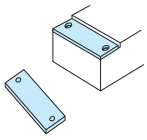 Screw type | |
| BTC-8SW3 (*3) | Transparent | 2, 3 | NF800-CEW/SDW/SEW/HEW/REW | NV800-SEW/HEW | 210 | 32 (*2) | 97.5 | 2 | 8 | – | | |
| | Transparent | 3 | NF600-SEP with MDU/HEP with MDU (*5)<br>NF800-SEP with MDU/HEP with MDU (*5) | – | | | | | | | | |
| | | | NF800-UEW (*4) | – | 210 | 32 (*2) | 146/ 194.5 | 2 | 4 | – | | |
| BTC-8SW4 (*3) | Transparent | 4 | NF800-SEW/HEW<br>NF600-SEP with MDU/HEP with MDU (*5)<br>NF800-SEP with MDU/HEP with MDU (*5) | (*5) | 280 | 32 (*2) | 97.5 | 2 | 10 | – | | |
| | | | NF400-UEW, NF800-UEW (*4) | – | 280 | 32 (*2) | 146/ 194.5 | 2 | 6 | – | | |

Notes *1 For 2-pole ELCB, use BTC for 3-pole circuit breaker.
*2 Dimension B in Fig. 2
*3 The covers can be used for plug-in type circuit breakers. Other models are designed only for rear connection type.
*4 The dimension C is the size on the power supply side and load side.
*5 In the case of installation on the body, it can be fitted only on the power supply side.

Remarks 1.PTC-4SW3 can be used as the back terminal covers for NF400-HEW/REW, NF630-HEW/REW, NV400-HEW/REW and NV630-HEW.
2.For terminal covers for 4-pole circuit breakers not listed above, consult us.

## Table 6-26 Plug-in terminal covers (PTC)

| Type name | Color | Number of poles of circuit breaker | Applicable model | | Dimensions (mm) | | | | Contents | | | Appearance | Remarks |
|---|---|---|---|---|---|---|---|---|---|---|---|---|---|
| | | | MCCB | ELCB | A | B | C | D | Number of covers | Cover mounting screw | Sealing plate | | |
| PTC-05SV2 | White | 2 | NF32-SV<br>NF63-CV/SV/HV | – | 50 | 6.5 | 65.5 | 72 | 2 | 2 | – | 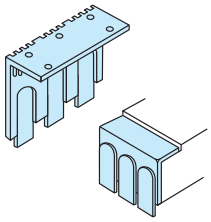 Screw type | Cover for stud connection block in the case of plug-in type |
| PTC-05SV3 | White | 3 | NF32-SV<br>NF63-CV/SV/HV | NV32-SV, NV63-HV | 75 | 6.5 | 65.5 | 72 | 2 | 2 | – | | |
| | White | 2, 3 | – | NV63-CV/SV | | | | | | | | | |
| PTC-1SV2 | White | 2 | NF125-CV/SV | – | 60 | 6.5 | 65.5 | – | 2 | 4 | – | | |
| PTC-1SV3 | White | 3 | NF125-CV/SV | NV125-CV/SV/HV | 90 | 6.5 | 65.5 | – | 2 | 4 | – | | |
| | White | 2, 3 | NF125-HV/UV | – | | | | | | | | | |
| PTC-2SV3 | White | 2, 3 | NF125-SGV/LGV/HGV/RGV<br>NF160-SGV/LGV/HGV<br>NF250-SGV/LGV/HGV/RGV<br>NF250-CV/SV/HV/UV, NF250-SEV/HEV<br>NF125-SEV/HEV | NV250-CV/SV/HV<br>NV250-SEV/HEV<br>NV125-SEV/HEV | 105 | 6.5 | 65.5 | 78.5 | 2 | 4 | – | | |
| PTC-4SW3 (*2) | Transparent | 2, 3 | NF400-CW/SW/SEW<br>NF630-CW/SW/SEW | NV400-CW/SW/SEW<br>NV630-CW/SW/SEW | 140 | 42 | 97.5 | – | 2 | 4 | – | Same as screw type of BTC | |
| | | | NF400-HEW/REW (*1)<br>NF630-HEW/REW (*1) | NV400-HEW/REW (*1)<br>NV630-HEW (*1) | | | | | | | | | |

Notes *1 The covers can be used as back terminal covers.
*2 See Fig. 2 of BTC.

**Table 6-27 List of terminal covers applicable to F and V Type Operating Handles**

| Type name | | | Applicable operating handles | Number of poles of circuit breaker | Applicable model | |
|---|---|---|---|---|---|---|
| Large terminal covers (TC-L) | Small terminal covers (TC-S) | Transparent terminal covers (TTC) | | | MCCB | ELCB |
| TCL-05SV2F (*2)(*3)<br>TCL-05SV2LF (*2)(*4) | TCS-05SV2F (*2) | TTC-05SV2F (*2) | F-05SV2, V-05SV2 | 2 | NF32-SV, NF63-CV/SV/HV | – (*1) |
| TCL-05SV3 (*3)<br>TCL-05SV3L (*4) | TCS-05SV3 | TTC-05SV3 | F-05SV, V-05SV | 3 | NF32-SV, NF63-CV/SV/HV | NV32-SV, NV63-HV |
| | | | | 2, 3 | – | NV63-CV/SV |
| TCL-05SV4 | – | – | | 4 | NF32-SV, NF63-CV/SV/HV | – |
| TCL-1SV2F (*2) | TCS-1SV2F (*2) | TTC-1SV2F (*2) | F-1SV2, V-1SV2 | 2 | NF125-CV/SV | – |
| TCL-1SV3 | TCS-1SV3 | TTC-1SV3 | F-1SV, V-1SV | 3 | NF125-CV/SV | NV125-CV/SV/HV |
| | | | | 2, 3 | NF125-HV/UV | – |
| TCL-1SV4 | – | – | | 4 | NF125-CV/SV/HV/UV | NV125-CV/SV/HV |
| TCL-2SV3 (*5)<br>TCL-2SV3L (*6) | TCS-2SV3 | TTC-2SV3 | F-2SV, V-2SV | 2, 3 | NF250-CV/SV/HV/UV, NF250-SEV/HEV<br>NF125-SEV/HEV | NV250-CV/SV/HV, NV250-SEV/HEV<br>NV125-SEV/HEV |
| TCL-2SV4 | – | – | | 4 | NF250-CV/SV/HV/UV, NF250-SEV/HEV<br>NF125-SEV/HEV | NV250-CV/SV/HV, NV250-SEV/HEV<br>NV125-SEV/HEV |
| TCL-4SW3<br>TCL-4SP3W | – | TTC-4SW3 | F-4S<br>V-4S | 2, 3 | NF400-CW/SW/SEW/HEW/REW<br>NF630-CW/SW/SEW/HEW/REW | NV400-CW/SW/SEW/HEW/REW<br>NV630-CW/SW/SEW/HEW |
| TCL-4SW4 | – | TTC-4SW4 | | 4 | NF400-SW/SEW/HEW<br>NF630-SW/SEW/HEW | NV400-SEW/HEW<br>NV630-SEW |
| TCL-8SW3 | – | TTC-8SW3 | F-8S<br>V-8S | 2, 3 | NF800-CEW/SDW/SEW/HEW/REW | NV800-SEW/HEW |
| TCL-8SW4 | – | TTC-8SW4 | | 4 | NF800-SEW/HEW | – |

Notes *1 For 2-pole NV, use a terminal cover for 3-pole circuit breaker.
*2 Only for F and V Type Operating Handles (screw type)
*3 Applicable to circuit breakers with rating of 75A or less (max. wire size 25 mm²)
*4 Applicable to circuit breakers with rating of 125A or less (max. wire size 60 mm²)
*5 Applicable to circuit breakers with rating of 200A or less (max. wire size 100 mm²)
*6 Applicable to circuit breakers with rating of 250A or less (max. wire size 150 mm²)

Remark: 1. The terminal covers for UL 489 Listed Circuit Breakers can be normally combined with F Type Operating Handles.

# 4. Insulating Barriers

The insulating barrier enhances the insulation between the phases of circuit breaker terminals. It also prevents accidents due to conductive foreign matter and dust, and secondary accidents when isolating a fault current.

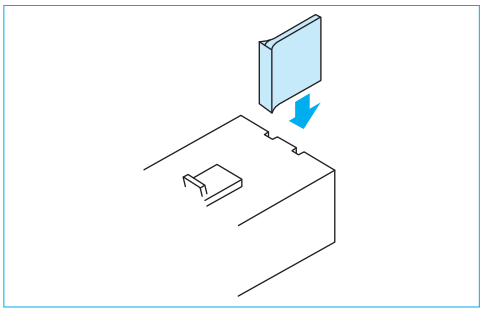

## ●The insulating barrier is available for the models listed in the table below.

**Table 6-28**

("●" denotes optional)

| Applicable model | | Connecting method | | | |
|---|---|---|---|---|---|
| MCCB | ELCB | Front | Rear | Flush plate | Plug-in |
| NF32-SV, NF63-CV<br>NF125-CV, NF100-CVFU | NV32-SV, NV63-CV<br>NV125-CV, NV100-CVFU | ● | – | – | – |
| NF63-SV/HV<br>NF125-SV/HV | NV63-SV/HV<br>NV125-SV/HV | Standard attachment | – | – | – |
| NF125-SEV/HEV, NF125-ZEV<br>NF250-CV/SV/HV/SEV/HEV<br>NF125-SGV/LGV/HGV/RGV<br>NF160-SGV/LGV/HGV<br>NF250-SGV/LGV/HGV/RGV<br>NF250-SEV/HEV/ZEV with MDU | NV125-SEV/HEV<br>NV250-CV/SV/HV/SEV/HEV<br>NV250-SEV/HEV with MDU | Standard attachment | – | – | Standard attachment |
| NF125-SVU<br>NF125-HVU<br>NF250-SVU<br>NF250-HVU<br>NF225-CWU | NV125-SVU<br>NV125-HVU<br>NV250-SVU<br>NV250-HVU<br>NV100-SWU | Standard attachment | – | – | – |
| NF400-CW/SW/SEW/HEW/REW/UEW<br>NF630-CW/SW/SEW/HEW/REW | NV400-CW/SW/SEW/HEW/REW<br>NV630-CW/SW/SEW/HEW | Standard attachment | ● | ● | Standard attachment |
| NF400-UEW(4P)<br>NF800-CEW/SEW/HEW/REW/SDW | NV800-SEW/HEW | Standard attachment | ● | ● | ● |
| NF800-UEW | – | Standard attachment | ● | ● | – |
| NF-SKW, NF-SLW | – | Standard attachment | – | – | – |
| NF1000-SEW, NF1250-SEW/SDW | – | Standard attachment | – | – | Standard attachment |
| NF1600-SEW/SDW | – | Standard attachment | – | – | – |

Always mount the insulating barrier when it comes with the circuit breaker.

## ●Insulating Barrier-Front (BA-F)

### Table 6-29 Summary of dimensions

| Type name | Applicable model | | Dimensions (mm) | | Quantity per breaker | | | Reference diagram |
|---|---|---|---|---|---|---|---|---|
| | MCCB | ELCB | A | B | 2P | 3P | 4P | |
| BAF-05SV | NF32-SV<br>NF63-CV<br>NF125-CV | NV32-SV<br>NV63-CV<br>NV125-CV | 50 | 59.5 | 1<br>(*2) | 2 | 3 | 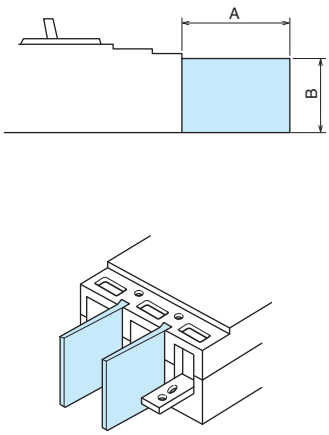 |
| | NF63-SV/HV<br>NF125-SV/HV/UV | NV63-SV/HV<br>NV125-SV/HV | | | | | | |
| BAF-2SV | NF125-SEV/HEV<br>NF125-SGV/LGV/HGV/RGV<br>NF160-SGV/LGV/HGV<br>NF250-CV/SV/HV/UV/SEV/HEV<br>NF250-SGV/LGV/HGV/RGV<br>NF250-SEV/HEV/ZEV with MDU | NV125-SEV/HEV<br>NV250-CV/SV/HV/SEV/HEV<br>NV250-SEV/HEV with MDU | 100 | 59.5 | 2 | 4 | 6 | |
| BAF-05SVU | NF100-CVFU | NV100-CVFU | 50 | 59.5 | 2 | 4 | – | |
| | NF125-SVU<br>NF125-HVU | NV125-SVU<br>NV125-HVU | | | | | | |
| BAF-2SVU | NF250-SVU<br>NF250-HVU | NV250-SVU<br>NV250-HVU | 100 | 59.5 | – | 4 | – | |
| BAF-2SWU | NF225-CWU | – | 100 | 59.5 | – | 4 | – | |
| BAF-4SW | NF400-CW/SW/SEW/HEW/REW<br>NF630-CW/SW/SEW/HEW/REW | NV400-CW/SW/SEW/HEW/REW<br>NV630-CW/SW/SEW/HEW | 110 | 98.5 | 2 | 4 | 6 | |
| BAF-4UW (*1) | NF400-UEW(3P) | – | 110 | 132/<br>98.5 | – | 4 | – | |
| BAF-8SW | NF800-CEW/SEW/SDW/HEW/REW | NV800-SEW/HEW | 110 | 98.5 | 1 | 2 | 3 | |
| BAF-10SW | NF400-UEW(4P)<br>NF800-UEW, NF1000-SEW<br>NF1250-SEW/SDW | – | 110 | 132 | 1 | 2 | 3 | |
| BAF-SKW | NF-SKW | – | 110 | 98.5 | – | 4 | – | |
| BAF-SLW | NF-SLW | – | 110 | 98.5 | – | 2 | – | |
| BAF-16SW | NF1600-SEW/SDW | – | 185 | 132 | 1 | 2 | 3 | |

Notes *1 The barriers BAF-4UW for the power supply and load sides vary in the dimension B.
*2 Not supplied with ELCB.

## ●Insulating Barrier-Rear (BA-B)

### Table 6-30 Summary of dimensions

| Type name | Applicable model | | Dimensions (mm) | | Quantity per breaker | | | Reference diagram |
|---|---|---|---|---|---|---|---|---|
| | MCCB | ELCB | A | B | 2P | 3P | 4P | |
| BAB-4SW | NF400-CW/SW/SEW/HEW/REW<br>NF400-UEW(3P)<br>NF630-CW/SW/SEW/HEW/REW | NV400-CW/SW/SEW/HEW/REW<br>NV630-CW/SW/SEW/HEW | 140 | 74.5 | – | 4 | 6 | 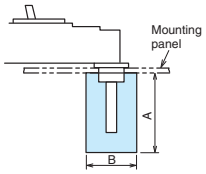 |
| BAB-8SW | NF800-CEW/SEW/SDW/HEW/REW<br>NF400-UEW(4P)<br>NF800-UEW | NV800-SEW/HEW | 140 | 74.5 | – | 4 | 6 | |

Drilling size for use of BA-B (in the case of 3-pole circuit breaker)

| **NF400-CW, NF400-SW, NF400-SEW, NF400-HEW, NF400-REW, NF400-UEW<br>NV400-CW, NV400-SW, NV400-SEW, NV400-HEW, NV400-REW<br>NF630-CW, NF630-SW, NF630-SEW, NF630-HEW, NF630-REW<br>NV630-CW, NV630-SW, NV630-SEW, NV630-HEW** | **NF800-CEW, NF800-SEW, NF800-HEW, NF800-REW, NF800-UEW<br>NV800-SEW, NV800-HEW** |
|---|---|
| Power supply side Note The dimensions in brackets are those for NF400-UEW.<br> 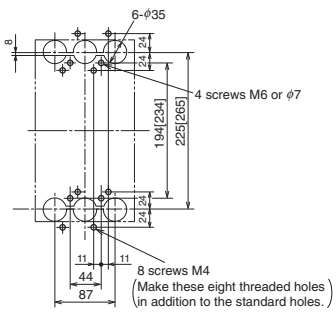 <br>Load side | Note The dimensions in brackets are those for NF800-UEW.<br> 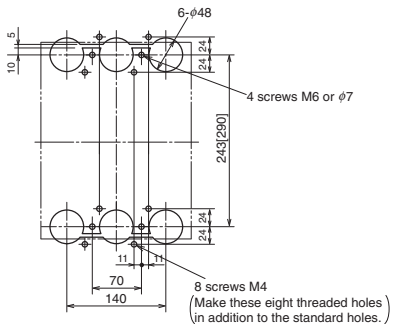 |

The drilling size drawings show the dimensions viewed from the rear side.

## ●Insulating Barrier-Plug-in (BA-P)

**Table 6-31 Summary of dimensions**

| Type name | Applicable model | | Dimensions (mm) | | Quantity per breaker | | | Reference diagram |
|---|---|---|---|---|---|---|---|---|
| | MCCB | ELCB | A | B | 2P | 3P | 4P | |
| BAP-2SV | NF125-SEV/HEV<br>NF125-SGV/LGV/HGV/RGV<br>NF160-SGV/LGV/HGV<br>NF250-CV/SV/HV<br>NF250-SGV/LGV/HGV/RGV<br>NF250-SEV/HEV | NV125-SEV/HEV<br>NV250-CV/SV/HV/SEV/HEV | 172 | 74.5 | 4 | 4 | 6 | 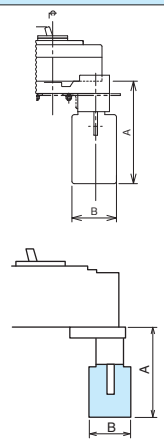 |
| BAP-4SW | NF400-CW/SW<br>NF400-SEW/HEW/REW/UEW<br>NF630-CW/SW<br>NF630-SEW/HEW/REW | NV400-CW/SW<br>NV400-SEW/HEW/REW<br>NV630-CW/SW<br>NV630-SEW/HEW | 178 | 74.5 | – | | | |
| BAP-8SW | NF800-CEW/SEW<br>NF800-HEW/REW | NV800-SEW/HEW | 172 | 74.5 | | | | |
| | NF1000-SEW<br>NF1250-SEW | – | 215 | 74.5 | | | | |

## ●Earth fault preventing barriers (BA-G)

**Table 6-32 Summary of dimensions**

| Type name | Applicable model | | Dimensions (mm) | | Quantity per breaker | Reference diagram |
|---|---|---|---|---|---|---|
| | MCCB | ELCB | A | B | 3P | |
| BAG-05SV3 | NF32-SV<br>NF63-CV/SV/HV | NV32-SV<br>NV63-CV/SV/HV | 30 | 75 | 1 | 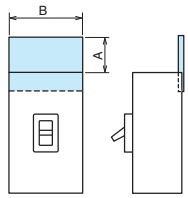 <br>Earth fault preventing barrier (3 poles) |
| BAG-1SV3 | NF125-CV/SV/HV | NV125-CV/SV/HV | 40 | 90 | | |
| BAG-2SV3 | NF125-SEV/HEV<br>NF250-CV/SV/HV/SEV/HEV<br>NF250-SEV/HEV/ZEV with MDU | NV125-SEV/HEV<br>NV250-CV/SV/HV/SEV/HEV<br>NV250-SEV/HEV with MDU | 63 | 105 | | |
| BAG-4SW3 | NF400-CW/SW/SEW/HEW/REW<br>NF630-CW/SW/SEW/HEW/REW | NV400-CW/SW/SEW/HEW/REW<br>NV630-CW/SW/SEW/HEW | 63 | 164 | | |
| BAG-4UW3 | NF400-UEW | – | 63 | 164 | | |
| BAG-8SW3 | NF800-CEW/SEW/SDW/HEW/REW | NV800-SEW/HEW | 110 | 210 | | |
| BAG-8UW3 | NF800-UEW | – | 110 | 210 | | |
| BAG-10SW3 | NF1000-SEW<br>NF1250-SEW/SDW | – | 98 | 210 | | |
| BAG-16SW3 | NF1600-SEW/SDW | – | 150 | 300 | | |

Also the earth fault preventing barriers for 2- and 4-pole circuit breakers are available.

# 5. Handle Lock Devices, Lock Covers, Auxiliary Handles, Card Holders

## (1) Handle Lock Devices (HL and HL-S)

These devices are used to lock the circuit breakers in the ON or OFF position. If overcurrent flows while the circuit breaker is locked, it will trip. Model HL (red resin moldings) to be fitted to handles and Model HL-S to be secured on circuit breaker covers are available. (Use a commercially available padlock having the nominal size shown in the right table. If a padlock in another size is used, the device may not lock correctly.)

Padlock size (mm)

| Application | A (Nominal size) | B | C |
|---|---|---|---|
| a | 25 | 11 | 4 |
| b | 35 | 19 | 5 |
| c | 40 | 22 or 23 | 5.5 |

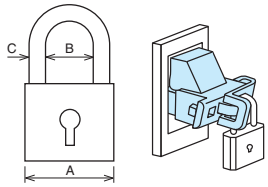

Padlock


Fig. 1

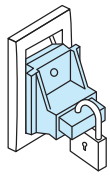
Fig. 2

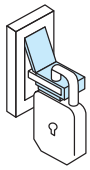
Fig. 3

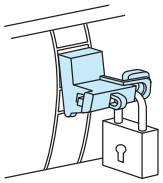
Fig. 4

### Table 6-33 HL

| Type name | Applicable model: MCCB | Applicable model: ELCB | Reference diagram | Padlock |
|---|---|---|---|---|
| HL-05FH | NF30-CS | – | Fig. 4 | a |
| HLN-05SV | NF32-SV, NF63-CV/SV/HV<br>NF125-CV/SV/HV/UV, NF125-SEV/HEV<br>NF125-SGV/LGV/HGV/RGV<br>NF160-SGV/LGV/HGV<br>NF250-CV/SV/HV/UV, NF250-SEV/HEV<br>NF250-SGV/LGV/HGV/RGV | NV32-SV, NV63-CV/SV/HV<br>NV125-CV/SV/HV, NV125-SEV/HEV<br>NV250-CV/SV/HV, NV250-SEV/HEV | Fig. 1 | |
| HLF-05SV | NF32-SV, NF63-CV/SV/HV<br>NF125-CV/SV/HV/UV, NF125-SEV/HEV<br>NF125-SGV/LGV/HGV/RGV<br>NF160-SGV/LGV/HGV<br>NF250-CV/SV/HV/UV, NF250-SEV/HEV<br>NF250-SGV/LGV/HGV/RGV | NV32-SV, NV63-CV/SV/HV<br>NV125-CV/SV/HV, NV125-SEV/HEV<br>NV250-CV/SV/HV, NV250-SEV/HEV | | |
| HLF-05SVU | NF125-SVU/HVU<br>NF250-SVU/HVU | NV125-SVU/HVU<br>NV250-SVU/HVU | | |
| | | – | | |
| HLF-2SWU | NF225-CWU | – | | |
| HL-4CW (*1) | NF400-CW | NV400-CW | Fig. 2 | c |
| HL-4SW (*1) | NF400-SW/SEW/HEW/REW/UEW<br>NF630-CW/SW/SEW/HEW/REW<br>NF800-CEW/SDW/SEW/HEW/REW/UEW | NV400-SW/SEW/HEW/REW<br>NV630-CW/SW/SEW/HEW<br>NV800-SEW/HEW | | |
| HL-4SP | NF-SKW/SLW | – | | |
| HL (*2) | NF1000-SEW, NF1250-SEW/SDW, NF1600-SEW/SDW | – | Fig. 3 | |

Notes *1 When a padlock is not used, the device can be used as a lock cover (LC).
*2 Place an order for a circuit breaker body combined with the device.

Remarks 1. One lot of HL-4CW and HL-4SW contains one piece, and one lot of others contains 10 pieces.
2. HLF types are used for OFF lock, and HLN types for ON lock.

### Table 6-34 HL-S

| Type name | Applicable model: MCCB | Number of poles | ELCB | Number of poles | Dimensions (mm): A | B | C | D | E | F | Reference diagram | Padlock |
|---|---|---|---|---|---|---|---|---|---|---|---|---|
| HLS-05SV2 (*1) | NF32-SV, NF63-CV, NF63-SV<br>NF63-HV | 2P | – | – | 32 | 75 | 50 | – | 63 | 32 | Fig. 5 | b |
| | NF125-CV, NF125-SV | 2P | – | – | | | 57 | | | | | |
| HLS-05SV (*1) | NF32-SV, NF63-CV, NF63-SV<br>NF63-HV | 3P | NV32-SV, NV63-HV | 3P | | | 75 | | | | | |
| | NF63-SV,NF63-HV | 4P | – | – | | | | 23 | | | | |
| | NF125-CV, NF125-SV | 3P | NV125-CV, NV125-SV,<br>NV125-HV | 3P | | | 86 | – | | | | |
| | NF125-HV | 2P, 3P | – | – | | | | | | | | |
| | NF125-SV, NF125-HV | 4P | NV125-SV, NV125-HV | 4P | | | | 28 | | | | |
| | NF125-UV | 2P, 3P | – | – | 62.5 | | | – | | 1.5 | | |
| | | 4P | – | – | | | | 28 | | | | |
| HLS-2SV (*1) | NF125-SGV/LGV/HGV/RGV<br>NF160-SGV/LGV/HGV<br>NF250-CV, NF250-SV, NF250-HV<br>NF250-SGV/LGV/HGV/RGV | 2P | NV125-SEV, NV125-HEV<br>NV250-CV, NV250-SV,<br>NV250-HV<br>NV250-SEV, NV250-HEV | 3P | 32 | 84 | 100 | – | | 32 | | |
| | NF125-SEV, NF125-HEV<br>NF125-SGV/LGV/HGV/RGV<br>NF160-SGV/LGV/HGV<br>NF250-CV, NF250-SV, NF250-HV<br>NF250-SEV, NF250-HEV<br>NF250-SGV/LGV/HGV/RGV | 3P | | | | | | | | | | |
| | NF125-SEV, NF125-HEV<br>NF125-SGV/LGV/HGV/RGV<br>NF160-SGV/LGV/HGV<br>NF250-SV, NF250-HV, NF250-SEV, NF250-HEV<br>NF250-SGV/LGV/HGV/RGV | 4P | NV125-SEV, NV125-HEV<br>NV250-SV, NV250-SEV,<br>NV250-HEV | 4P | | | | 33 | | | | |
| | NF250-UV | 2P, 3P | – | – | 69.5 | | | – | | -5.5 | | |
| | | 4P | – | – | | | | 33 | | | | |
| HLS-03SVU (*1) | NF50-SVFU | 2P, 3P | NV50-SVFU | 2P, 3P | – | – | – | – | | 32 | Fig. 9 | |
| HLS-05SVU2 (*1) | NF100-CVFU | 2P | – | – | 32 | 75 | 50 | – | | | Fig. 5 | |
| HLS-05SVU (*1) | NF100-CVFU | 3P | NV100-CVFU | 3P | | | 75 | | | | | |
| | NF125-SVU/HVU | 2P, 3P | NV125-SVU/HVU | 3P | | | 86 | | | | | |
| HLS-05SVU (*2) | NF125-SVU/HVU | 2P, 3P | NV125-SVU/HVU | 3P | 32 | 75 | 86 | – | | 32 | Fig. 5 | |
| HLS-2SVU (*1) | NF250-SVU/HVU | 3P | NV250-SVU/HVU | 3P | | 84 | 100 | | | | | |
| HLS-2SWU (*1) | NF225-CWU | 3P | – | 3P | | 84 | 100 | – | | 32 | Fig. 6 | |
| HLS-4SW (*3) | NF400-CW/SW/SEW/HEW/REW<br>NF630-CW/SW/SEW/HEW/REW | 2P, 3P, 4P | NV400-CW/SW/SEW/<br>HEW/REW<br>NV630-CW/SW/SEW/<br>HEW | 3P, 4P | – | – | – | – | – | – | Fig. 7 | |
| HLS-4UW (*3) | NF400-UEW | 3P | – | – | – | – | – | – | – | – | | |
| HLS-8SW (*3) | NF800-CEW/SDW/SEW/HEW/REW | 2P, 3P, 4P | NV800-SEW/HEW | 3P, 4P | – | – | – | – | – | – | Fig. 8 | |
| HLS-8UW (*3) | NF400-UEW | 4P | – | – | – | – | – | – | – | – | | |
| | NF800-UEW | 3P, 4P | | | | | | | | | | |

Notes *1 For locking in OFF position
*2 A, B, C and D in Figs. 5 and 6 are drilling sizes in front plate.
*3 Terminal covers cannot be fitted.

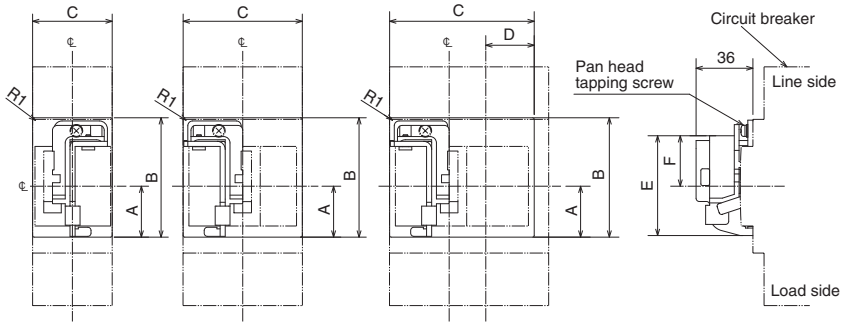


Fig. 5

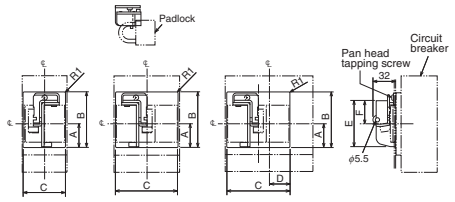


Fig. 6

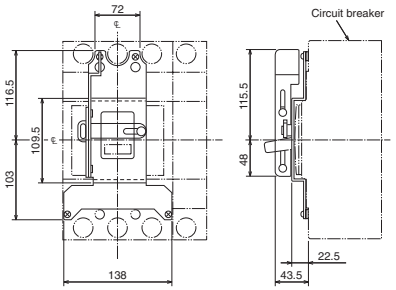


Fig. 7

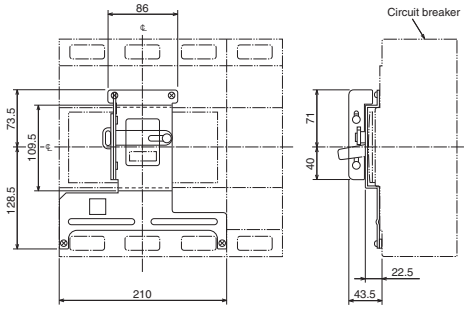


Fig. 8

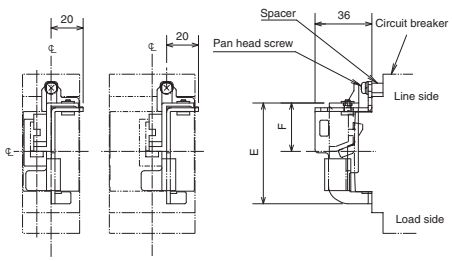


Fig. 9

## (2) Lock Covers (LC)

Lock Cover is a plug-in lock for indicating easily without using padlocks that it is prohibited to operate the circuit breaker.
A "Caution" tag can be hung on it.
The covers are red resin moldings.

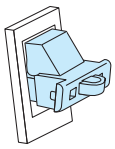

LC-05SW to LC-2SW

LCBH1

LCBH2, 3

### Table 6-35 LC

| Type name | Applicable model | |
|---|---|---|
| | MCCB | ELCB |
| LC03CS | NF30-CS | – |
| LC-05SV | NF32-SV<br>NF63-CV/SV/HV<br>NF125-CV/SV/HV/UV<br>NF125-SEV/HEV<br>NF125-SGV/LGV/HGV/RGV<br>NF160-SGV/LGV/HGV<br>NF250-CV/SV/HV/UV<br>NF250-SEV/HEV<br>NF250-SGV/LGV/HGV/RGV | NV32-SV<br>NV63-CV/SV/HV<br>NV125-CV/SV/HV<br>NV125-SEV/HEV<br>NV250-CV/SV/HV<br>NV250-SEV/HEV |
| LCBH1R (red)<br>LCBH1Y (yellow) | BH-P(1P) | – |
| LCBH2R (red)<br>LCBH2Y (yellow) | BH-P(2P) | – |
| LCBH3R (red)<br>LCBH3Y (yellow) | BH-P(3P) | – |

Remark: 1. One lot of LCBH, LCBL and LCNVL contains 50 pieces, and one lot of other models contains 10 pieces.

## (3) Auxiliary Handles (HT)

These handles facilitate opening and closing circuit breakers.

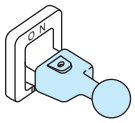

Auxiliary Handles

### Table 6-36 HT

| Type name | Applicable model | Dimensions | | | | | Outline dimension drawing |
|---|---|---|---|---|---|---|---|
| | | A | B | C | D | E | |
| HT-4CW (*1) | NF400-CW, NV400-CW | 59 | 77.5 | 32 | 38 | M4 | 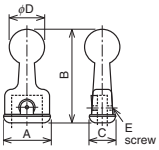 |
| HT-4SW (*1) (*2) | NF400-SW/SEW/HEW/REW/UEW<br>NF630-CW/SW/SEW/HEW/REW<br>NF800-CEW/SDW/SEW/HEW<br>NF800-REW/UEW<br>NV400-SW/SEW/HEW/REW<br>NV630-CW/SW/SEW/HEW<br>NV800-SEW/HEW | | 81 | | | | |
| HT-10SW | NF1000-SEW<br>NF1250-SEW/SDW<br>NF1600-SEW/SDW | 62 | 118 | 34 | 45 | M4 | |

Notes *1 HT can be supplied separately. The user can fit it to the circuit breaker. (One lot contains 1 piece.)
*2 1-pole circuit breakers with 800A frame and 4-pole NF400-UEW come with auxiliary handles as standard accessories.

## (4) Card Holders (CH)

Cards showing the circuit breaker name and circuit number can be inserted to the card holder.
Fit the card holder to the circuit breaker body or the flush plate in the flush frame. (Although a card holder is supplied with each circuit breaker body, the card holder is available as an optional part.)

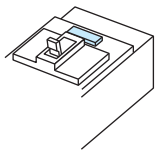

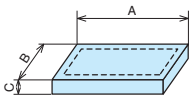


### Table 6-37 Card holder size (mm)

| Applicable model | Type name | A | B | C | Card size |
|---|---|---|---|---|---|
| NF250-SV or below<br>NV250-SV or below | CH-P No.5 | 44 | 12 | 5 | 39×9 |
| NF400-SW or above<br>NV400-SW or above | CH-P No.3 | 38 | 22 | 5 | 33×20 |

# 6. Mechanical Interlocks (MI)

This mechanical interlock device is used to enable one of two circuit breakers to turn on. Install the device on the panel.
Mechanical interlocks to be installed directly to circuit breaker bodies can be manufactured.
Consult us for details.

## ●Front, rear and plug-in types

**Front, rear and plug-in types (Panel mounting)**
**These interlocks can be locked with padlocks.**

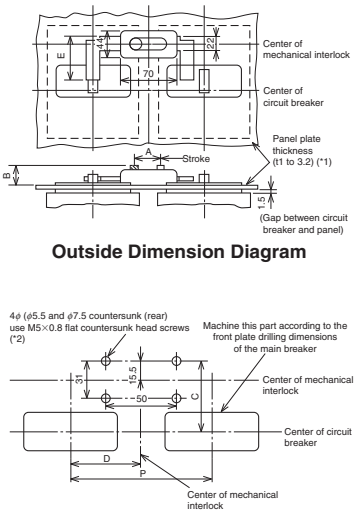


Fig. 1

**Front, rear and plug-in types (Panel mounting)**

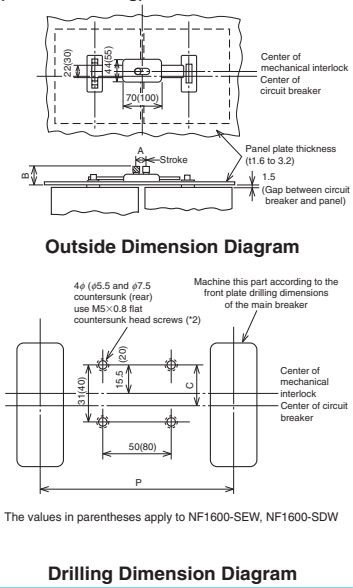


Fig. 2

**Breaker mountiong (front)**

Terminal covers cannot be fitted.

| Type name | J |
|---|---|
| MI-05SVFB2 | 47.5 |
| MI-1SVFB2 | 45 |

| Type name | F | G | H |
|---|---|---|---|
| MI-05SVFB3 | 25 | 111 | 61 |
| MI-05SWHFB3 | 25 | 111 | 75 |
| MI-1SVFB3 | 30 | 111 | 61 |
| MI-2SVFB3 | 35 | 126 | 61 |

| Type name | F | G | P |
|---|---|---|---|
| MI-4SWFB3 | 44 | 194 | 190 |
| MI-8SWFB3 | 70 | 243 | 260 |

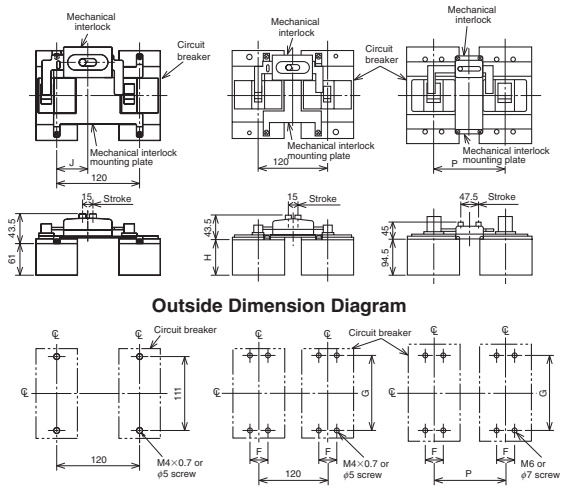


Fig. 3

Notes *1 For 400A frame or above, use a panel 1.6 to 3.2 thick.
*2 When the panel is 2.3 or more thick, countersink the panel (rear side) in ϕ9.5 for the four ϕ5.5 holes.

### Table 6-38 Table of variable dimensions

| Applicable model | | Pitch (P) (*1) | | | | | | | Dimensions (mm) | | | | | | Reference diagram | Breaker mount (*4) | Reference diagram (3P) |
|---|---|---|---|---|---|---|---|---|---|---|---|---|---|---|---|---|---|
| MCCB | ELCB (*8) | Standard | | | Semi-standard | | Standard | | t | A | B | C (*3) | D | E | | Type name 2P•3P | |
| | | Type name | 2P | 3P | 3P | | Type name | 4P | | | | | | | | | |
| NF32-SV, NF63-CV/SV/HV | – | MI-05SV3 | 120 | – | – | – | – | – | (*2) – | 15 | 33 | 63 | 47.5 | 58 | (Fig. 1) | MI-05SVFB2 | (Fig. 3) |
| NF32-SV, NF63-CV/SV/HV | NV32-SV, NV63-CV/SV/HV | | – | 120 | – | 130 | MI-05SV4 | 120 (*6) | | 15 | 33 | 63 | – | 58 | | MI-05SVFB3 | |
| NF125-CV/SV | – | MI-05SV3 | 120 | – | – | – | – | – | | 15 | 33 | 63 | 45 | 58 | | MI-1SVFB2 | |
| NF125-CV/SV/HV | NV125-CV/SV/HV | | – | 120 | 130 | 150 | MI-1SV4 | 130 (*6) | | 15 | 33 | 63 | – | 58 | | MI-1SVFB3 | |
| NF125-UV | – | | | | | | | | | 15 | 33 | 32.5 | | 58 | | – | – |
| NF125-SEV/HEV<br>NF125-SGV/LGV/HGV/RGV<br>NF160-SGV/LGV/HGV<br>NF250-CV/SV/HV,<br>NF250-SEV/HEV<br>NF250-SGV/LGV/HGV/RGV | NV125-SEV/HEV<br>NV250-CV/SV/HV<br>NV250-SEV/HEV | MI-05SV3 | 120 (*6) | | 150 | 180 | MI-2SV4 | 150 (*6) | | 15 | 33 | 63 | – | 58 | | MI-2SVFB3 | (Fig. 3) |
| NF250-UV | – | | | | | | | | | | | 25.5 | | | | – | – |
| NF225-CWU | – | MI-05SWU3 | – | 120 (*6) | – | – | – | – | | 15 | 33 | 63 | – | 58 | | – | – |
| NF400-CW/SW/SEW/HEW/REW<br>NF630-CW/SW/SEW/HEW/REW<br>NF-SKW | NV400-CW/SW/SEW/HEW/REW<br>NV630-CW/SW/SEW/HEW | MI-4SW3 | 190 | | – | 210 (*5) | MI-4SW4 (*5) | 250 | (*2) – | 47.5 | 33 | 83.5 | – | 74 | | MI-4SWFB3 (*5) | (Fig. 3) |
| NF400-UEW (3P) | – | | – | 190 | | | – | – | | | | 83.5 | | | | – | |
| NF800-CEW/SDW/SEW/HEW/REW<br>NF-SLW | NV800-SEW/HEW | MI-8SW3 | 220 | | – | 240 (*5) | MI-8SW4 (*5) | 290 | | 47.5 | 33 | 83.5 | – | 74 | | MI-8SWFB3 (*5) | |
| NF400-UEW (4P)<br>NF800-UEW | – | | – | 220 | | | | | | | | 60 | | | | – | |
| NF1000-SEW, NF1250-SEW/SDW | – | MI-10SW3 | 220 | | – | – | MI-10SW4 | 290 | 2.3 (*7) | 47.5 | 47 | 37.5 | – | – | (Fig. 2) | – | – |
| NF1600-SEW/SDW | – | MI-16SW3 | 315 | | – | – | MI-16SW4 | 426 | | 65 | 54.5 | 39 | – | – | | – | |

Notes *1 Specify the circuit breaker mounting pitch (P).
*2 No need to specify the panel thickness (t). (Usable panel thickness range: t = 1~3.2mm. Above 400AF, use panel thickness t = 1.6~3.2mm)
*3 For isolation purposes with 400, 600, 630 or 800A frame NF-SKW/SLW or NV-SKW, keep the C dimension deviation within ±1 mm.
*4 Terminal covers cannot be fitted. (However, TCL-4SW3 can be fitted.)
*5 Not UL 489 listed product.
*6 When UVT is provided, separately install the module.
*7 If the thickness is not 2.3, specify the panel thickness (t).
*8 For NV with TBL, use a circuit breaker with MG.

Remarks 1. When a mechanical interlock is installed on the panel, screw type terminal covers cannot be installed.
2. These devices do not provide an isolation function. However, 400, 600, 630 and 800A frame circuit breakers can be made conforming to it. (See Note 3.)
3. On a 2-pole circuit breaker obtained by removing the neutral pole conductor from a 3-pole circuit breaker, the mechanical interlock can be installed in the same manner as on a 3-pole circuit breaker.

# 7. Boxes for Circuit Breakers and Boxed Circuit Breakers

## (1) Kinds and specifications

**Table 6-39**

| | | | Closed type (S) | | Dust-proof type (I) | Water-proof type (W) |
|---|---|---|---|---|---|---|
| Appearance | | | (*1) | (*1) | | |
| MCCB (*2) | NF30-CS | 2, 3P | NFS-03CS | – | – | – |
| | NF32-SV, NF63-CV/SV/HV | 2P | NFS-05SV2 (*5) | – | NFI-05SV | – |
| | | 3P | NFS-05SV | | | NFW-05SV |
| | NF125-CV/SV | 2P | NFS-1SV2 (*5) | – | NFI-1SV | – |
| | | 3P | NFS-1SV | | | NFW-1SV |
| | NF125-HV | 2, 3P | | | | NFW-1HV |
| | NF125-SGV/LGV<br>NF160-SGV/LGV<br>NF250-SGV/LGV<br>NF250-CV/SV, NF125/250-SEV | 2, 3P | NFS-2SV | – | NFI-2SV | NFW-2SV |
| | NF125/160/250-HGV<br>NF250-HV, NF125/250-HEV | | – | | | |
| | NF400-CW | | – | – | NFI-4CW | NFW-4CW |
| | NF400-SW/SEW | | – | – | NFI-4SW | NFW-4SW |
| | NF630-CW/SW/SEW | | – | – | NFI-6SW | NFW-6SW |
| | NF800-CEW/SDW/SEW | | – | – | NFI-8SW | NFW-8SW |
| ELCB (*2) | NV32-SV, NV63-CV/SV/HV | 2P | NFS-05SV | – | NFI-05SV | – |
| | | 3P | NFS-05SV | | | NFW-05SV |
| | NV125-CV/SV | 3P | NFS-1SV | – | NFI-1SV | NFW-1SV |
| | NV125-HV | | NFS-1SV | | | NFW-1HV |
| | NV250-CV/SV, NV125/250-SEV | | NFS-2SV | – | NFI-2SV | NFW-2SV |
| | NV250-HV, NV125/250-HEV | | – | | | |
| | NV400-CW | | – | – | NFI-4CW | NFW-4CW |
| | NV400-SW/SEW | | – | – | NFI-4SW | NFW-4SW |
| | NV630-CW/SW/SEW | | – | – | NFI-6SW | NFW-6SW |
| | NV800-SEW | | – | – | NFI-8SW | NFW-8SW |
| Operating method | | | Direct operation of circuit breaker handle | | Operation through operating handle mechanism | |
| Standard paint color | | | Box: Munsell 5Y7/1 Operating handle: Munsell N1.5 | | | |
| Protection class (IEC 60529) | | | IP3X | | IP4X (*3) | IP65 (*4) |

Notes *1 The window frame varies depending on the model.
*2 For 1-pole circuit breakers, boxes are not manufactured.
*3 The protection class of NFI-1SV and NFI-2SV is IP3X.
*4 The protection class of NFW-4CW, NFW-4SW, NFW-6SW and NFW-8SW is IP54.
*5 The circuit breaker body is a 2-pole external type.

Remarks: 1. Only internal accessories with lead wires drawn out can be fitted. (However, LT and SLT can be fitted on the right pole side.)
2. The dust-proof type (I) models do not provide an isolation function.

### ●Selection of rated current

When selecting the rated current of circuit breaker, it is necessary to consider the temperature in the box. When the rated current is carried, the temperature in the box increases by 10 to 20K. Correct the rated current with the temperature correction curve.
Determine the maximum working current to be 80% or less of the rated current.

### ●Locking

Type I and W boxed circuit breakers can be provided with locks in the following parts. Locking can prevent unnecessary operation.
①Cover and case
②ON or OFF position of operating handle
(Padlocks must be prepared by the user. The dimensions of the padlocks are shown on page 116.)

### ●Interlock (only for Dust-proof type)

The cover cannot be opened while the circuit breaker is in the ON state. However, if the interlock release screw is turned, the cover is released from the locked state and can be opened even in the ON state.

### ●Handle operation and display

The ON, OFF or trip state of the body is displayed on each position on the decorative board.

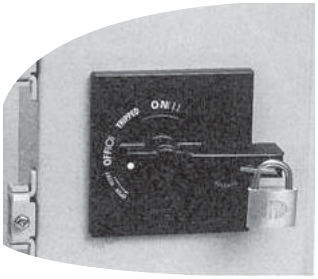


Example of Type I operating handle block

## (2) External dimensions

### ■MCCB

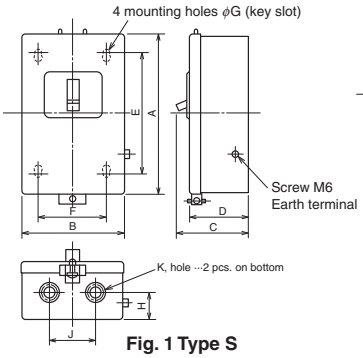


Fig. 1 Type S

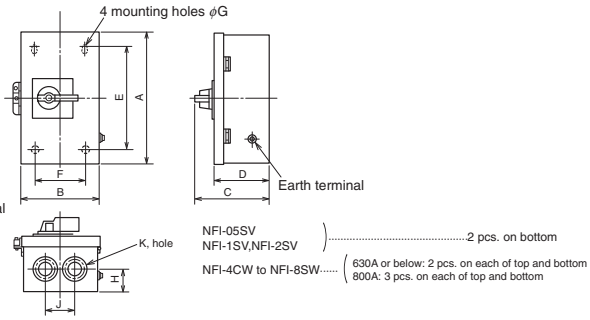


Fig. 3 Type I

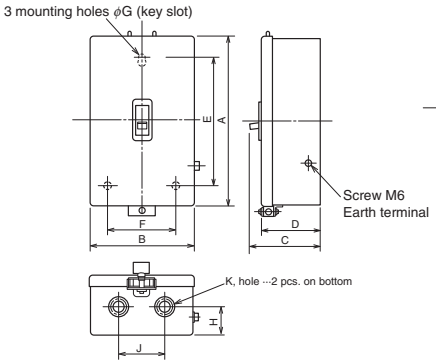


Fig. 2 Type S

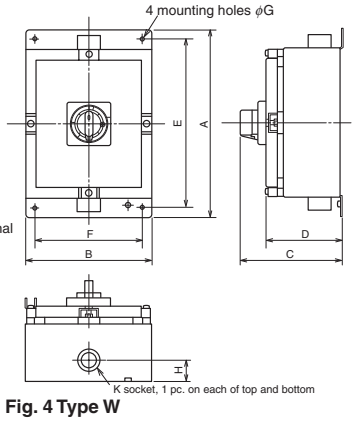


Fig. 4 Type W

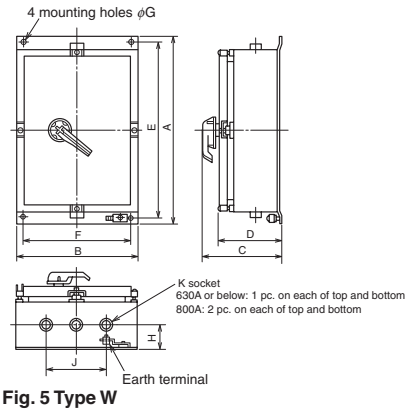


Fig. 5 Type W

**Table 6-40** Table of variable dimensions (Boxes for 4-pole circuit breakers are not manufactured.)

Note) The sockets are applicable to thick steel duct (JIS C 8305) and conduit tube thread.

| Box type | Type name | Applicable Model | Variable dimensions | | | | | | | | | | |
|---|---|---|---|---|---|---|---|---|---|---|---|---|---|
| | | | Fig. | A | B | C | D | E | F | G | H | J | K |
| S | NFS-03CS | NF30-CS | 2 | 188 | 158 | 69 | 58 | 150 | 78 | 6 | 25 | 100 | 20, 28 |
| | NFS-05SV2 | NF32-SV, NF63-CV/SV/HV | 1 | 260 | 178 | 98 | 78 | 202 | 100 | 7 | 34 | 100 | 28, 35, 44 |
| | NFS-05SV | | | | | | | | | | | | |
| | NFS-1SV2 | NF125-CV/SV | 1 | 310 | 178 | 98 | 78 | 252 | 100 | 7 | 34 | 100 | 28, 35, 44 |
| | NFS-1SV | NF125-CV/SV/HV | | | | | | | | | | | |
| | NFS-2SV | NF250-CV/SV, NF125/250-SEV<br>NF125-SGV/LGV<br>NF160-SGV/LGV<br>NF250-SGV/LGV | 1 | 440 | 247 | 137 | 116 | 373 | 170 | 9 | 52 | 120 | 50, 62, 78 |
| I | NFI-05SV | NF32-SV, NF63-CV/SV/HV | 3 | 350 | 186 | 155.5 | 117 | 286 | 120 | 7 | 42 | 100 | 28, 35, 44 |
| | NFI-1SV | NF125-CV/SV/HV | 3 | 352 | 188 | 155.5 | 118 | 286 | 120 | 7 | 42 | 100 | 28, 35, 44 |
| | NFI-2SV | NF250-CV/SV/HV, NF125/250-SEV/HEV<br>NF125-SGV/LGV/HGV<br>NF160-SGV/LGV/HGV<br>NF250-SGV/LGV/HGV | 3 | 442 | 248 | 162 | 124 | 373 | 170 | 9 | 54 | 120 | 50, 62, 78 |
| | NFI-4CW | NF400-CW | 3 | 730 | 320 | 244 | 191 | 650 | 240 | 11 | 87 | 120 | 50, 62, 78 |
| | NFI-4SW | NF400-SW/SEW | 3 | 730 | 320 | 244 | 191 | 650 | 240 | 11 | 65 | 120 | 50, 62, 78 |
| | NFI-6SW | NF630-CW/SW/SEW | 3 | 940 | 433 | 260 | 207 | 856 | 350 | 15 | 90 | 150 | 92 |
| | NFI-8SW | NF800-CEW/SDW/SEW | 3 | 1353 | 543 | 304 | 251 | 1270 | 460 | 15 | 90 | 320 | 104 |
| W | NFW-05SV | NF32-SV, NF63-CV/SV/HV | 4 | 390 | 265 | 214 | 160 | 350 | 225 | 9.5 | 45 | – | 28 |
| | NFW-1SV | NF125-CV/SV | 4 | 390 | 265 | 214 | 160 | 350 | 225 | 9.5 | 50 | – | 36 |
| | NFW-1HV | NF125-HV | 4 | 480 | 265 | 239 | 186 | 440 | 225 | 9.5 | 60 | – | 36 |
| | NFW-2SV | NF250-CV/SV/HV, NF125/250-SEV/HEV<br>NF125-SGV/LGV/HGV<br>NF160-SGV/LGV/HGV<br>NF250-SGV/LGV/HGV | 4 | 550 | 355 | 264 | 210 | 510 | 315 | 11 | 75 | – | 54 |
| | NFW-4CW | NF400-CW | 5 | 800 | 355 | 257 | 220 | 760 | 315 | 11 | 85 | – | 70 |
| | NFW-4SW | NF400-SW/SEW | 5 | 800 | 355 | 257 | 220 | 760 | 315 | 11 | 85 | – | 70 |
| | NFW-6SW | NF630-CW/SW/SEW | 5 | 800 | 355 | 257 | 220 | 760 | 315 | 11 | 85 | – | 82 |
| | NFW-8SW | NF800-CEW/SDW/SEW | 5 | 1435 | 550 | 339 | 265 | 1395 | 515 | 15 | 100 | 180 | 104 |

## ■ELCB

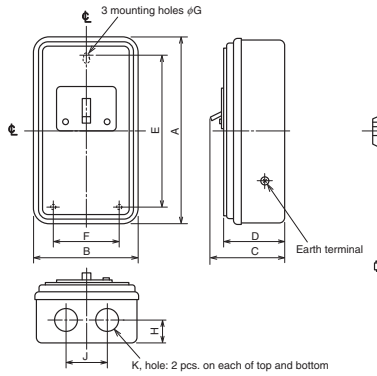


Fig. 1 Type S

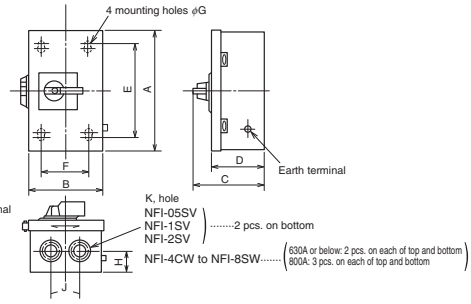


Fig. 3 Type I

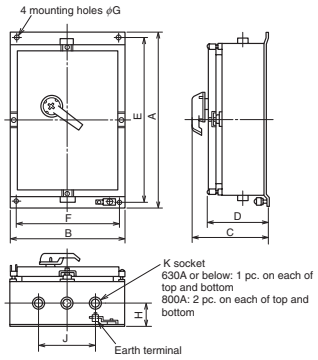


Fig. 5 Type W

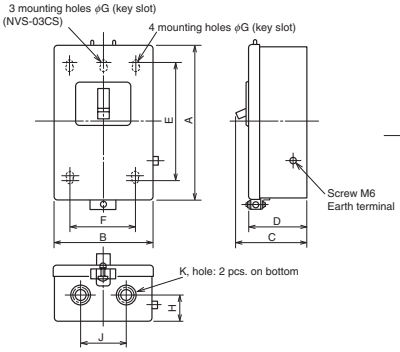


Fig. 2 Type S

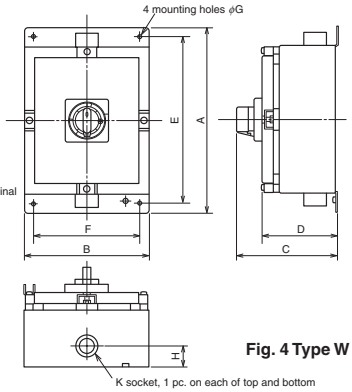


Fig. 4 Type W

**Table 6-41** Table of variable dimensions (Boxes for 4-pole circuit breakers are not manufactured.)

Note) The sockets are applicable to thick steel duct (JIS C 8305) and conduit tube thread.

| Box type | Type name | Applicable Model | Variable dimensions | | | | | | | | | | |
|---|---|---|---|---|---|---|---|---|---|---|---|---|---|
| | | | Fig. | A | B | C | D | E | F | G | H | J | K |
| S | NFS-05SV2 | NV32-SV, NV63-CV/SV/HV | 2 | 260 | 178 | 98 | 78 | 202 | 100 | 7 | 34 | 100 | 28, 35, 44 |
| | NFS-05SV | | | | | | | | | | | | |
| | NFS-1SV2 | NV125-CV/SV | 2 | 310 | 178 | 98 | 78 | 252 | 100 | 7 | 34 | 100 | 28, 35, 44 |
| | NFS-1SV | NV125-CV/SV/HV | | | | | | | | | | | |
| | NFS-2SV | NV250-CV/SV, NV125/250-SEV | 2 | 440 | 247 | 137 | 116 | 373 | 170 | 9 | 52 | 120 | 50, 62, 78 |
| I | NFI-05SV | NV32-SV, NV63-CV/SV/HV | 3 | 350 | 186 | 155.5 | 117 | 286 | 120 | 7 | 42 | 100 | 28, 35, 44 |
| | NFI-1SV | NV125-CV/SV/HV | 3 | 352 | 188 | 155.5 | 118 | 286 | 120 | 7 | 42 | 100 | 28, 35, 44 |
| | NFI-2SV | NV250-CV/SV/HV, NV125/250-SEV/HEV | 3 | 442 | 248 | 162 | 124 | 373 | 170 | 9 | 54 | 120 | 50, 62, 78 |
| | NFI-4CW | NV400-CW | 3 | 730 | 320 | 244 | 191 | 650 | 240 | 11 | 87 | 120 | 50, 62, 78 |
| | NFI-4SW | NV400-SW/SEW | 3 | 730 | 320 | 244 | 191 | 650 | 240 | 11 | 65 | 120 | 50, 62, 78 |
| | NFI-6SW | NV630-CW/SW/SEW | 2 | 940 | 433 | 260 | 207 | 856 | 350 | 15 | 90 | 150 | 92 |
| | NFI-8SW | NV800-SEW | 3 | 1353 | 543 | 304 | 251 | 1270 | 460 | 15 | 90 | 320 | 104 |
| W | NFW-05SV | NV32-SV, NV63-CV/SV/HV | 4 | 390 | 265 | 214 | 160 | 350 | 225 | 9.5 | 45 | – | 28 |
| | NFW-1SV | NV125-CV/SV | 4 | 390 | 265 | 214 | 160 | 350 | 225 | 9.5 | 50 | – | 36 |
| | NFW-1HV | NV125-HV | 4 | 480 | 265 | 239 | 186 | 440 | 225 | 9.5 | 60 | – | 36 |
| | NFW-2SV | NV250-CV/SV/HV, NV125/250-SEV/HEV | 4 | 550 | 355 | 264 | 210 | 510 | 315 | 11 | 75 | – | 54 |
| | NFW-4CW | NV400-CW | 5 | 800 | 355 | 257 | 220 | 760 | 315 | 11 | 85 | – | 70 |
| | NFW-4SW | NV400-SW/SEW | 5 | 800 | 355 | 257 | 220 | 760 | 315 | 11 | 85 | – | 70 |
| | NFW-6SW | NV630-CW/SW/SEW | 5 | 800 | 355 | 257 | 220 | 760 | 315 | 11 | 85 | – | 82 |
| | NFW-8SW | NV800-SEW | 5 | 1435 | 550 | 339 | 265 | 1395 | 515 | 15 | 100 | 180 | 104 |

# 8. Electrical Operated Circuit Breakers and Electrical Operation Devices

Spring charge type (1)

Spring charge type (2)
Standard paint color: Munsell 5Y7/1

Motor-drive type (2)
Standard paint color: Munsell 5Y7/1

## (1) Specifications

### ●Electrically operated circuit breakers

**Table 6-42**

Specify the electrical operation device together with the circuit breaker body.

| Electrically operating method | | Spring charge type (1) | Spring charge type (2) | | Motor-drive type (2) | |
|---|---|---|---|---|---|---|
| MCCB | Class S, H and R | NF125-SV, NF125-HV<br>NF125-SEV, NF125-HEV<br>NF125-SGV/LGV/HGV/RGV<br>NF160-SGV/LGV/HGV<br>NF250-SV, NF250-HV<br>NF250-SEV, NF250-HEV<br>NF250-SGV/LGV/HGV/RGV<br>NF125-RV, NF250-RV | NF400-SW, NF400-SEW<br>NF400-HEW, NF400-REW<br>NF630-SW, NF630-SEW<br>NF630-HEW, NF630-REW<br>NF800-SDW, NF800-SEW<br>NF800-HEW, NF800-REW | NF1000-SEW<br>NF1250-SEW<br>NF1250-SDW<br>NF1600-SEW<br>NF1600-SDW | NF400-SW, NF400-SEW<br>NF400-HEW, NF400-REW<br>NF630-SW, NF630-SEW<br>NF630-HEW, NF630-REW<br>NF800-SDW, NF800-SEW<br>NF800-HEW, NF800-REW | NF1000-SEW<br>NF1250-SEW<br>NF1250-SDW<br>NF1600-SEW<br>NF1600-SDW |
| | Class C | NF125-CV<br>NF250-CV | NF400-CW<br>NF630-CW<br>NF800-CEW | – | NF400-CW<br>NF630-CW<br>NF800-CEW | – |
| | Class U | NF125-UV<br>NF250-UV | NF400-UEW<br>NF800-UEW | – | NF400-UEW<br>NF800-UEW | – |
| | Motor breakers | NF125-SV, NF250-SV | – | – | – | – |
| ELCB | Class S, H and R | NV125-SV, NV125-HV<br>NV125-SEV, NV125-HEV<br>NV250-SV, NV250-HV<br>NV250-SEV, NV250-HEV | NV400-SW, NV400-SEW<br>NV400-HEW, NV400-REW<br>NV630-SW, NV630-SEW<br>NV630-HEW, NF800-SEW<br>NV800-HEW | – | NV400-SW, NV400-SEW<br>NV400-HEW, NV400-REW<br>NV630-SW, NV630-SEW<br>NV630-HEW, NF800-SEW<br>NV800-HEW<br>(*3) | – |
| | Class C | NV125-CV<br>NV250-CV | NV400-CW<br>NV630-CW | – | NV400-CW(*3)<br>NV630-CW | – |
| | Motor breakers | NV125-SV, NV250-SV | – | – | – | – |
| Rated operating voltage (V)<br>(Allowable operating voltage range: 85 to 110%) | | Compatible with 100 to 240 V AC and 100 to 250 V DC<br>24 V DC, 48 to 60 V DC (*1) | DC100-110, AC100-110<br>AC200-220(DC125, AC240) | | DC100-110, AC100-110, AC200-220<br>(DC125, AC240) | |
| Operating current (Ams) Values in ( ): Starting current | DC 100/110V ON | 0.5 (1.5) | 8 | 10 | 3.0(8.0) | 5.0(13.5) |
| | DC 100/110V OFF | | 1.0 (3.0) | 1.0 (4.0) | | |
| | AC 100/110V ON | 0.6 (3.0) | 10 | 10 | 4.0(8.0) | 5.0(10.0) |
| | AC 100/110V OFF | | 1.0 (3.0) | 1.0 (3.0) | | |
| | AC 200/220V ON | 0.5 (2.5) | 8 | 8 | 2.0(4.5) | 3.5(7.0) |
| | AC 200/220V OFF | | 0.5 (1.5) | 0.5 (1.5) | | |
| Operating time | s ON | 0.05~0.1(*2) | 0.05 | 0.07 | 0.3 or less<br>(self-holding type) | |
| | s OFF | 0.6 or less (self-holding type) | 3 or less (self-holding type) | | | |
| | s Charge | 1.2 or less (self-holding type) | | | – | – |
| Required transformer capacity VA | | 150 | 700 | | 400 | 700 |
| Endurance voltage | | 1500V | 1500V | | | |

Notes *1 When the rated operating voltage is 24 V DC or 48 to 60 V DC, specify the voltage. If the voltage is not specified, the circuit breaker will be manufactured for 100 to 240 V AC and 100 to 250 V DC.
*2 For 24-V DC circuit breakers, the operating time at a voltage of 100% or more is shown.
*3 Models for special voltage (125 V DC or 240 V AC) are not provided with the test button.

Remarks 1. Flush plate type circuit breakers can be manufactured to order.
2. The models with voltage in parentheses are special voltage products.
3. For the spring charge type (1), use an ON-OFF operating switch for minute load.
4. For the spring charge type (1) with 3 poles, TC-S, TC-L, TTC, BTC and PTC can be used. For that with 4 poles, only TC-L can be used.
5. When the body of the spring charge type (1) breaker is an earth leakage alarm breaker, the reset button cannot be pressed. Provide such a circuit breaker with an external reset or automatic reset system (except for the electronic type).
6. When the body of the motor-drive type (2) or spring charge type (2) has internal accessories, they are normally provided with lead wire terminal blocks.
7. The types other than the spring charge type (1) do not provide an isolation function.
8. When placing an order for a CE marked product of the spring charge type (1) or spring charge type (2), specify the model name with CE.
9. The switching durability of electrically operated circuit breakers conforms to JIS.

### ●Electrical operation devices

The following models of Electrical Operation Devices are supplied also as separate devices. The user can install them to the circuit breaker body.
(Front connection, rear connection and plug-in types)
(When requiring a motor breaker or a CE marked product, place an order for it together with the circuit breaker body.)

**Table 6-43**

| Electrically operating method | Spring charge type (1) | |
|---|---|---|
| Applicable models / Rated operating voltage | NF125-CV<br>NF125-SV<br>NF125-HV | NV125-CV<br>NV125-SV<br>NV125-HV |
| Compactible to 100-240VAC/100-250VDC | MDSAD240-NF1SVJ | MDSAD240-NV1SVJ |
| 24VDC | MDSD024-NF1SVJ | MDSD024-NV1SVJ |
| 48-60VDC | MDSD060-NF1SVJ | MDSD060-NV1SVJ |

## ●Cautions

- All electrical operations are based on intermittent rating. Avoid operating any device continuously 10 times or more (ON and OFF operations are counted as one time).
- Operate any device at 85 to 110% of the rated operating voltage.
- The dielectric strength of electrical operation circuits is 1500 V. When performing dielectric strength test of any of these devices and other devices, if the test voltage exceeds the rated value (1500 V), disconnect the operation power supply terminal.
- When collectively operating more than one electrical operation device, isolate the devices connecting a relay to each device.
  If the control terminals are directly connected in parallel, a circuit will be formed, and the devices may not normally function.

## ●Automatic reset (optional)

The automatic reset type has a built-in alarm switch in the circuit breaker and is connected in such a way that the OFF operation circuit is closed when the circuit breaker trips. Therefore, when the circuit breaker trips, it is automatically reset.
However, when the circuit breaker thermally trips, it may not be automatically reset.
If an automatic reset spring charge type (1) is required, the user must wire the device in accordance with the external connection diagram shown in Fig. 1 in (3).

## (2) Installation and connection (List of manufacturable)

**Table 6-44**

| Frame (A) \ Installation and connection method | Front connection type | Rear connection type | Plug-in type (*1) |
|---|---|---|---|
| 50~250 | ○ | ○ | ○ (*2) |
| 400~800 | ○ | ○ | ○ |
| 1000, 1250 | ○ | ○ | ○ |
| 1600 | ○ | ○ | – |

Notes *1 For ELCB, only 3-pole circuit breakers with a frame size of 125 to 400 A can be manufactured.
*2 In the case of 4-pole 125 A frame circuit breakers and U class, the circuit breakers are supplied as special models. Consult us for details.
Remarks: 1. All models of the front connection type are provided with bar terminals (except the spring charge type (1)).
2. 2-pole circuit breakers of all models are obtained by removing the neutral pole conductors from 3-pole circuit breakers.

## (3) Structure and operation

### ■Spring charge type (1)

#### ●Electrical operation

- When the ON operation switch is closed, the relay will operate, the motor will be driven, the latch mechanism will be released, and the closing spring force will instantaneously turn on the circuit breaker.
- When the OFF operation switch is closed, the relay will operate, the motor will be driven, the circuit breaker will be turned off (reset), and, at the same time, the closing spring will be charged.

Note: The charge may not be completed because the circuit protective function operates.

#### ●Manual operation

- After turning the MANUAL/AUTO selection switch on the cover upper surface to MANUAL, press the ON button, and the latch mechanism will be released, and the closing spring force will instantaneously turn on the circuit breaker.
- After turning the MANUAL/AUTO selection switch on the cover upper surface to MANUAL, draw out the manual handle, and move it upward and downward about 10 to 14 times. Then, the circuit breaker will be turned off (reset), and, at the same time, the closing spring will be charged. Although the circuit breaker can be turned off even if the switch is not turned to MANUAL, the selection switch should be set to MANUAL because remote operation may be accepted.
- After turning the changeover switch to MANUAL, draw out the OFF lock plate, and lock the circuit breaker in the OFF state with padlocks (to be prepared by the user). Up to three padlocks can be fitted.
  $\phi$5 to $\phi$8 padlocks can be fitted.

Note: After the completion of manual operation (on-site operation), return the selection switch to AUTO without fail. If it is not returned, electrical operation (remote operation) cannot be performed.

#### ●Display of tripping state

When the circuit breaker trips in the ON state, the tripping state is displayed. When it trips in the OFF state, the OFF state is kept displayed.
Note: When it trips in the OFF state, signals from AL will not be output.

#### ●Cautions for use

① To the ON or OFF operation switch (to be prepared by the user), current only of 24 V DC and 15 to 30 mA flows. Use a switch for minute load.
② Operate the operation switch for 0.1 s or more to turn on and for 20 ms or more to turn off. If it is operated for less than the time, it may not function.
The wire to the operation switch shall be less than 100 m.
③ The power supply module has a built-in switching power supply. Therefore, it may interfere with communication devices near the module. In such a case, install a noise filter on the input side.
④ For the automatic reset type, purchase a circuit breaker with alarm switch (for minute load), and connect the signal circuit (among the terminal numbers S1, S2 and S4) as shown in Fig. 1.

If the circuit breaker in the OFF state is tripped by UVT-N or the like, it cannot be automatically reset. To reset it, it is necessary to turn it on under no current. After this operation, it will be automatically reset.

Fig. 1

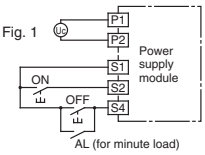


AL "a" (alarm switch for minute load)

**Operation circuit**

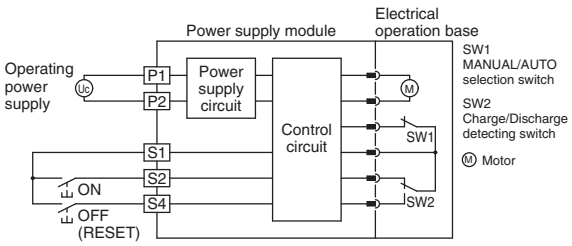


The circuit breaker is off, and the electrical operation device is in the charged state.

| Symbol | Interpretation of symbol |
|---|---|
| SW1 | MANUAL/AUTO selection switch |
| SW2 | Limit switch (For spring condition detection charge/discharge) |
| Ⓜ | Motor |

Note *1 When power is applied, inrush current (capacitor charging current) of 60 A flows to the breaker and fuse installed on the power supply circuit for 1 ms or so. When selecting the breaker and fuse, make sure that they will not cause problems, such as blowout and malfunction.

## ■Motor-drive type (2)

### ●Electrical operation

Forward and reverse motor rotation is changed by ball screw to switch the breaker ON and OFF (reset).

### ●Manual operation

The manual operation handle can be used to switch the breaker ON and OFF directly.

### ●Cautions for use

①In the case of a circuit breaker with UVT, if the circuit breaker trips owing to the operation of UVT, the procedure for re-closing the circuit breaker varies depending on the condition of the electrical operation device before the circuit breaker trips.
- Tripping in ON state: Reset (OFF). → Turn on.
- Tripping in OFF state: Turn on (idle tripping). → Reset (OFF). → Turn on.

(If the circuit breaker cannot be turned on (idle tripping), reset (OFF) it, and turn on.)
- When an automatic reset system is configured on a non-reset type circuit breaker with UVT, if UVT is set to the no-voltage state, the operations to turn off (reset), trip, turn off (reset) and trip are repeated.

Therefore, configure the circuit in such a way that power is disconnected from the electrical operation device before the circuit breaker is tripped by the non-reset type UVT.

②Current of about 0.2 A will flow to the ON-OFF switch. Use an appropriate switch.

③Do not apply ON and OFF operation signals continuously. An interval of 0.5 sec or more is necessary between ON and OFF signals.

④In the case of the automatic reset type device, it will perform the reset operation with an interval of 0.5 sec after NFB performs the tripping action.

⑤The electrical operation device has a built-in pumping preventing circuit. Therefore, it can operate to turn off the circuit breaker while the ON operation switch is held in the closing state, but it cannot turn on continuously after turning off. To turn on, once turn off the ON operation switch, and turn on the switch. Do not apply the ON operation signal continuously.

⑥The manual operating handle moves at a high speed during electrical operation. Pay attention to the handle. Keep the operation circuit power supply off during manual operation.

⑦In the manual operation, surely turn the manual operating handle to the position indicated on the nameplate.

### ●Operation circuit ···· For the automatic reset type, the connections indicated with the dashed lines are added.

●Operation circuit 1
[NF400-CW~NF800-UEW
NV400-CW~NV800-HEW]

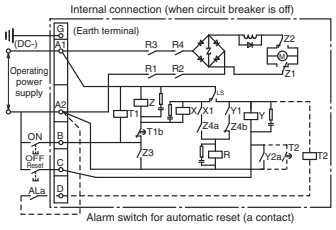


●Operation circuit 2
[NF1000-SEW~NF1600-SEW]

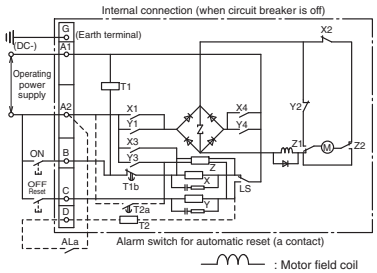


Ⓜ : Motor
X : Relay for ON operation
Y : Relay for OFF operation
R : Motor driving relay
Z : Polarity switching relay (Operation circuit 1 or 2)
(R1)~(R4): Relay switches

Z, K: Exciting coil of keep relay (Operation circuit 3)
LS, LS1, LS2: Limit switches
X1~X4, Y1~Y4, Y2a, Z4a, Z4b, Z1, Z2, Z3, K1, T1b, T2a: Relay switches
$T_1$ : Pumping preventing timer
$T_2$ : Timer for automatic reset

: Motor field coil
: Surge absorbing circuit
: Surge absorber

## ■Spring charge type (2)

### ●Electrical operation

When the ON operation switch is closed, the closing coil will be excited to release the latch mechanism, and the closing spring force will instantaneously turn on the circuit breaker. When the OFF operation switch is closed, the relay will operate to start the motor, turn off (reset) the circuit breaker and, at the same time, charge the closing spring.

### ●Manual operation

- Press the ON button, and the latch mechanism will be released, and the closing spring force will instantaneously turn on the circuit breaker.
- Turning off (resetting)
  Push the leaf spring, bring out the manual handle, and move the handle upward and downward more than ten times. Then, the circuit breaker will be turned off (reset), and, at the same time, the closing spring will be charged.

### ●Cautions for use

①In Before installing or removing the electrical operation device to or from the circuit breaker, trip the circuit breaker, and discharge the electrical operation device. After the device is installed to the circuit breaker, the device will not trip the circuit breaker in the OFF state even if the trip button is pressed. This is not a trouble.
The electrical operation device takes 3 seconds to turn off the circuit breaker. To open the circuit immediately by remote operation, use a circuit breaker with SHT or UVT.
- The device has a built-in pumping preventing relay.

②Current of about 9 A and 0.2 A will flow to the ON and OFF switches, respectively. Use appropriate switches.

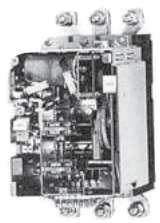

Internal structure of spring charge type

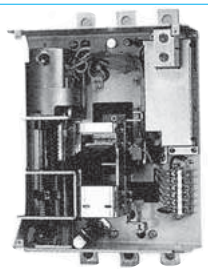

Internal structure of motor-drive type

### ●Operation circuit

For the automatic reset type, the connections indicated with the dashed lines are added.

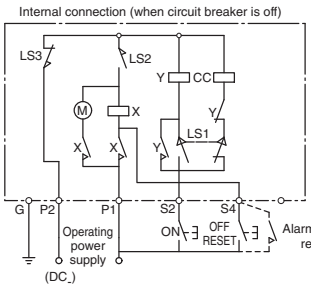


CC : Coil for making
Y : Relay for pumping prevention
X : Relay for self-sustaining on OFF side
LS1: Limit switch interlocking with cam
LS2: Limit switch interlocking with cam
LS3: Limit switch interlocking with OFF lock plate
M : Motor

# 9. Distribution Board Mounting Parts, Lock Covers and Handle Caps

## ●BPA-type mounting base (for BH-PS and HBH-P)

### Single-phase-type

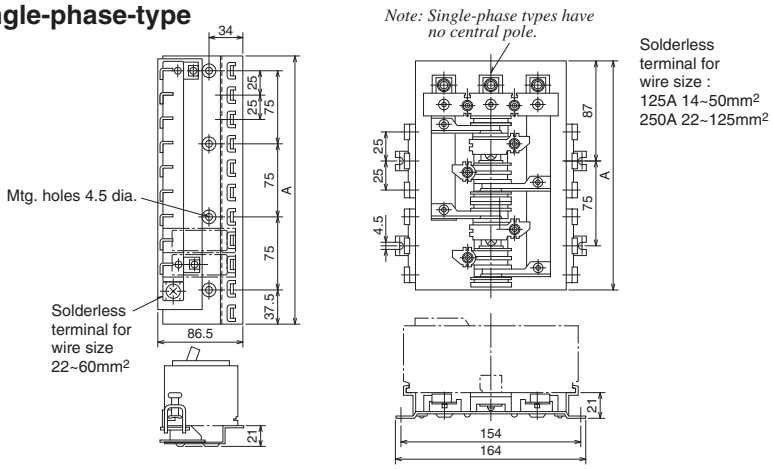


### Three-phase-type

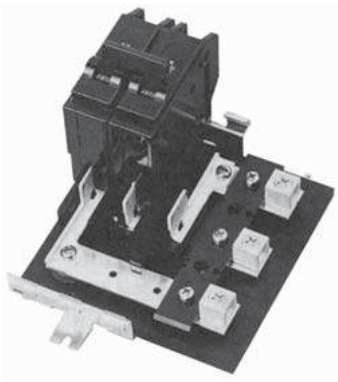

| Max. no. of ways | 1ph, 2w | 1ph, 3w | | 3ph, 4w | | Neutral terminal |
|---|---|---|---|---|---|---|
| | Main : 125A | Main : 125A | Main : 250A | Main : 125A | Main : 250A | |
| 6 | BPA-1106 | BPA-2106 | – | BPA-3106 | – | NT-06 |
| 9 | BPA-1109 | – | – | – | – | – |
| 12 | BPA-1112 | BPA-2112 | – | BPA-3112 | – | NT-12 |
| 15 | BPA-1115 | – | – | – | – | – |
| 18 | BPA-1118 | BPA-2118 | BPA-2218 | BPA-3118 | BPA-3218 | NT-18 |
| 24 | – | BPA-2124 | BPA-2224 | BPA-3124 | BPA-3224 | NT-24 |
| 30 | – | – | BPA-2230 | – | BPA-3230 | NT-30 |
| 36 | – | – | BPA-2236 | – | BPA-3236 | NT-36 |
| 42 | | | | | BPA-3242 | NT-42 |

## ●Mounting plate (for HBH and BH-S)

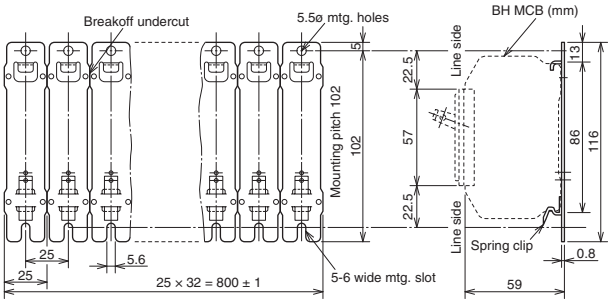


One mounting plate has 32 circuits.
One package includes 10 mounting plates (320 circuits).

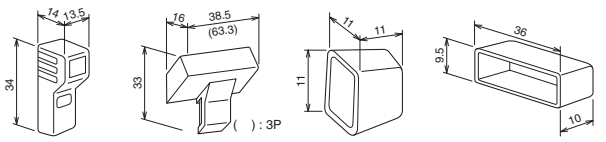


a) Lock cover for 1-pole units
b) Lock cover for 2-pole, 3-pole units
c) Handle cap for 1-pole units
d) Handle cap for 2-pole units

**Outlines and dimensions (mm)**

Colors available

| Fig. ref. | Item | Poles | Colors | | |
|---|---|---|---|---|---|
| | | | Red | Yellow | Green |
| a) | Lock cover | 1 | LCBH1R | LCVH1Y | – |
| b) | | 2 | LCBH2R | LCBH2Y | – |
| b) | | 3 | LCBH3R | LCBH3Y | – |
| c) | Cap | 1 | HC1R | HC1Y | HC1G |
| d) | | 2 | HC2R | HC2Y | HC2G |

## ●Lock covers and handle caps (for 1-pole, 2-pole and 3-pole types)

Many panelboards include some restricted-operation circuits, which must either normally remain on, such as all-night lighting or alarms, or must remain off, such as spare circuits, or circuits used in repair or construction work. Breakers for such circuits can be locked by simply installing a lock cover on the handle.

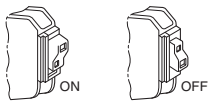


**Lock cover in place (1-pole unit)**

**Lock cover in place (2-pole unit)**

# 10. IEC 35-mm Rail Mounting Adapters

**Table 6-45**

| Type name | Number of poles of circuit breaker | Applicable model | | Fig. |
|---|---|---|---|---|
| | | MCCB | ELCB | |
| DIN-03CS | 2, 3 | NF30-CS | – | Fig. 1 |
| (Note1) DIN-05SV | 2, 3 | NF32-SV<br>NF63-CV/SV/HV | NV32-SV<br>NV63-CV/SV/HV | Fig. 2 |

Remark: 1. Place an order in units of 10 pieces.

## ●External dimension

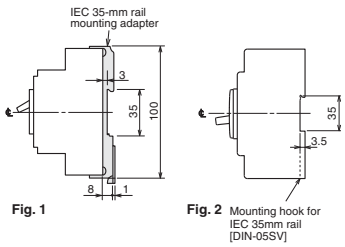


**Fig. 1**

**Fig. 2** Mounting hook for IEC 35mm rail [DIN-05SV]

# MEMO

# 7

# Characteristics and Dimensions


## 1 Molded Case Circuit Breakers 142

- NF30-CS ..... 142
- NF32-SV, NF63-CV/SV/HV ..... 144
- NF125-CV/SV/HV ..... 146
- NF125-UV ..... 148
- NF250-CV/SV/HV ..... 150
- NF250-UV ..... 152
- NF125-SGV/LGV/HGV/RGV, NF160-SGV/LGV/HGV, NF250-SGV/LGV/HGV/RGV ..... 154
- NF125-SEV/HEV, NF250-SEV/HEV ..... 156
- NF400-CW/SW ..... 158
- NF400-SEW/HEW/REW ..... 160
- NF400-UEW ..... 162
- NF630-CW/SW ..... 164
- NF630-SEW/HEW/REW ..... 166
- NF800-CEW/SEW/HEW/REW ..... 168
- NF800-SDW ..... 170
- NF800-UEW ..... 172
- NF1000-SEW, NF1250-SEW ..... 174
- NF1250-SDW ..... 176
- NF1600-SEW ..... 178
- NF1600-SDW ..... 180

## 2 Earth Leakage Circuit Breakers 182

- NV32-SV, NV-63CV/SV/HV ..... 182
- NV125-CV/SV/HV ..... 184
- NV250-CV/SV/HV ..... 186
- NV125-SEV/HEV, NV250-SEV/HEV ..... 188
- NV400-CW/SW ..... 190
- NV400-SEW/HEW/REW ..... 192
- NV630-CW/SW ..... 194
- NV630-SEW/HEW ..... 196
- NV800-SEW/HEW ..... 198

## 3 UL 489 Listed Circuit Breakers 200

- NF50-SVFU, NV50-SVFU ..... 200
- NF100-CVFU, NV100-CVFU ..... 202
- NF125-SVU/HVU, NV125-SVU/HVU ..... 204
- NF225-CWU ..... 206
- NF250-SVU/HVU, NV250-SVU/HVU ..... 208
- NF-SKW ..... 210
- NF-SLW ..... 212

## 4 Measuring Display Unit Breakers 214

- NF250-SEV/HEV with MDU ..... 214
- NF400-SEP/HEP with MDU ..... 216
- NF630-SEP/HEP with MDU, NF800-SEP/HEP with MDU ... 218

## 5 Miniature Circuit Breakers, Residual Current Circuit Breakers, Residual Current Circuit Breakers with Overcurrent Protection and Isolating Switch 220

- BH,BH-P ..... 220
- BH-S ..... 221
- BH-PS ..... 222
- BH-D6, BH-D10 ..... 223
- BH-DN ..... 224
- BV-D ..... 225
- BV-DN ..... 226
- KB-D ..... 227

## 6 Circuit Protectors 228

- CP30-BA ..... 228

## 7 Electrical Operated Cicuit Breakers 229

# NF30-CS

NF30-CS

| Model | | | | NF30-CS | |
|---|---|---|---|---|---|
| Rated current In (A) | | | | 3, 5, 10, 15, 20, 30 | |
| Number of poles | | | | 2 | 3 |
| Rated insulation voltage Ui (V) | | | | 500 | |
| Rated short-circuit breaking capacity (kA) | IEC 60947-2 (Icu/Ics) | AC | 690V | – | |
| | | | 500V | – | |
| | | | 415V | 1.5/1.5 | |
| | | | 380V | 1.5/1.5 | |
| | | | 240V | 2.5/2 | |
| Standard Attached Parts (Front connection) | | | | Mounting screw: M4×0.7×20 (2pcs) | |

## Operating Characteristics

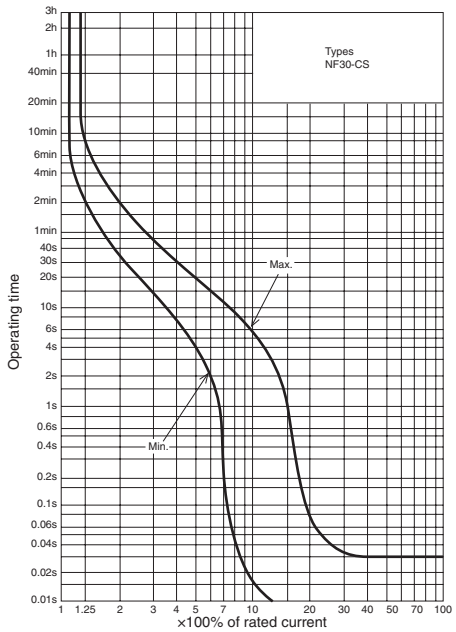


## Internal Accessories

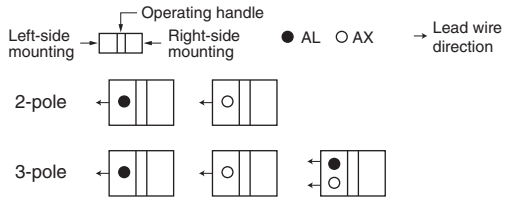


Remarks: 1. Standard lead wire is drawn from side. However, lead wire drawn by load can be produced upon request.
2. Refer to page 106.

## Temperature Characteristics Curve

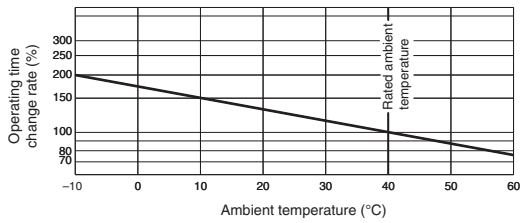


## External Accessories

| Accessories | | | Type name | Reference page |
|---|---|---|---|---|
| Terminal cover | Small | (TC-S) | TCS-03CS3W (*1) | 123 |
| | Large | (TC-L) | TCL-03CS3W (*1) | |
| | Rear | (BTC) | BTC-03CS3W (*1) | |
| | Skeleton | (TTC) | TTC-03CS (*1) | |
| Handle lock | | (HL) | HL-05FH | 129 |
| Lock cover | | (LC) | LC03CS | 130 |
| IEC 35mm rail mounting adapter | | (DIN) | DIN-03CS | 139 |

Note *1 The designation depends on the number of poles. Refer to the reference page.

## Outline Drawing

### Front connection

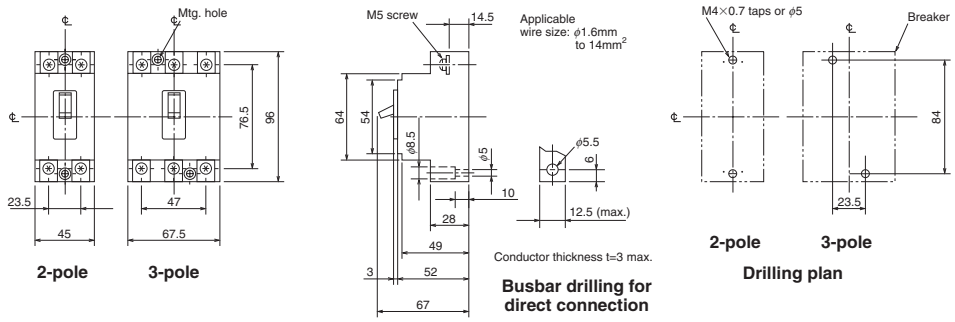


### Rear connection

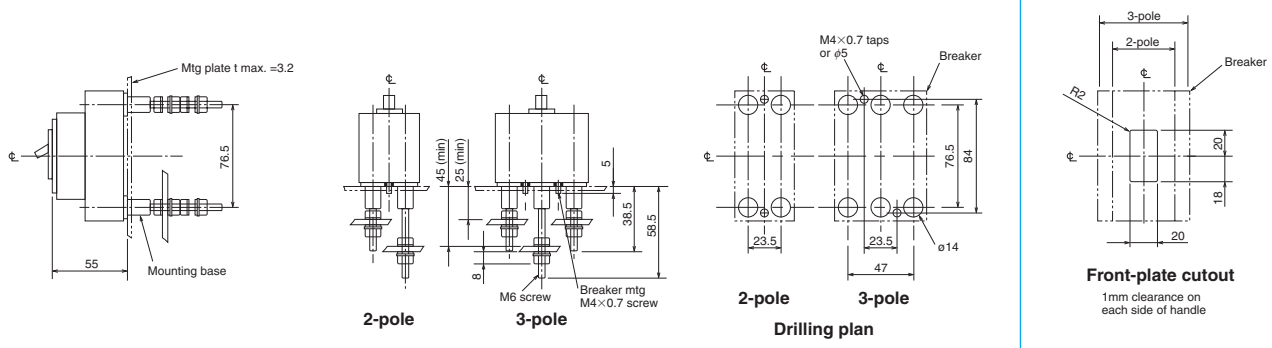


### IEC Rail Mounting Adapter

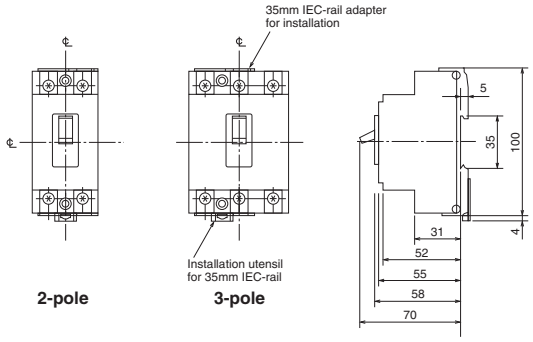

# NF32-SV
# NF63-CV
# NF63-SV
# NF63-HV

NF63-SV

| Model | | | | NF32-SV | | NF63-CV | | NF63-SV | | | NF63-HV | | |
|---|---|---|---|---|---|---|---|---|---|---|---|---|---|
| Rated current In (A) | | | | 3 4 (5) 6 10 (15) 16 20 25 (30) 32 | | 3 4 (5) 6 10 (15) 16 20 25 (30) 32 40 50 (60) 63 | | 3 4 (5) 6 10 (15) 16 20 25 (30) 32 40 50 (60) 63 | | | 10 (15) 16 20 25 (30) 32 40 50 (60) 63 | | |
| Number of poles | | | | 2 | 3 | 2 | 3 | 2 | 3 | 4 | 2 | 3 | 4 |
| Rated insulation voltage Ui (V) | | | | 600 | | 600 | | 600 | | | 690 | | |
| Rated short-circuit breaking capacity (kA) | IEC 60947-2 (Icu/Ics) | AC | 690V | – | | – | | – | | | 2.5/2.5 | | |
| | | | 500V | 2.5/2.5 | | 2.5/2.5 | | 7.5/7.5 | | | 7.5/7.5 | | |
| | | | 440V | 2.5/2.5 | | 2.5/2.5 | | 7.5/7.5 | | | 10/8 | | |
| | | | 415V | 2.5/2.5 | | 2.5/2.5 | | 7.5/7.5 | | | 10/8 | | |
| | | | 400V | 5/5 | | 5/5 | | 7.5/7.5 | | | 10/8 | | |
| | | | 380V | 5/5 | | 5/5 | | 7.5/7.5 | | | 10/8 | | |
| | | | 230V | 7.5/7.5 | | 7.5/7.5 | | 15/15 | | | 25/19 | | |
| | | DC | 250V (*1) | 2.5/2.5 | | 2.5/2.5 | | 7.5/7.5 | | | 7.5/7.5 | | |
| Standard attached parts (front connection) | | | | Mounting screw: M4×0.7×55 (2 and 3P: 2pcs, 4P: 4pcs)<br>Insulation barrier: (2P: 1pc, 3P: 2pcs, 4P: 3pcs) (*2) | | | | | | | | | |

Notes *1 Use two poles for three- and four-pole products. Not available for use with connection as shown at the bottom of page 14.
*2 Supplied with NF63-SV and NF63-HV.

## Operating Characteristics

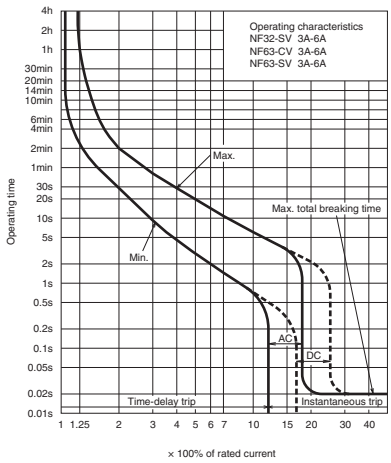


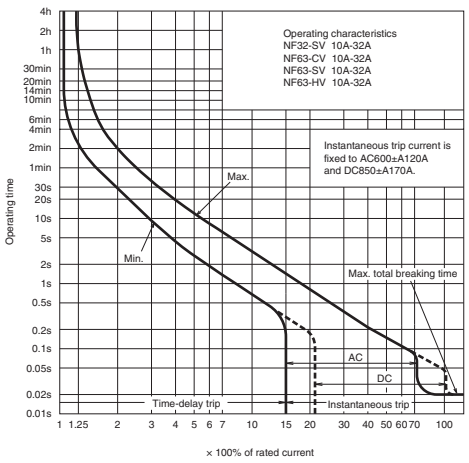


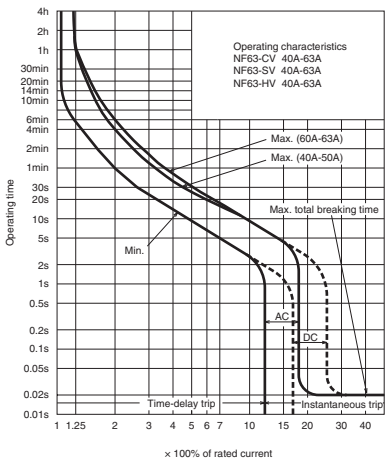


## Internal Accessories

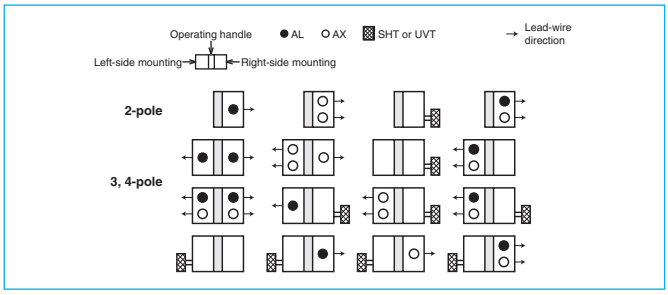


## Temperature Compensation Curve

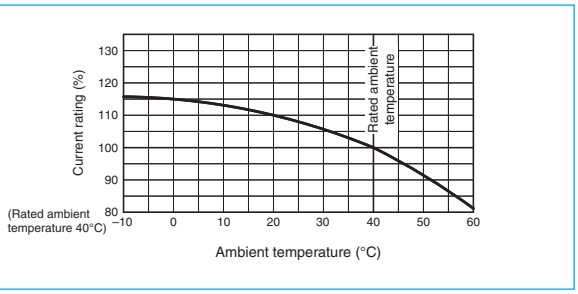


## External Accessories

| Accessories | | | Type name | Reference page |
|---|---|---|---|---|
| Operating handle | F | 2P | F-05SV2 | 119 |
| | | 3, 4P | F-05SV | |
| | V | 2P | V-05SV2 | 121 |
| | | 3, 4P | V-05SV | |
| Handle lock device | LC | | LC-05SV | 129 |
| | HL(*1) | | HLF-05SV | |
| | | | HLN-05SV | |
| | HL-S | | HLS-05SV | |

Note *1 HLF types are used for OFF lock and HLN types for ON lock.

| Accessories | | | | Type name | Reference page |
|---|---|---|---|---|---|
| Mechanical interlock | | MI | 2, 3P | MI-05SV3 | 131 |
| | | | 4P | MI-05SV4 | |
| Terminal cover | Small | TC-S | 2P | TCS-05SV2 | 123 |
| | | | 3P | TCS-05SV3 | |
| | Large | TC-L | 2P | TCL-05SV2 | |
| | | | | TCL-05SV2L | |
| | | | 3P | TCL-05SV3 | |
| | | | | TCL-05SV3L | |
| | | | 4P | TCL-05SV4 | |
| | Skeleton | TTC | 2P | TTC-05SV2 | |
| | | | 3P | TTC-05SV3 | |
| | Rear | BTC | 2P | BTC-05SV2 | |
| | | | 3P | BTC-05SV3 | |
| | Plug-in | PTC | 2P | PTC-05SV2 | |
| | | | 3P | PTC-05SV3 | |
| IEC 35mm rail mounting adapters | | | | DIN-05SV | 139 |

## Outline Drawing

### Front connection

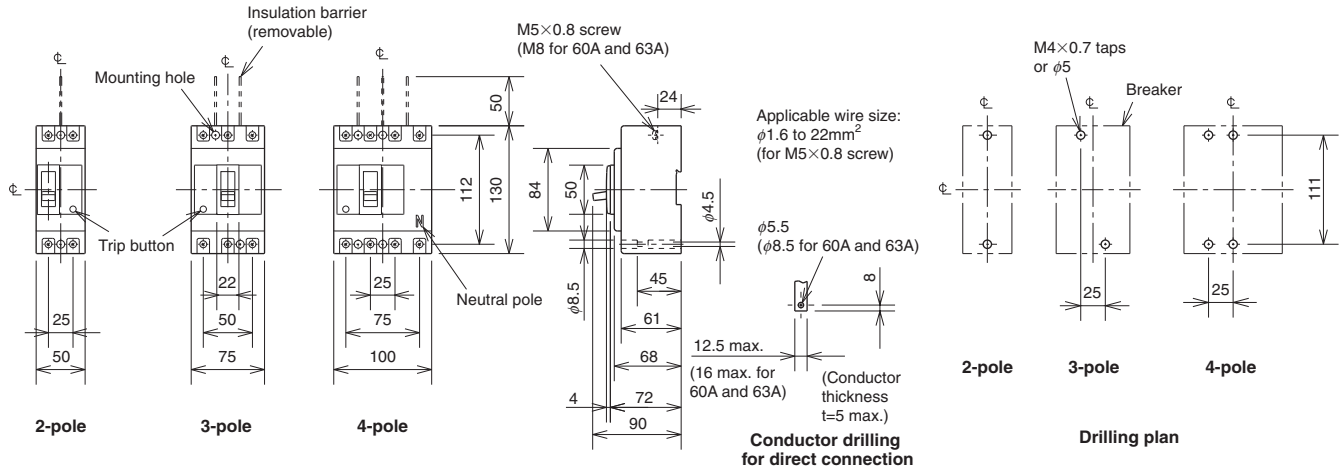


### Rear connection

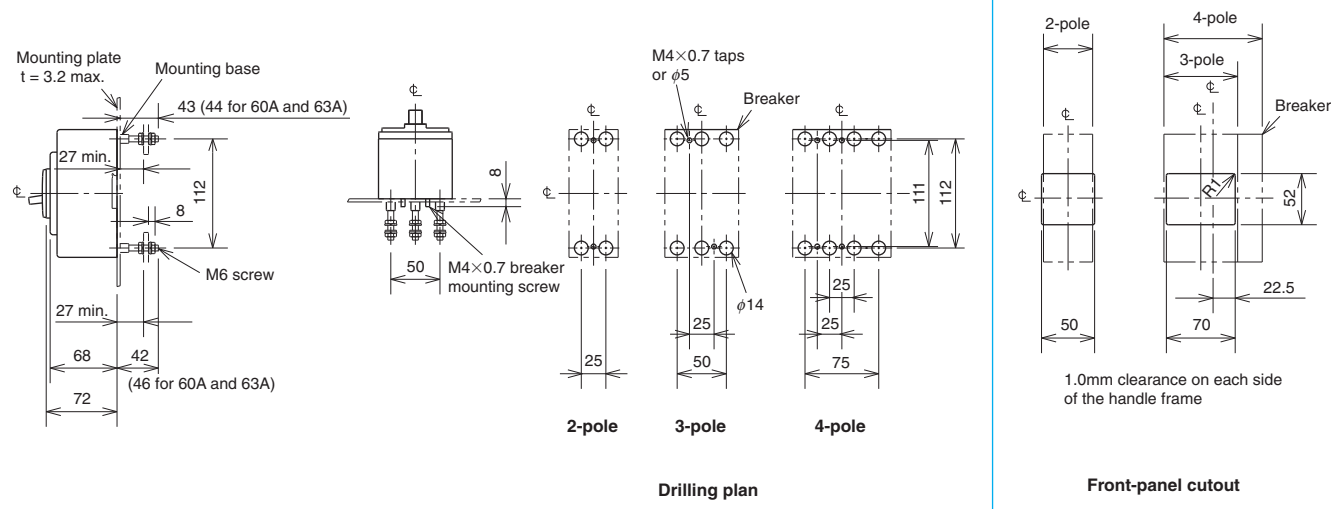


### Plug-in

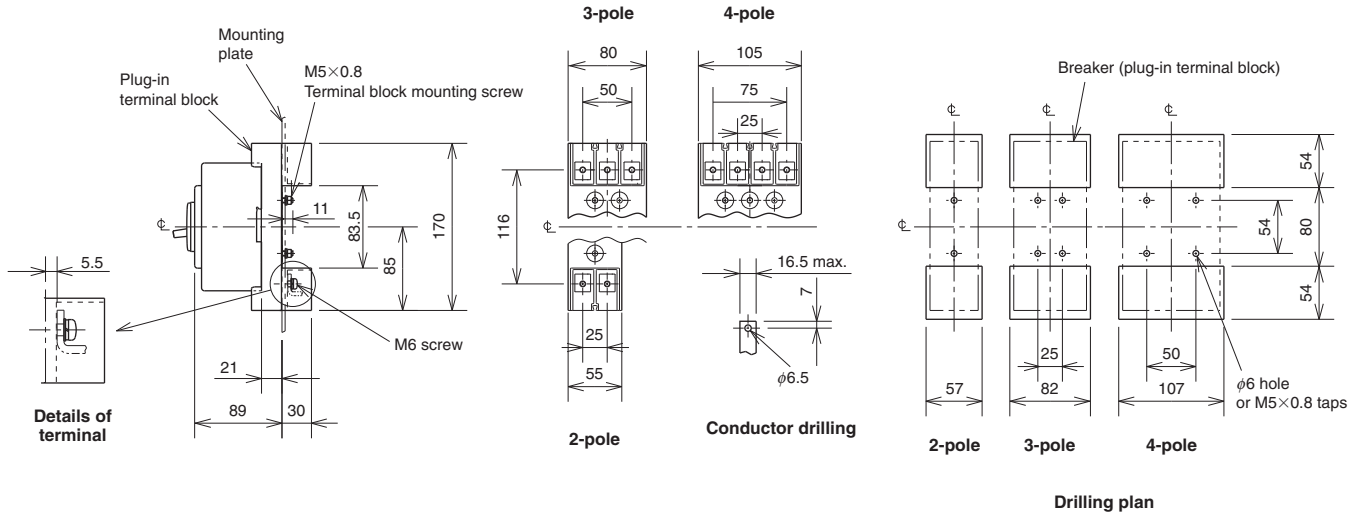


Remark: 1. Only 2-pole and 3-pole models are available for NF32-SV and NF63-CV.

# NF125-CV
# NF125-SV
# NF125-HV

NF125-SV

| Model | | | | NF125-CV | | NF125-SV | | | NF125-HV | | |
|---|---|---|---|---|---|---|---|---|---|---|---|
| Rated current In (A) | | | | 50 (60) 63 (75) 80 100 125 | | (15) 16 20 (30) 32 40 50 (60) 63 (75) 80 100 125 | | | (15) 16 20 (30) 32 40 50 (60) 63 (75) 80 100 125 | | |
| Number of poles | | | | 2 | 3 | 2 | 3 | 4 | 2 | 3 | 4 |
| Rated insulation voltage Ui (V) | | | | 600 | | 690 | | | 690 | | |
| Rated short-circuit breaking capacity (kA) | IEC 60947-2 (Icu/Ics) | AC | 690V | – | | 8/8 | | | 10/8 | | |
| | | | 500V | 7.5/4 | | 18/18 | | | 30/23 | | |
| | | | 440V | 10/5 | | 25/25 | | | 50/38 | | |
| | | | 415V | 10/5 | | 30/30 | | | 50/38 | | |
| | | | 400V | 10/5 | | 30/30 | | | 50/38 | | |
| | | | 380V | 10/5 | | 30/30 | | | 50/38 | | |
| | | | 230V | 30/15 | | 50/50 | | | 100/75 | | |
| | | DC | 250V (*1) | 7.5/4 | | 40/40 | | | – | | |
| Standard attached parts (front connection) | | | | Mounting screw: M4×0.7×55 (2 and 3P: 2pcs, 4P: 4pcs)<br>(*2) Insulation barrier: (2P: 1pc, 3P: 2pcs, 4P: 3pcs) | | | | | | | |

Notes *1 Use two poles for three- and four-pole products.
If wired as shown at the bottom on page 14, three and four poles can be used for up to 400 and 500VDC, respectively.
*2 Supplied with NF125-SV and NF125-HV.

## Operating Characteristics

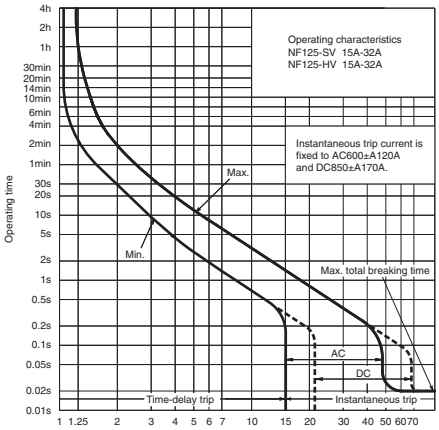


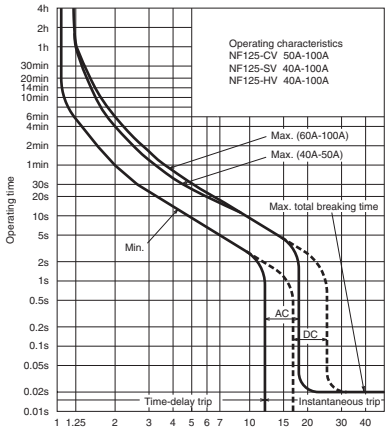


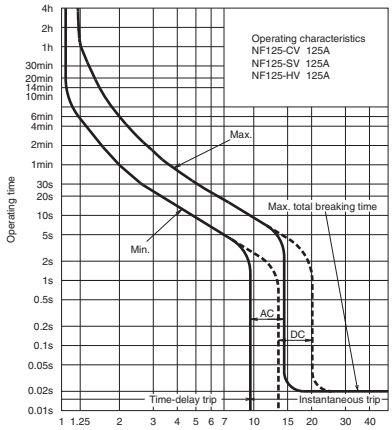


## Internal Accessories

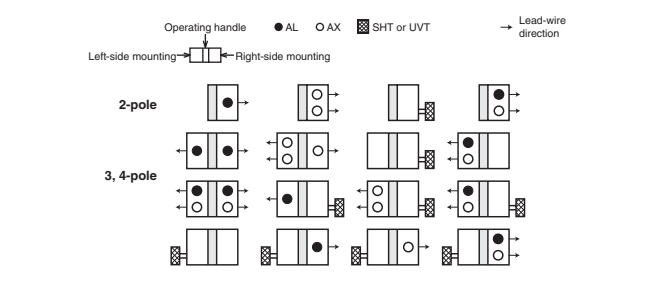


## Temperature Compensation Curve

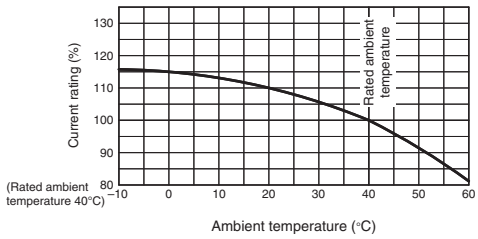


## External Accessories

| Accessories | | | Type name | Reference page |
|---|---|---|---|---|
| Operating handle | F | 2P | F-1SV2 | 119 |
| | | 3, 4P | F-1SV | |
| | V | 2P | V-1SV2 | 121 |
| | | 3, 4P | V-1SV | |
| Handle lock device | LC | | LC-05SV | 129 |
| | HL(*1) | | HLF-05SV | |
| | | | HLN-05SV | |
| | HL-S | | HLS-05SV | |

Notes *1 HLF types are used for OFF lock and HLN types for ON lock.
*2 Specify the working voltage. Refer to the reference page for type name.

| Accessories | | | | Type name | Reference page |
|---|---|---|---|---|---|
| Mechanical interlock | | MI | 2, 3P | MI-05SV3 | 131 |
| | | | 4P | MI-05SV4 | |
| Terminal cover | Small | TC-S | 2P | TCS-1SV2 | 123 |
| | | | 3P | TCS-1SV3 | |
| | Large | TC-L | 2P | TCL-1SV2 | |
| | | | 3P | TCL-1SV3 | |
| | | | 4P | TCL-1SV4 | |
| | Skeleton | TTC | 2P | TTC-1SV2 | |
| | | | 3P | TTC-1SV3 | |
| | Rear | BTC | 2P | BTC-1SV2 | |
| | | | 3P | BTC-1SV3 | |
| | Plug-in | PTC | 2P | PTC-1SV2 | |
| | | | 3P | PTC-1SV3 | |
| Electrical operation device | | | | (*2) | 135 |

## Outline Drawing

### Front connection

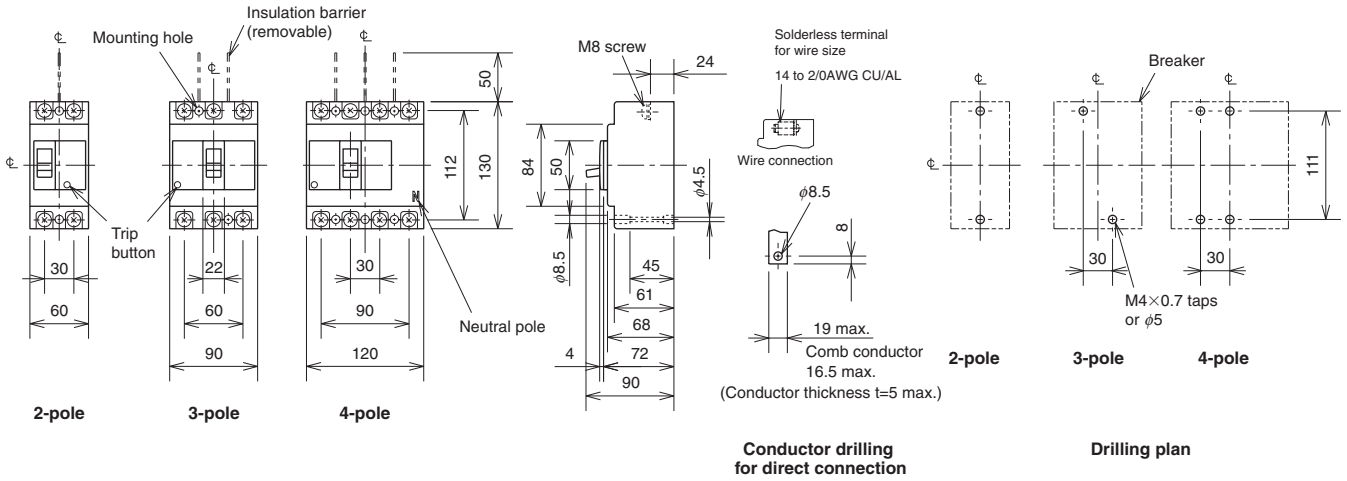


### Rear connection

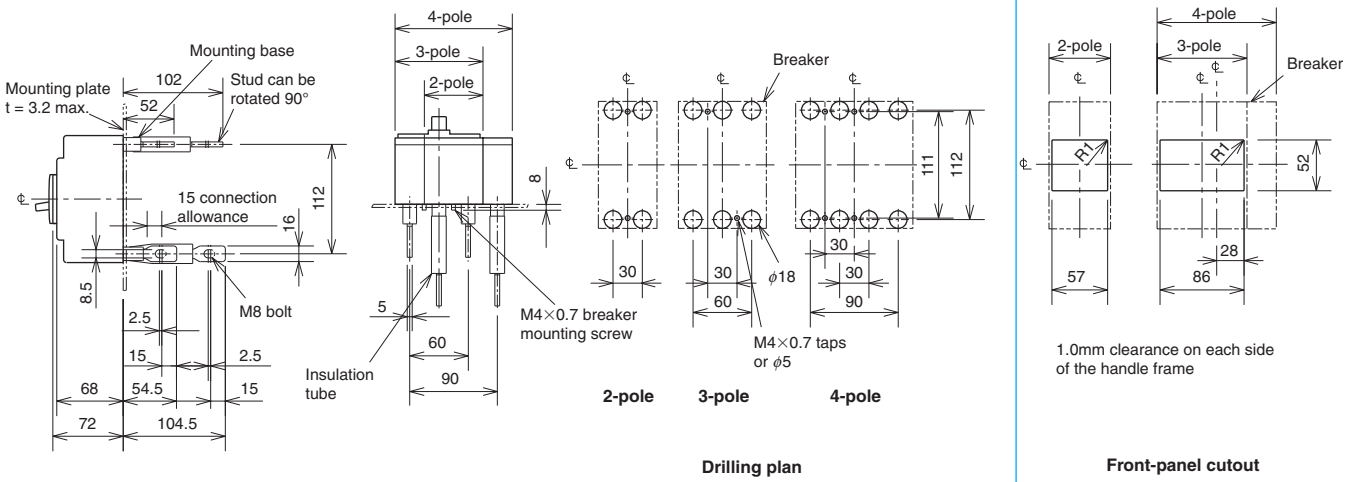


### Plug-in

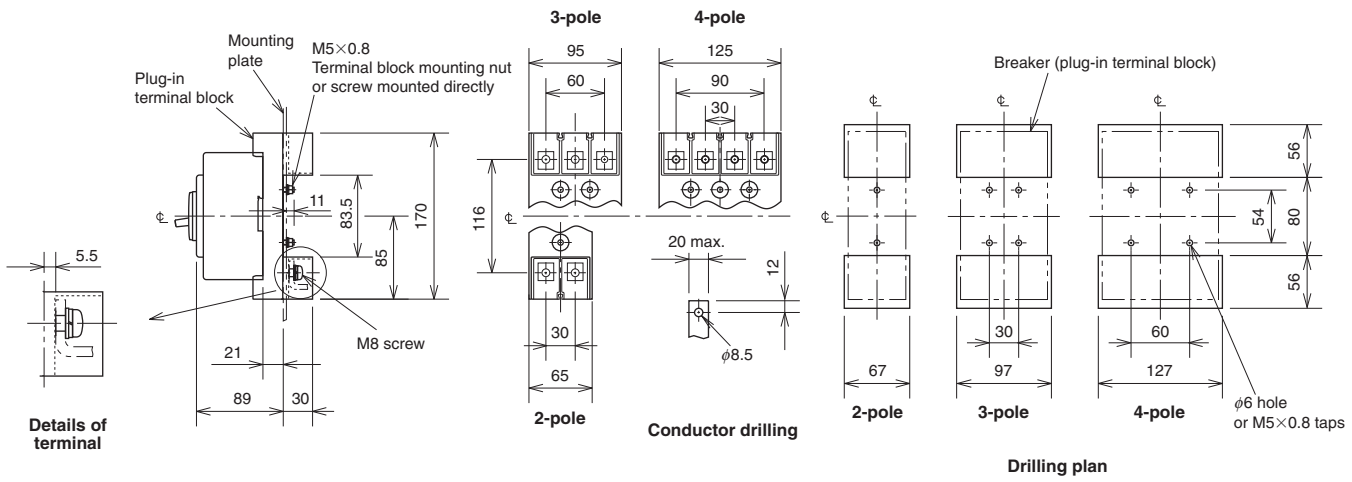


Remarks: 1. The 2-pole models of NF125-HV are 3-pole models with the central pole removed.
2. Only 2-and 3-pole models are available for NF125-CV.

# NF125-UV

NF125-UV

| Model | | | | NF125-UV | | |
|---|---|---|---|---|---|---|
| Rated current In (A) | | | | 15 20 30 40 50 60 75 100 125 | | |
| Number of poles | | | | 2 | 3 | 4 |
| Rated insulation voltage Ui (V) | | | | 690 | | |
| Rated short-circuit breaking capacity (kA) | IEC 60947-2 (Icu/Ics) | AC | 690V | 10/10 | | |
| | | | 500V | 200/200 | | |
| | | | 440V | 200/200 | | |
| | | | 415V | 200/200 | | |
| | | | 400V | 200/200 | | |
| | | | 380V | 200/200 | | |
| | | | 230V | 200/200 | | |
| | | DC | 250V | – | | |
| Standard attached parts (front connection) | | | | Mounting screw: M4×0.7×55 (2 and 3P: 2pcs, 4P: 4pcs) M4×0.7×73 (2 and 3P: 2pcs) | | |

## Operating Characteristics

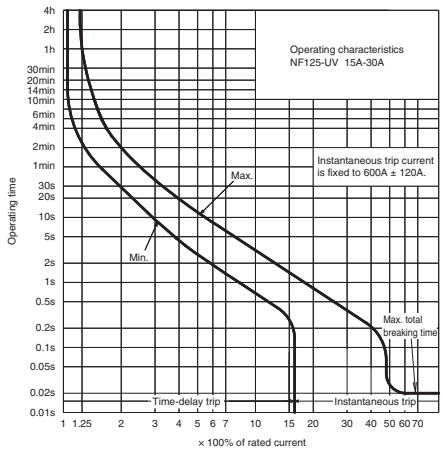


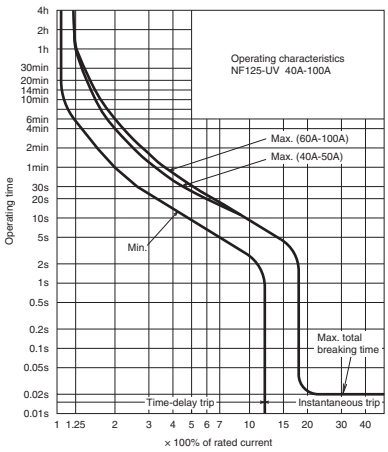


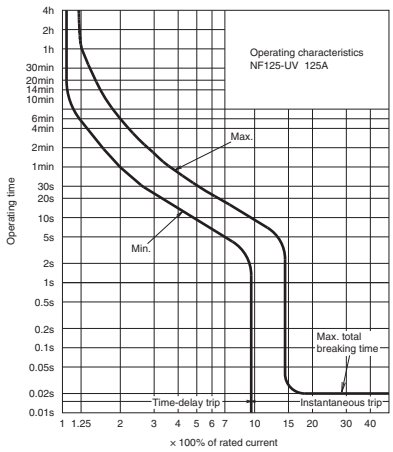


## Internal Accessories

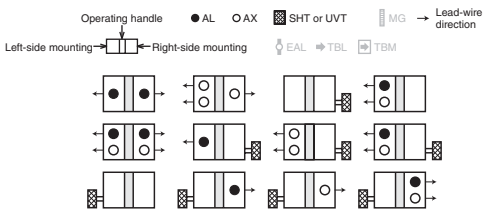


## Temperature Compensation Curve

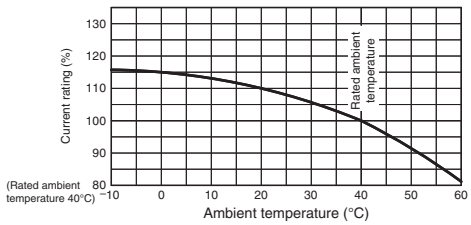


## External Accessories

| Accessories | | Type name | Reference page |
|---|---|---|---|
| Operating handle | F | F-1UV | 119 |
| | V | V-1UV | 121 |
| Lock cover | LC | LC-05SV | 129 |
| Handle lock device | HL (*1) | HLF-05SV | |
| | | HLN-05SV | |
| | HL-S | HLS-05SV | |

Notes *1 HLF types are used for OFF lock and HLN types for ON lock.
*2 Specify the working voltage. Refer to the reference page for type name.

| Accessories | | | | Type name | Reference page |
|---|---|---|---|---|---|
| Mechanical interlock | | MI | 2, 3P | MI-05SV3 | 131 |
| | | | 4P | MI-05SV4 | |
| Terminal cover | Small | TC-S | 3P | TCS-1SV3 | |
| | Large | TC-L | 3P | TCL-1SV3 | 123 |
| | | | 4P | TCL-1SV4 | |
| | Skeleton | TTC | 3P | TTC-1SV3 | |
| | Rear | BTC | 3P | BTC-1SV3 | |
| | Plug-in | PTC | 3P | PTC-1SV3 | |
| Electrical operation device | | | | (*2) | 135 |

## Outline Drawing

### Front connection

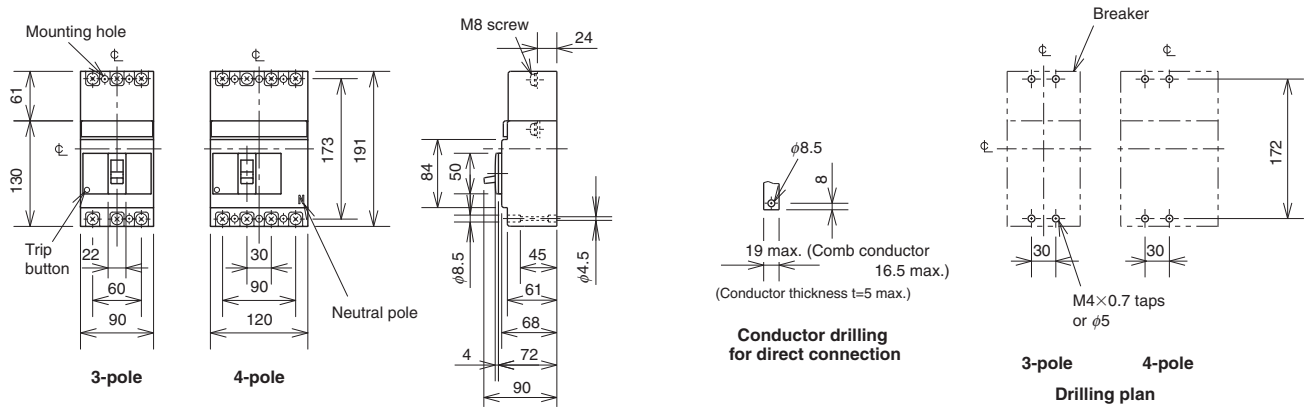


### Rear connection

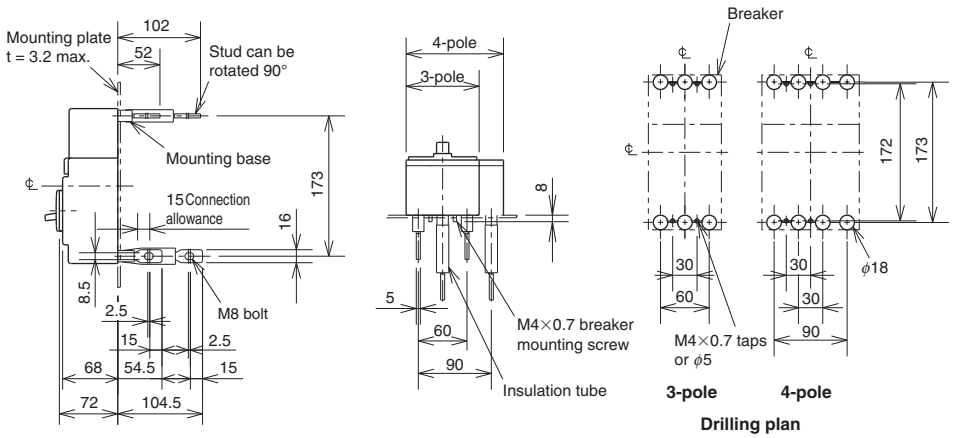


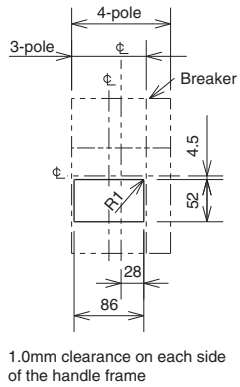


### Plug-in

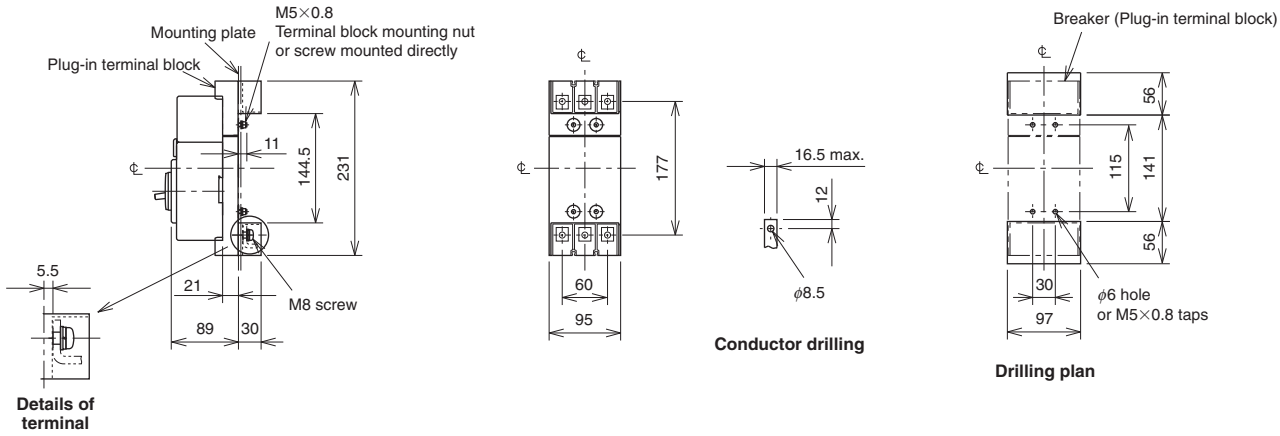


Remark: 1. 2-pole models are 3-pole models with the central pole removed.

# NF250-CV
# NF250-SV
# NF250-HV

NF250-SV

| Model | | | | NF250-CV | | NF250-SV | | | NF250-HV | | |
|---|---|---|---|---|---|---|---|---|---|---|---|
| Rated current In (A) | | | | (*1) (100) 125 150 175 200 225 250 | | (*1) (100) 125 150 160 175 200 225 250 | | | 125 150 160 175 200 225 250 | | |
| Number of poles | | | | 2 | 3 | 2 | 3 | 4 | 2 | 3 | 4 |
| Rated insulation voltage Ui (V) | | | | 600 | | 690 | | | 690 | | |
| Rated short-circuit breaking capacity (kA) | IEC 60947-2 (Icu/Ics) | AC | 690V | – | | 8/8 | | | 10/8 | | |
| | | | 500V | 10/8 | | 30/30 | | | 50/38 | | |
| | | | 440V | 15/12 | | 36/36 | | | 65/65 | | |
| | | | 415V | 25/19 | | 36/36 | | | 70/70 | | |
| | | | 400V | 25/19 | | 36/36 | | | 75/75 | | |
| | | | 380V | 25/19 | | 36/36 | | | 75/75 | | |
| | | | 230V | 36/27 | | 85/85 | | | 100/100 | | |
| | | DC (*1) | 250V | 15/12 | | 20/20 (300V) | | | 40/40 (300V) | | |
| Standard attached parts (front connection) | | | | Mounting screw: M4×0.7×55 (2 and 3P: 2pcs, 4P: 4pcs) Insulation barrier: (2P: 2pcs, 3P: 4pcs, 4P: 6pcs) | | | | | | | |

Note *1 Use two poles for three- and four-pole products. In this case, do not use the neutral pole of the four-pole products. If wired as shown at the bottom of page 14, three-pole NF250-CV can be used for up to 400VDC, three-pole NF250-SV and NF250-HV up to 500VDC and four-pole products up to 600VDC.

## Operating Characteristics

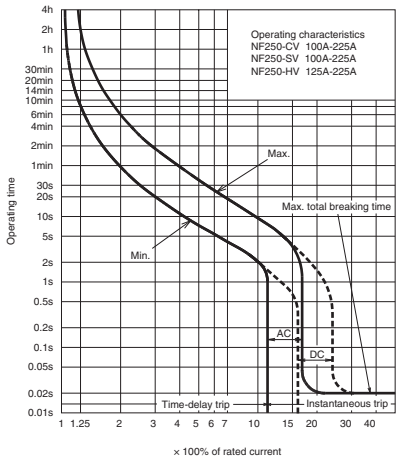


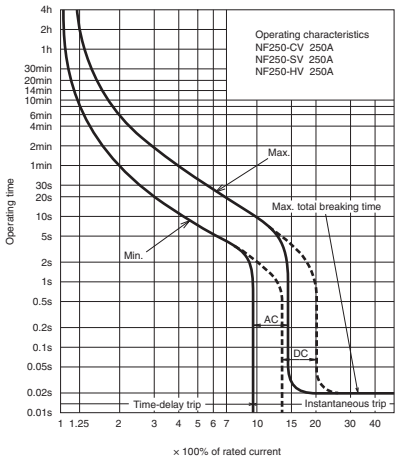


## Internal Accessories

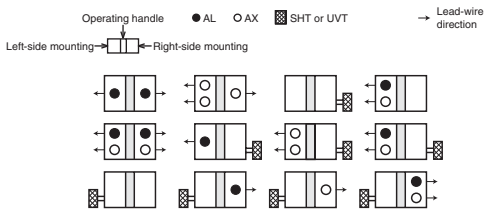


## Temperature Compensation Curve

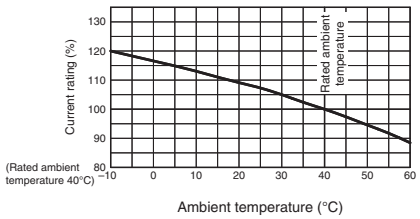


## External Accessories

| Accessories | | Type name | Reference page |
|---|---|---|---|
| Operating handle | F | F-2SV | 119 |
| | V | V-2SV | 121 |
| Handle lock device | LC | LC-05SV | 129 |
| | HL(*1) | HLF-05SV | |
| | | HLN-05SV | |
| | HL-S | HLS-2SV | |

Notes *1 HLF types are used for OFF lock and HLN types for ON lock.
*2 Specify the working voltage. Refer to the reference page for type name.

| Accessories | | | | Type name | Reference page |
|---|---|---|---|---|---|
| Mechanical interlock | | MI | 2, 3P | MI-05SV3 | 131 |
| | | | 4P | MI-2SV4 | |
| Terminal cover | Small | TC-S | 2, 3P | TCS-2SV3 | 123 |
| | Large | TC-L | 2, 3P | TCL-2SV3 | |
| | | | | TCL-2SV3L | |
| | | | 4P | TCL-2SV4 | |
| | Skeleton | TTC | 2, 3P | TTC-2SV3 | |
| | Rear | BTC | 2, 3P | BTC-2SV3 | |
| | Plug-in | PTC | 2, 3P | PTC-2SV3 | |
| Electrical operation device | | | | (*2) | 135 |

## Outline Drawing

### Front connection

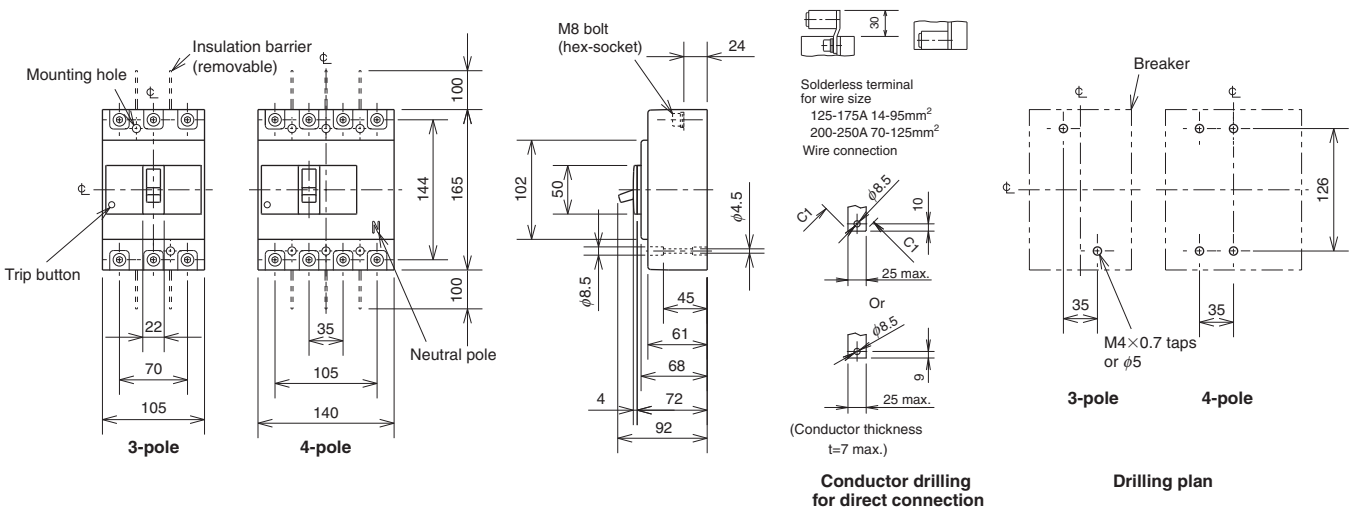


### Rear connection

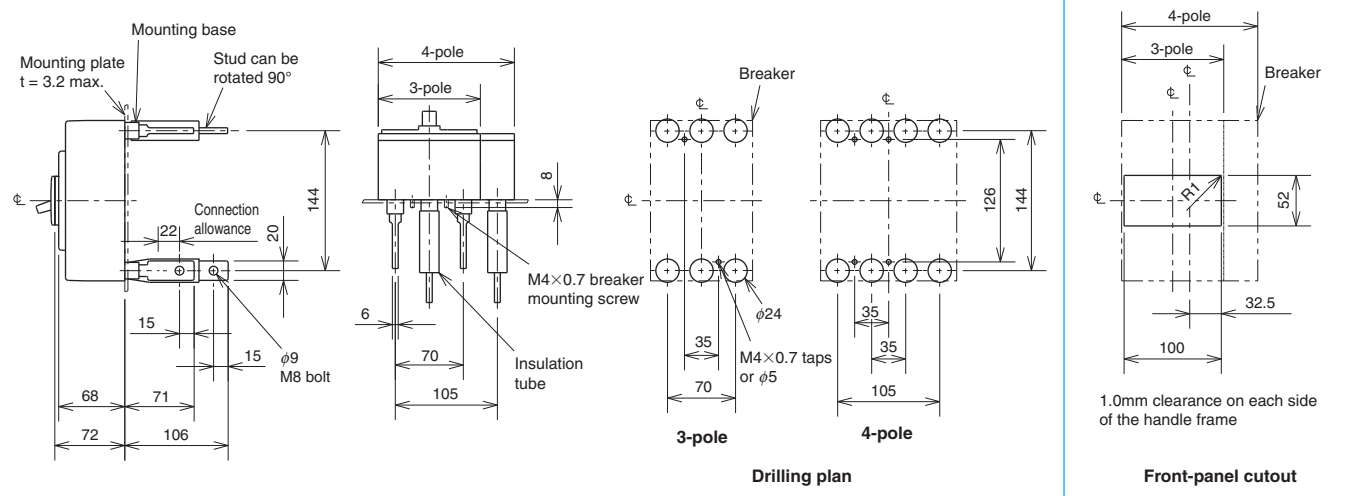


### Plug-in

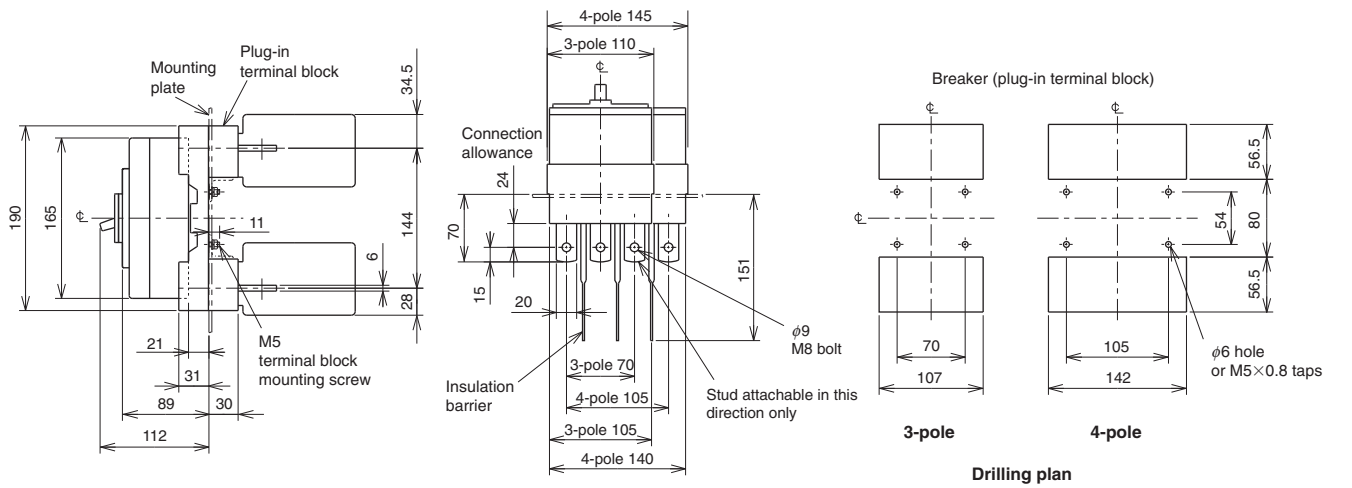


Remarks: 1. 2-pole models are 3-pole models with the central pole removed.
2. Only 2-pole and 3-pole models are available for NF250-CV.

# NF250-UV

NF250-UV

| Model | | | | NF250-UV | | |
|---|---|---|---|---|---|---|
| Rated current In (A) | | | | 125 150 175<br>200 225 250 | | |
| Number of poles | | | | 2 | 3 | 4 |
| Rated insulation voltage Ui (V) | | | | 690 | | |
| Rated short-circuit breaking capacity (kA) | IEC 60947-2 (Icu/Ics) | AC | 690V | 15/15 | | |
| | | | 500V | 200/200 | | |
| | | | 440V | 200/200 | | |
| | | | 415V | 200/200 | | |
| | | | 400V | 200/200 | | |
| | | | 380V | 200/200 | | |
| | | | 230V | 200/200 | | |
| | | DC | 250V | – | | |
| Standard attached parts (front connection) | | | | Mounting screw: M4×0.7×55 (2 and 3P: 2pcs, 4P: 4pcs)<br>Mounting screw: M4×0.7×73 (2 and 3P: 2pcs)<br>Insulation barrier: (2P: 2pcs, 3P: 4pcs, 4P: 6pcs) | | |

## Operating Characteristics

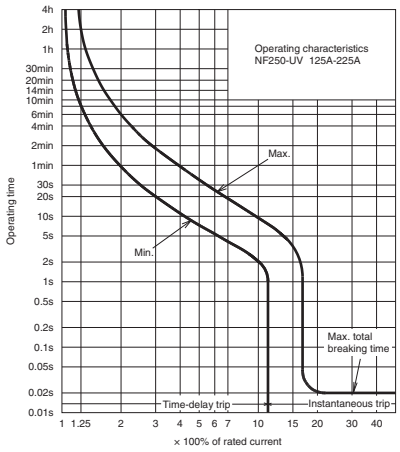


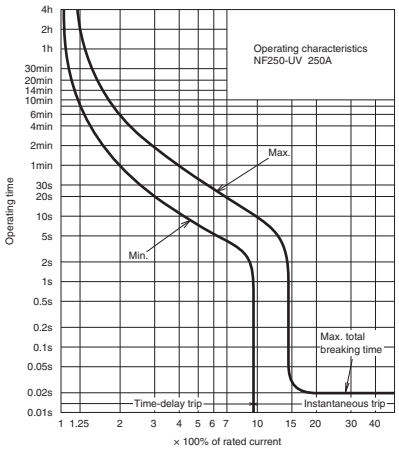


## Internal Accessories

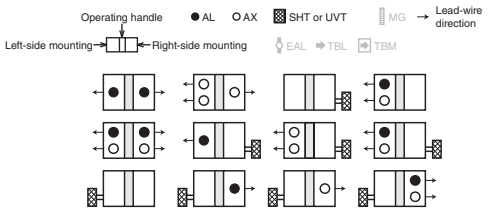


## Temperature Compensation Curve

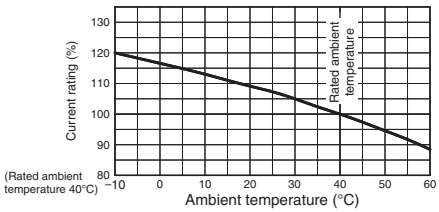


## External Accessories

| Accessories | | Type name | Reference page |
|---|---|---|---|
| Operating handle | F | F-2UV | 119 |
| | V | V-2UV | 121 |
| Handle lock device | LC | LC-05SV | 129 |
| | HL(*1) | HLF-05SV | |
| | | HLN-05SV | |
| | HL-S | HLS-2SV | |

Notes *1 HLF types are used for OFF lock and HLN types for ON lock.
*2 Specify the working voltage. Refer to the reference page for type name.

| Accessories | | | | Type name | Reference page |
|---|---|---|---|---|---|
| Mechanical interlock | | MI | 2, 3P | MI-05SV3 | 131 |
| | | | 4P | MI-2SV4 | |
| Terminal cover | Small | TC-S | 2, 3P | TCS-2SV3 | 123 |
| | Large | TC-L | 2, 3P | TCL-2SV3 | |
| | | | | TCL-2SV3L | |
| | | | 4P | TCL-2SV4 | |
| | Skeleton | TTC | 2, 3P | TTC-2SV3 | |
| | Rear | BTC | 2, 3P | BTC-2SV3 | |
| | Plug-in | PTC | 2, 3P | PTC-2SV3 | |
| Electrical operation device | | | | (*2) | 135 |

## Outline Drawing

### Front connection

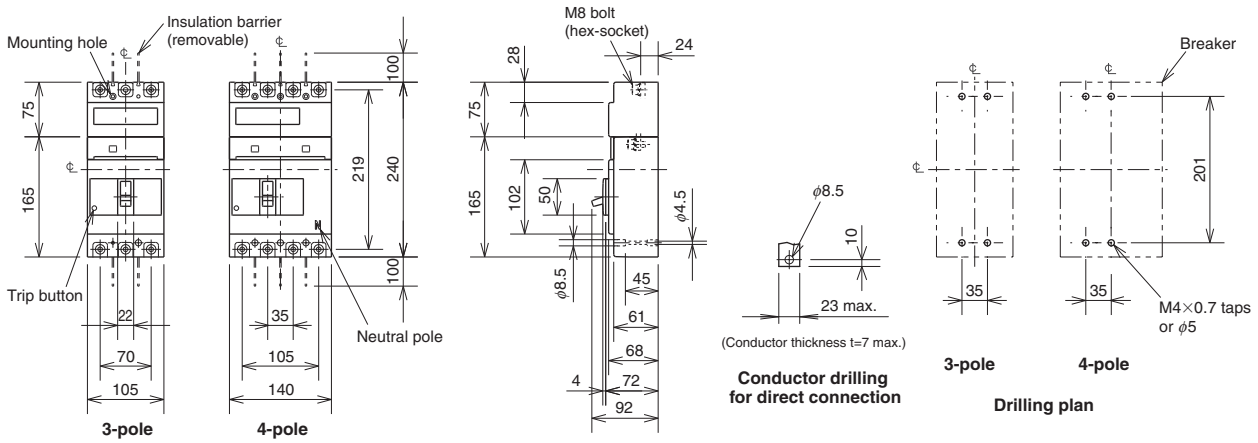


### Rear connection

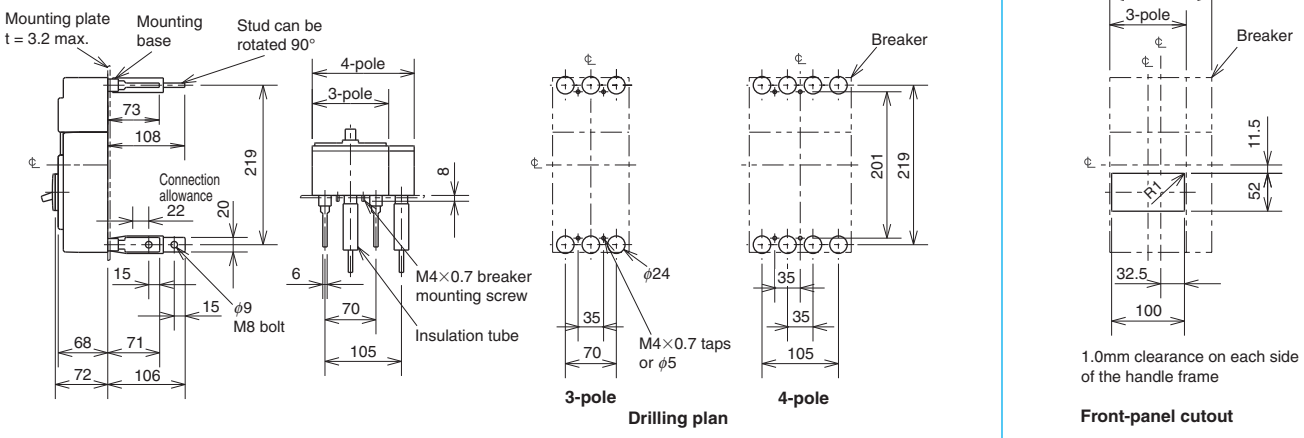


### Plug-in

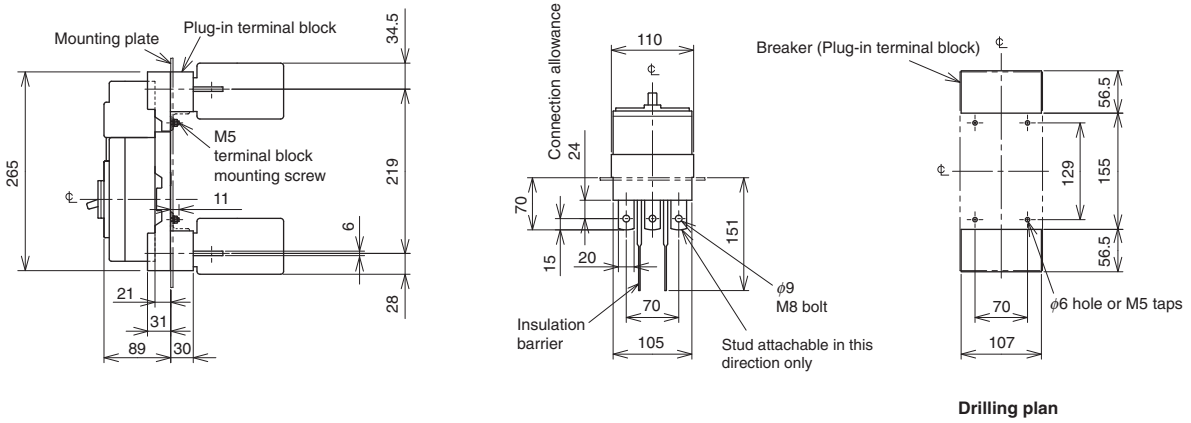


Remark: 1. 2-pole models are 3-pole models with the central pole removed.

**NF125-SGV NF160-SGV**
**NF250-SGV NF125-LGV**
**NF160-LGV NF250-LGV**
**NF125-HGV NF160-HGV**
**NF250-HGV NF125-RGV**
**NF250-RGV**

**NF250-SGV**

| Model | | | | NF125-SGV | NF160-SGV | NF250-SGV | NF125-LGV | NF160-LGV | NF250-LGV |
|---|---|---|---|---|---|---|---|---|---|
| Rated current In (A) | | | | 16-20, 20-25, 25-32<br>32-40, 35-50, 45-63<br>56-80, 70-100, 90-125 | 125-160 | 125-160<br>140-200<br>175-250 | 16-20, 20-25, 25-32<br>32-40, 35-50, 45-63<br>56-80, 70-100, 90-125 | 125-160 | 125-160<br>140-200<br>175-250 |
| Number of poles | | | | 2 3 4 | 2 3 4 | 2 3 4 | 2 3 4 | 2 3 4 | 2 3 4 |
| Rated insulation voltage Ui (V) | | | | 690 | 690 | 690 | 690 | 690 | 690 |
| Rated short-circuit breaking capacity (kA) | IEC 60947-2 (Icu/Ics) | AC | 690V | 8/8 | 8/8 | 8/8 | 8/8 | 8/8 | 8/8 |
| | | | 500V | 30/30 | 30/30 | 30/30 | 36/36 | 36/36 | 36/36 |
| | | | 440V | 36/36 | 36/36 | 36/36 | 50/50 | 50/50 | 50/50 |
| | | | 415V | 36/36 | 36/36 | 36/36 | 50/50 | 50/50 | 50/50 |
| | | | 400V | 36/36 | 36/36 | 36/36 | 50/50 | 50/50 | 50/50 |
| | | | 380V | 36/36 | 36/36 | 36/36 | 50/50 | 50/50 | 50/50 |
| | | | 230V | 85/85 | 85/85 | 85/85 | 90/90 | 90/90 | 90/90 |
| | | | 200V | 85/85 | 85/85 | 85/85 | 90/90 | 90/90 | 90/90 |
| | | DC (*1) | 300V | 20/20 | 20/20 | 20/20 | 20/20 | 20/20 | 20/20 |
| Standard attached parts (front connection) | | | | Mounting screw: M4×0.7×55 (2 and 3P: 2pcs, 4P: 4pcs)<br>Insulation barrier: (2P: 2pcs, 3P: 4pcs, 4P: 6pcs) | | | | | |

| Model | | | | NF125-HGV | NF160-HGV | NF250-HGV | NF125-RGV | NF250-RGV |
|---|---|---|---|---|---|---|---|---|
| Rated current In (A) | | | | 16-20, 20-25, 25-32<br>32-40, 35-50, 45-63<br>56-80, 70-100, 90-125 | 125-160 | 125-160<br>140-200<br>175-250 | 16-20, 20-25, 25-32<br>32-40, 40-50, 50-63<br>63-80, 80-100, 100-125 | 125-160<br>160-200<br>200-250 |
| Number of poles | | | | 2 3 4 | 2 3 4 | 2 3 4 | 2 3 | 2 3 |
| Rated insulation voltage Ui (V) | | | | 690 | 690 | 690 | 690 | 690 |
| Rated short-circuit breaking capacity (kA) | IEC 60947-2 (Icu/Ics) | AC | 690V | 10/8 | 10/8 | 10/8 | – | – |
| | | | 500V | 50/38 | 50/38 | 50/38 | – | – |
| | | | 440V | 65/65 | 65/65 | 65/65 | 125/125 | 125/125 |
| | | | 415V | 70/70 | 70/70 | 70/70 | 150/150 | 150/150 |
| | | | 400V | 75/75 | 75/75 | 75/75 | 150/150 | 150/150 |
| | | | 380V | 75/75 | 75/75 | 75/75 | 150/150 | 150/150 |
| | | | 230V | 100/100 | 100/100 | 100/100 | 150/150 | 150/150 |
| | | | 200V | 100/100 | 100/100 | 100/100 | 150/150 | 150/150 |
| | | DC (*1) | 300V | 40/40 | 40/40 | 40/40 | – | – |
| Standard attached parts (front connection) | | | | Mounting screw: M4×0.7×55 (2 and 3P: 2pcs, 4P: 4pcs)<br>Insulation barrier: (2P: 2pcs, 3P: 4pcs, 4P: 6pcs) | | | | |

Note *1 When wired as shown at the bottom of page 14, three-pole models can be used for up to 500VDC, and four-pole models for up to 600VDC.

## Operating Characteristics

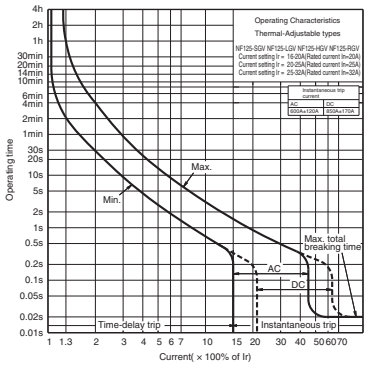


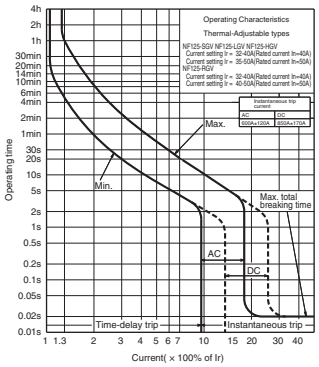


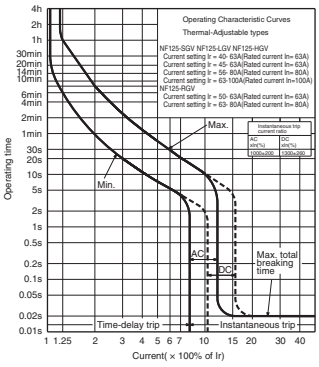


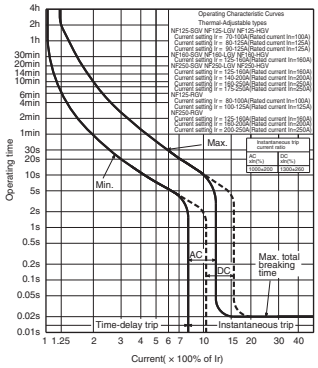


## Internal Accessories

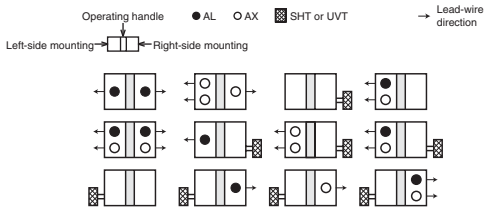


## Temperature Compensation Curve

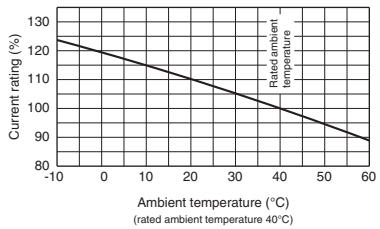


## External Accessories

| Accessories | | Type name | Reference page |
|---|---|---|---|
| Operating handle | F | F-2SV | 119 |
| | V | V-2SV | 121 |
| Handle lock device | LC | LC-05SV | 129 |
| | HL(*1) | HLF-05SV | |
| | | HLN-05SV | |
| | HL-S | HLS-2SV | |

| Accessories | | | | Type name | Reference page |
|---|---|---|---|---|---|
| Mechanical interlock | | MI | 2, 3P | MI-05SV3 | 131 |
| | | | 4P | MI-2SV4 | |
| Terminal cover | Small | TC-S | 2, 3P | TCS-2SV3 | 123 |
| | Large | TC-L | 2, 3P | TCL-2SV3 | |
| | | | | TCL-2SV3L | |
| | | | 4P | TCL-2SV4 | |
| | Skeleton | TTC | 2, 3P | TTC-2SV3 | |
| | Rear | BTC | 2, 3P | BTC-2SV3 | |
| | Plug-in | PTC | 2, 3P | PTC-2SV3 | |
| Electrical operation device | | | | (*2) | 135 |

Notes *1 HLF types are used for OFF lock and HLN types for ON lock.
*2 Specify the working voltage. Refer to the reference page for type name.

## Outline Drawing

### Front connection

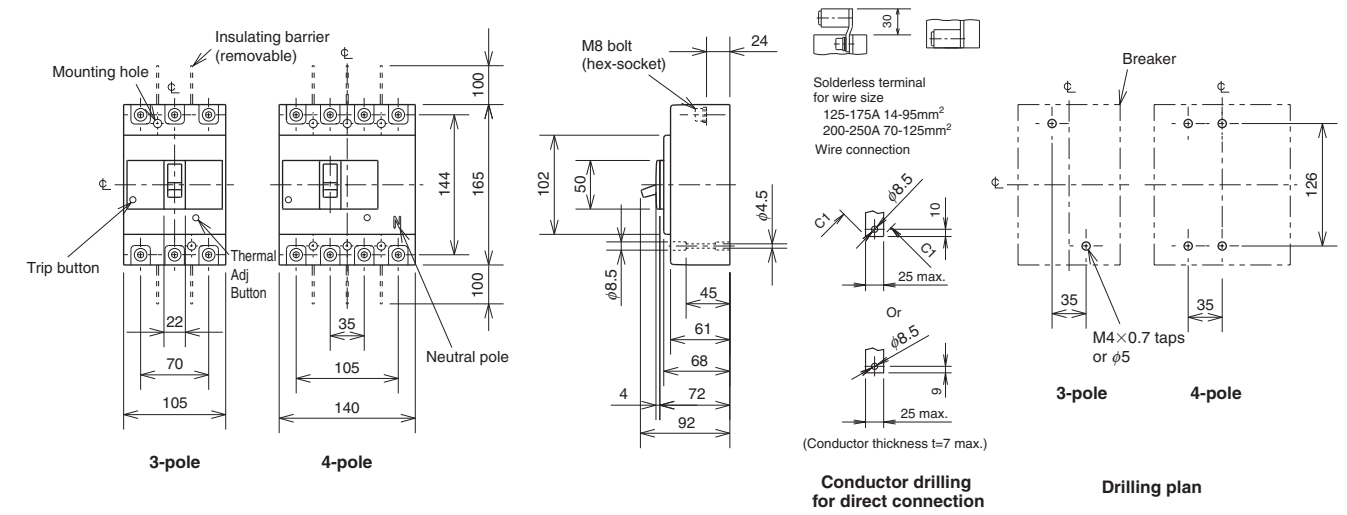


### Rear connection

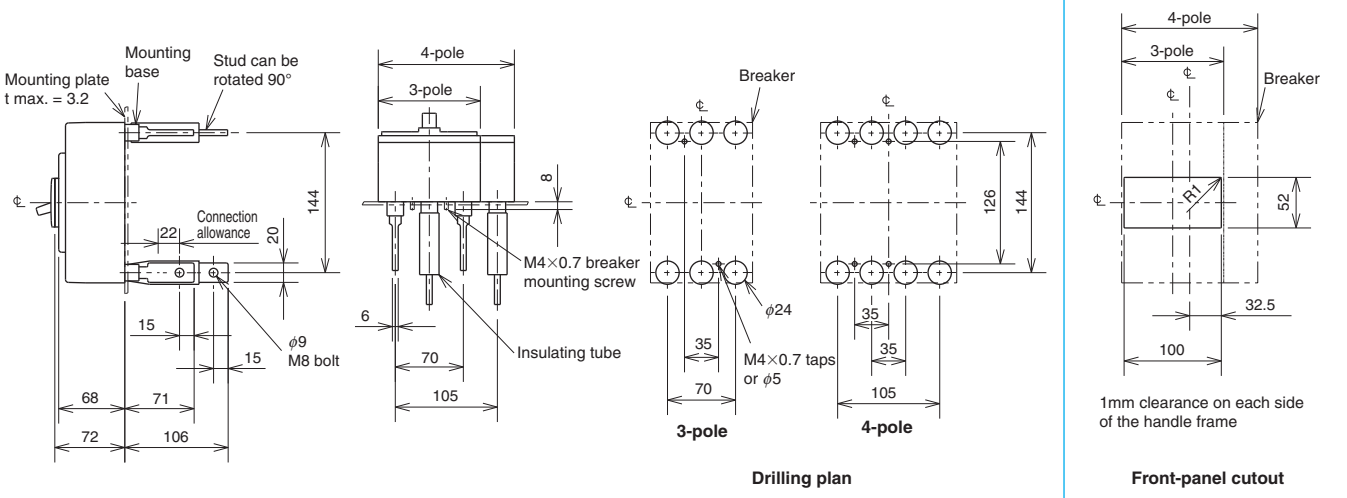


### Plug-in

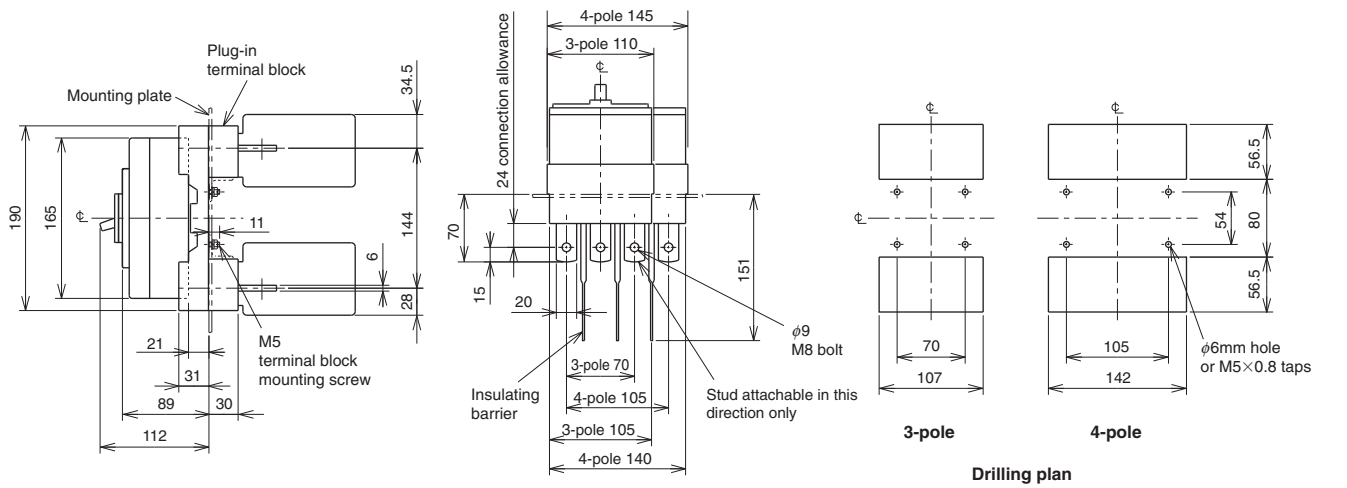


Remark: 1. 2-pole models are 3-pole models with the central pole removed.

# NF125-SEV
# NF125-HEV
# NF250-SEV
# NF250-HEV

NF125-SEV

| Model | | | | NF125-SEV | NF125-HEV | NF250-SEV | NF250-HEV |
|---|---|---|---|---|---|---|---|
| Rated current In (A) | | | | 32 63 125 | 32 63 125 | 160 250 | 160 250 |
| Current setting Ir (A) | | | | 16-32 32-63 63-125 | 16-32 32-63 63-125 | 80-160 125-250 | 80-160 125-250 |
| Number of poles | | | | 3 4 | 3 4 | 3 4 | 3 4 |
| Rated insulation voltage Ui (V) | | | | 690 | 690 | 690 | 690 |
| Rated short-circuit breaking capacity (kA) | IEC 60947-2 (Icu/Ics) | AC | 690V | 8/8 | 10/8 | 8/8 | 10/8 |
| | | | 500V | 30/30 | 50/38 | 30/30 | 50/38 |
| | | | 440V | 36/36 | 65/65 | 36/36 | 65/65 |
| | | | 415V | 36/36 | 70/70 | 36/36 | 70/70 |
| | | | 400V | 36/36 | 75/75 | 36/36 | 75/75 |
| | | | 380V | 36/36 | 75/75 | 36/36 | 75/75 |
| | | | 230V | 85/85 | 100/100 | 85/85 | 100/100 |
| | | DC | 250V | – | – | – | – |
| Standard attached parts (front connection) | | | | Mounting screw: M4×0.7×55 (3P: 2pcs, 4P: 4pcs)<br>Insulation barrier: (3P: 4pcs, 4P: 6pcs) | | | |

## Operating Characteristics

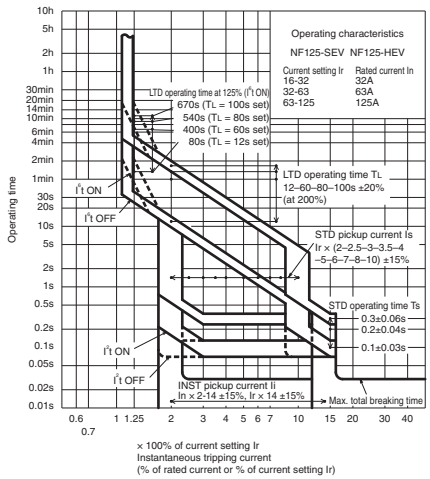


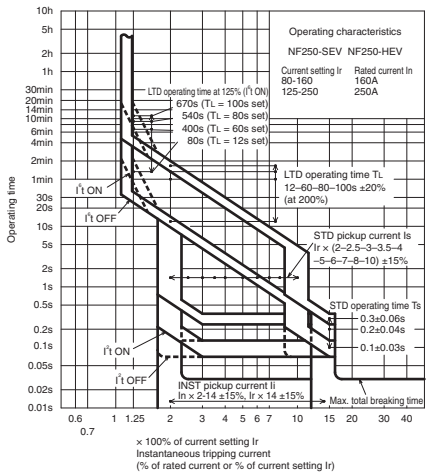


## Internal Accessories

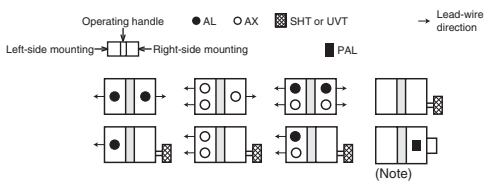


## Current Reducing Curve

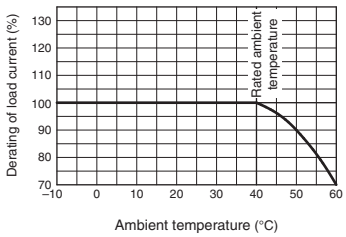


The rated current does not have thermal characteristics. Reduce the current as shown in the curve on the left chart if the ambient temperature exceeds 40 °C.

## External Accessories

| Accessories | | Type name | Reference page |
|---|---|---|---|
| Operating handle | F | F-2SV | 119 |
| | V | V-2SV | 121 |
| Handle lock device | LC | LC-05SV | 129 |
| | HL(*1) | HLF-05SV | |
| | | HLN-05SV | |
| | HL-S | HLS-2SV | |

Notes *1 HLF types are used for OFF lock and HLN types for ON lock.
*2 Specify the working voltage. Refer to the reference page for type name.

| Accessories | | | | Type name | Reference page |
|---|---|---|---|---|---|
| Mechanical interlock | | MI | 3P | MI-05SV3 | 131 |
| | | | 4P | MI-2SV4 | |
| Terminal cover | Small | TC-S | 3P | TCS-2SV3 | 123 |
| | Large | TC-L | 3P | TCL-2SV3 | |
| | | | | TCL-2SV3L | |
| | | | 4P | TCL-2SV4 | |
| | Skeleton | TTC | 3P | TTC-2SV3 | |
| | Rear | BTC | 3P | BTC-2SV3 | |
| | Plug-in | PTC | 3P | PTC-2SV3 | |
| Electrical operation device | | | | (*2) | 135 |

## Outline Drawing

### Front connection

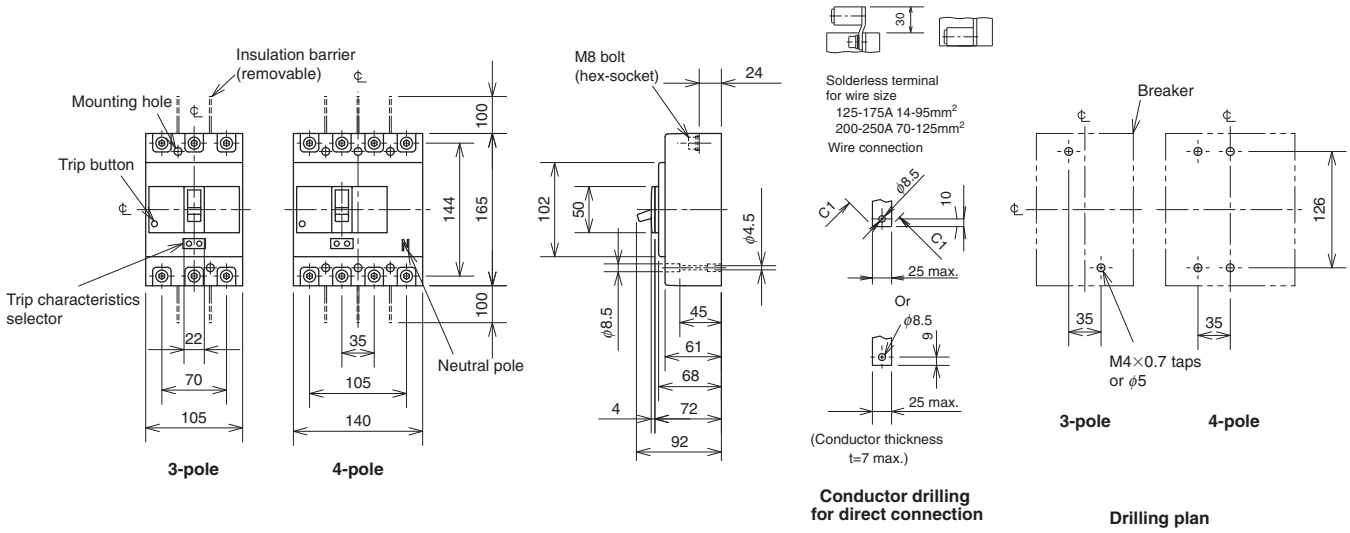


### Rear connection

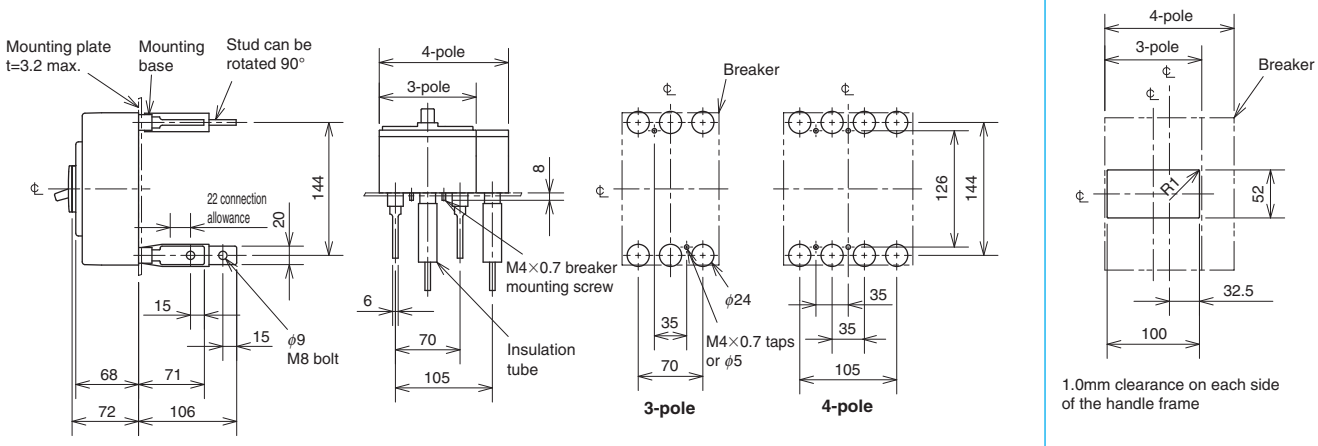


### Plug-in

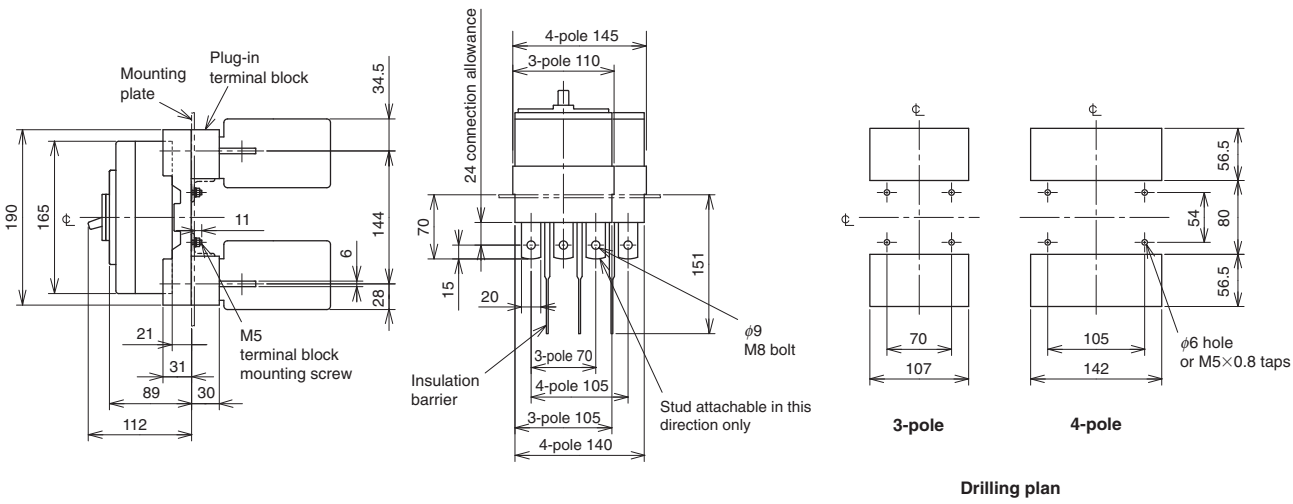

# NF400-CW
# NF400-SW

NF400-SW

| Model | | | | NF400-CW | | NF400-SW | | |
|---|---|---|---|---|---|---|---|---|
| Rated current In (A) | | | | 250 300 | | 350 400 | | |
| Number of poles | | | | 2 | 3 | 2 | 3 | 4 |
| Rated insulation voltage Ui (V) | | | | 690 | | 690 | | |
| Rated short-circuit breaking capacity (kA) | IEC 60947-2 (Icu/Ics) | AC | 690V | – | | 10/10 | | |
| | | | 500V | 15/8 | | 30/30 | | |
| | | | 440V | 25/13 | | 42/42 | | |
| | | | 400V | 36/18 | | 45/45 | | |
| | | | 230V | 50/25 | | 85/85 | | |
| | | DC (*1) | 250V | 20/10 | | 40/40 | | |
| Standard attached parts | | | Front connection | Mounting screw: M6×60 (4pcs)<br>Insulating barrier: (2P: 2pcs, 3P: 4pcs, 4P: 6pcs) | | | | |
| | | | Rear connection | Mounting screw: M6×72 (4pcs) | | | | |

Note *1 When wired as shown at the bottom of page 14, 3-pole models can be used for up to 400VDC, and 4-pole models for up to 500VDC.

## Operating Characteristics

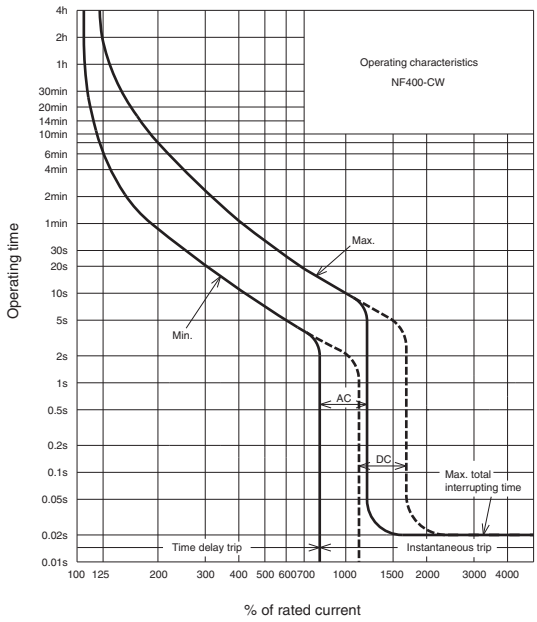


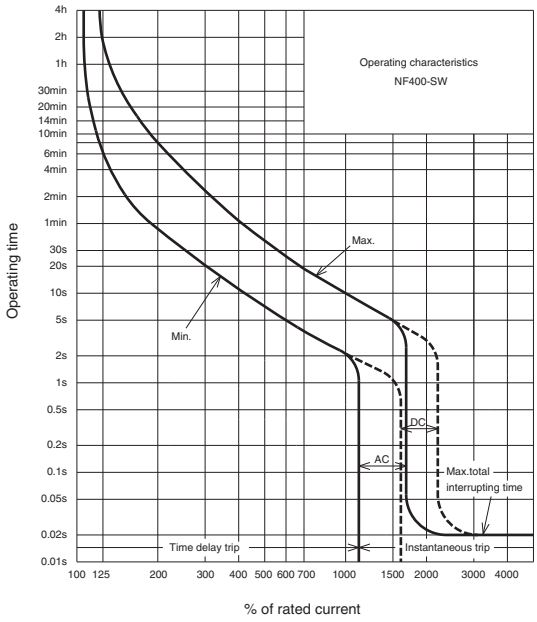


## Internal Accessories

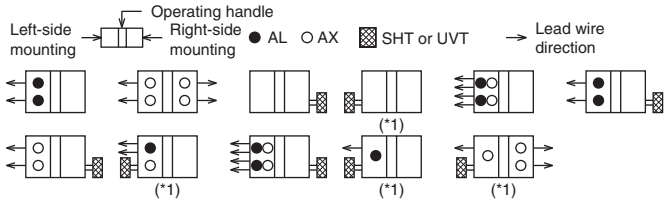


Note *1 Right-side mounting is standard of SHT and UVT. Specify separately for left-side mounting.
Remark: 1. Refer to page 106.

## Temperature Compensation Curve

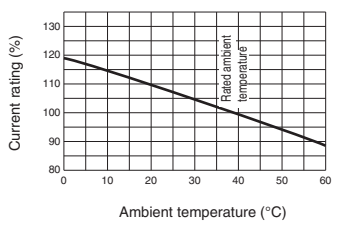


## External Accessories

| Accessories | | | Type name | Reference page |
|---|---|---|---|---|
| Operating handle | F | | F-4S | 119 |
| | V | | V-4S | 121 |
| Mechanical interlock | MI | 2, 3P | MI-4SW3 | 131 |
| | | 4P | MI-4SW4 | |
| Auxiliary handle | HT | | HT-4CW, HT-4SW | 130 |

Note *1 Specify the operation method and voltage. Order in combination with the breaker unit.

| Accessories | | | | Type name | Reference page |
|---|---|---|---|---|---|
| Terminal cover | Large | TC-L | 2, 3P | TCL-4SW3 | 123 |
| | | | 4P | TCL-4SW4 | |
| | Skeleton | TTC | 2, 3P | TTC-4SW3 | |
| | | | 4P | TTC-4SW4 | |
| | Rear | BTC | 2, 3P | BTC-4SW3 | |
| | | | 4P | BTC-4SW4 | |
| Handle lock device | | HL | | HL-4CW, HL-4SW | 129 |
| | | HL-S | | HLS-4SW | |
| Electrical operation device | | NFM | 3P | (*1) | 135 |
| | | | 4P | | |

## Outline Drawing

### Front connection

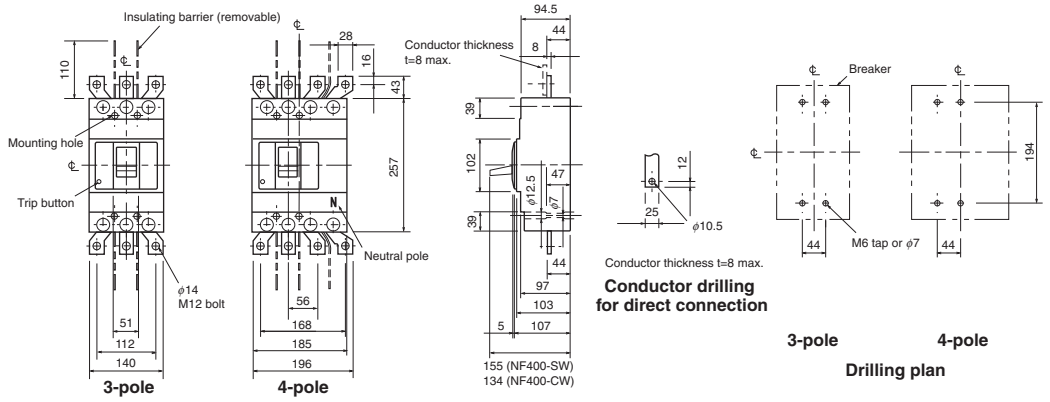


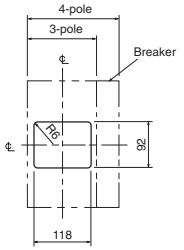


1.0mm clearance on each side of the handle frame.

**Front-panel cutout**

### Rear connection

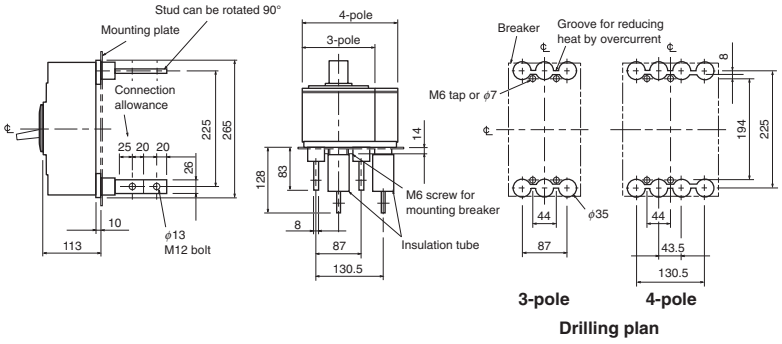


**Boring dimensions for rear connection type barriers (3-pole)**

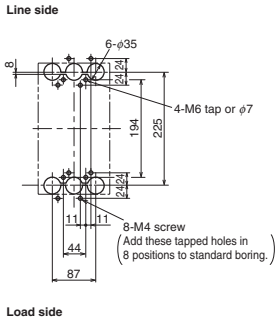


Note The bore dimensional drawing shows the breaker viewed from the rear.

### Plug-in

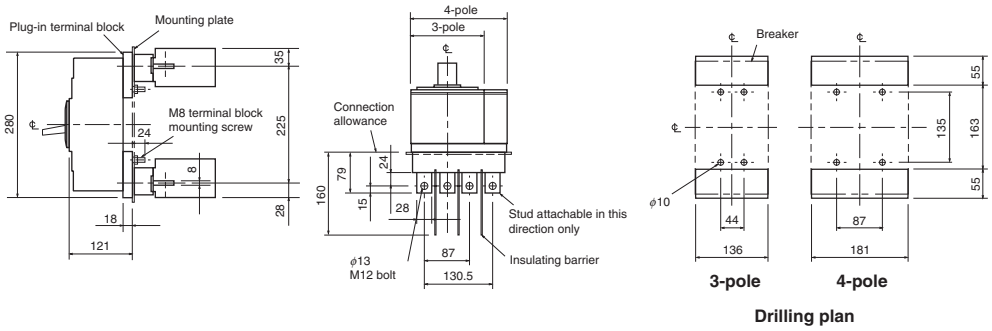


Remark: 1. 2-pole models are 3-pole models with the central pole removed.

# NF400-SEW
# NF400-HEW
# NF400-REW

NF400-SEW

| Model | | | | NF400-SEW | | NF400-HEW | | NF400-REW |
|---|---|---|---|---|---|---|---|---|
| Rated current In (A) | | | | 200-400 adjustable | | | | |
| Number of poles | | | | 3 | 4 | 3 | 4 | 3 |
| Rated insulation voltage Ui (V) | | | | 690 | | 690 | | 690 |
| Rated short-circuit breaking capacity (kA) | IEC 60947-2 (Icu/Ics) | AC | 690V | 10/10 | | 35/18 | | – |
| | | | 500V | 30/30 | | 50/50 | | 70/35 |
| | | | 440V | 42/42 | | 65/65 | | 125/63 |
| | | | 400V | 50/50 | | 70/70 | | 125/63 |
| | | | 230V | 85/85 | | 100/100 | | 150/75 |
| Standard attached parts | | | Front connection | Mounting screw: M6×72 (4pcs)<br>Insulating barrier: (3P: 4pcs, 4P: 6pcs) | | | | |
| | | | Rear connection | Mounting screw: M6×85 (4pcs) | | | | |

## Operating Characteristics

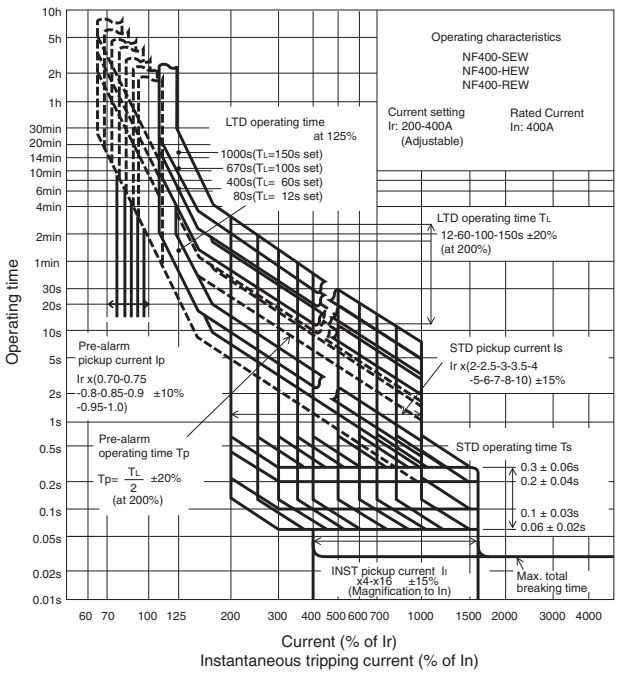


## Internal Accessories

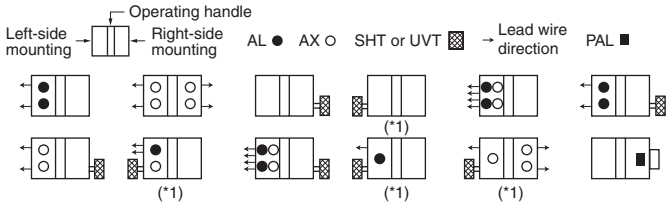


Note *1 Right-side mounting is standard of SHT and UVT. Specify separately for left-side mounting.

Remark: 1. Refer to page 106.

## Current Reducing Curve

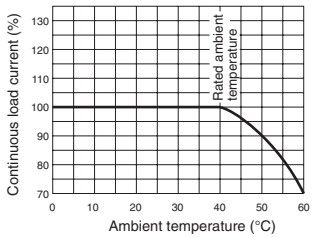


## External Accessories

| Accessories | | | Type name | Reference page |
|---|---|---|---|---|
| Operating handle | F | | F-4S | 119 |
| | V | | V-4S | 121 |
| Mechanical interlock | MI | 3P | MI-4SW3 | 131 |
| | | 4P | MI-4SW4 | |
| Auxiliary handle | HT | | HT-4SW | 130 |

| Accessories | | | | Type name | Reference page |
|---|---|---|---|---|---|
| Terminal cover | Large | TC-L | 3P | TCL-4SW3 (*2) | 123 |
| | | | 4P | TCL-4SW4 (*3) | |
| | Skeleton | TTC | 3P | TTC-4SW3 | |
| | | | 4P | TTC-4SW4 | |
| | Rear | BTC | 3P | BTC-4SW3 (*2) | |
| | | | 4P | BTC-4SW4 (*3) | |
| Handle lock device | | HL | | HL-4SW | 129 |
| | | HL-S | | HLS-4SW | |
| Electrical operation device | | NFM | 3P | (*1) | 135 |
| | | | 4P | | |

Notes *1 Specify the operation method and voltage. Order in combination with the breaker unit.
*2 This is for NF400-SEW.
*3 This is for NF400-SEW/HEW.

## Outline Drawing

### Front connection

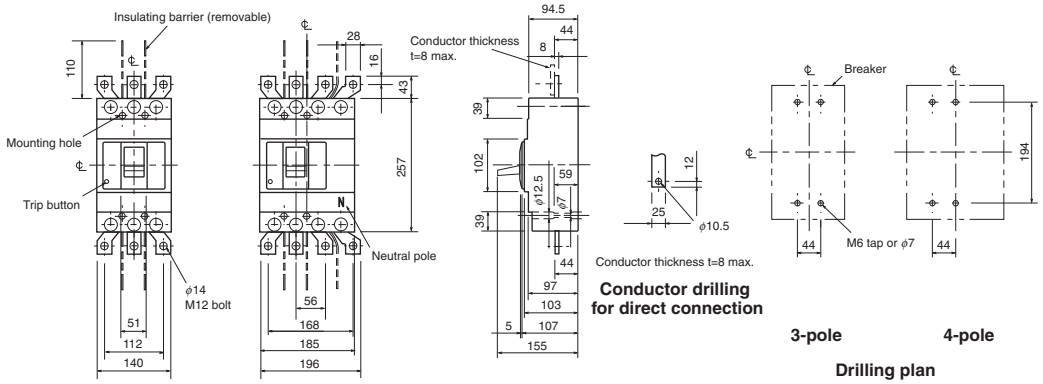


**Conductor drilling for direct connection**

**Drilling plan**

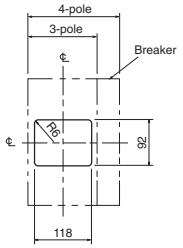


1.0mm clearance on each side of the handle frame.

**Front-panel cutout**

### Rear connection

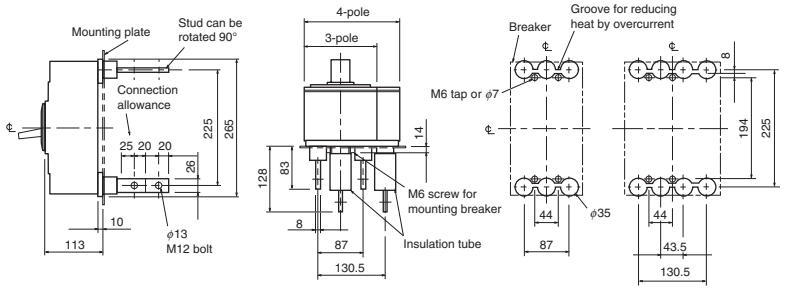


**3-pole** **4-pole**

**Drilling plan**

**Boring dimensions for rear connection type barriers (3-pole)**

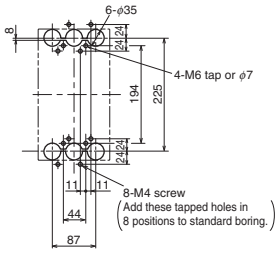


Note The bore dimensional drawing shows the breaker viewed from the rear.

### Plug-in

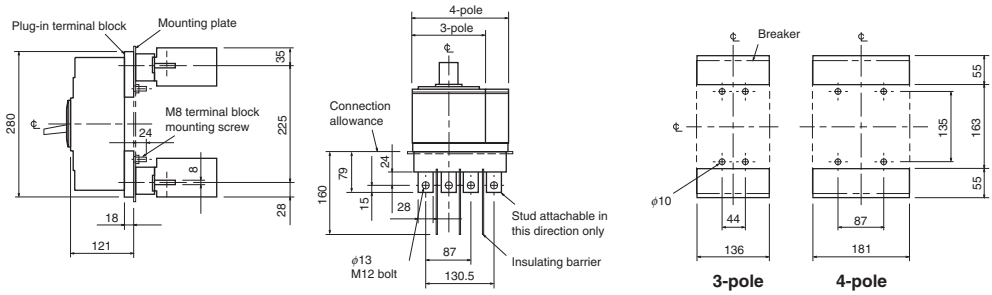


**Drilling plan**

# NF400-UEW

NF400-UEW

| Model | | | | NF400-UEW | |
|---|---|---|---|---|---|
| Rated current In (A) | | | | 200-400 adjustable | |
| Number of poles | | | | 3 | 4 |
| Rated insulation voltage Ui (V) | | | | 690 | |
| Rated short-circuit breaking capacity (kA) | IEC 60947-2 (Icu/Ics) | AC | 690V | – | |
| | | | 500V | 170/170 | |
| | | | 440V | 200/200 | |
| | | | 400V | 200/200 | |
| | | | 230V | 200/200 | |
| Standard attached parts (4-pole models are provided with auxiliary handle.) | | | Front connection | Mounting screw: M6×65 (2pcs), M6×174 (2pcs) Insulating barrier: (3P: 4pcs) | |
| | | | Rear connection | Mounting screw: M6×72 (2pcs), M6×181 (2pcs) | |

## Operating Characteristics

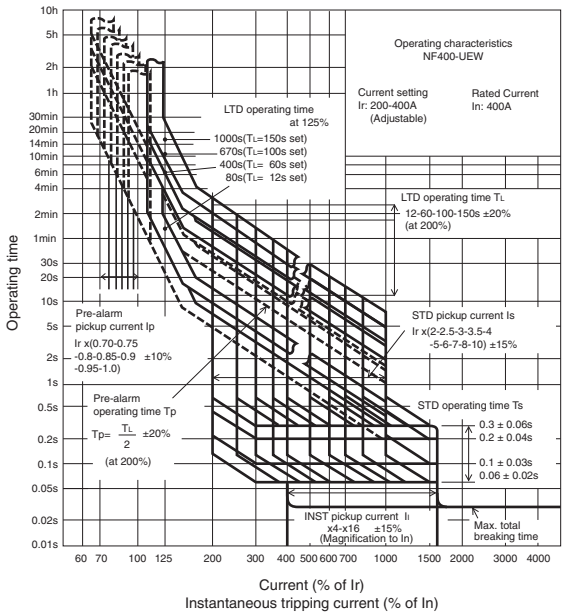


## Internal Accessories

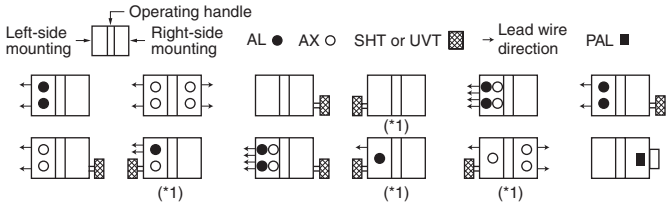


Note *1 Right-side mounting is standard of SHT and UVT. Specify separately for left-side mounting.
Remarks: 1. Specification of 4-pole model is same as that of NF800-UEW.
2. Refer to page 106.

## Current Reducing Curve

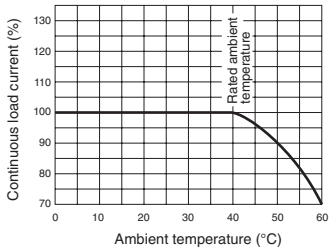


## External Accessories

| Accessories | | Type name | Reference page |
|---|---|---|---|
| Operating handle | F | F-4U | 119 |
| | V | V-4U | 121 |
| Mechanical interlock | MI | MI-4SW3 | 131 |
| Auxiliary handle | HT | HT-4SW | 130 |

| Accessories | | | | Type name | Reference page |
|---|---|---|---|---|---|
| Terminal cover | Large | TC-L | 3P | TCL-4SW3 | 123 |
| | Skeleton | TTC | 3P | – | |
| | Rear | BTC | 3P | BTC-4SW3 | |
| Handle lock device | | HL | | HL-4SW | 129 |
| | | HL-S | | HLS-4UW | |
| Electrical operation device | | | | (*1) | 135 |

Note *1 Specify the operation method and voltage. Order in combination with the breaker unit.
Remark *1 Specification of 4-pole model is same as that of NF800-UEW.

## Outline Drawing

### Front connection

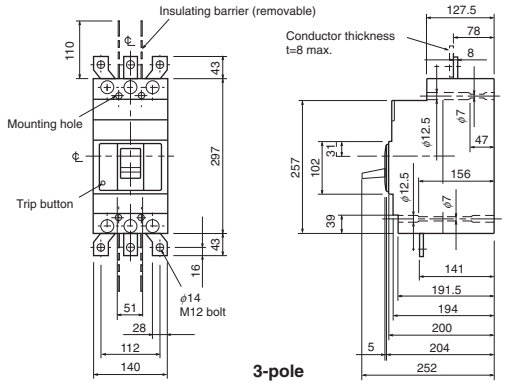


3-pole

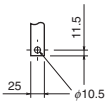


Conductor thickness t=8 max.

**Conductor drilling for direct connection**

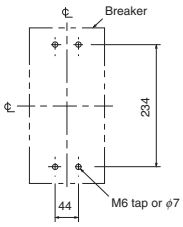


3-pole

**Drilling plan**

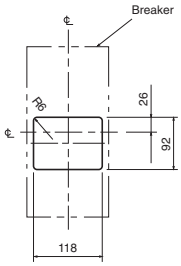


1.0mm clearance on each side of the handle frame.

**Front-panel cutout**

### Rear connection

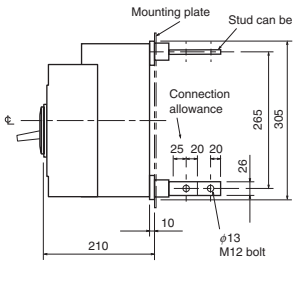


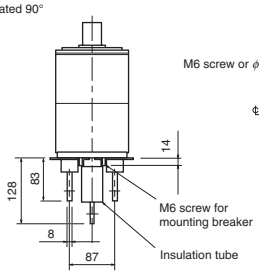


3-pole

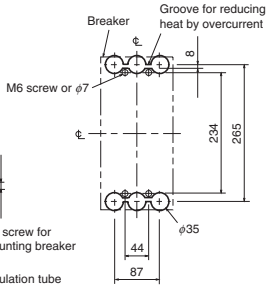


**Drilling plan**

**Boring dimensions for rear connection type barriers (3-pole)**

**Line side**

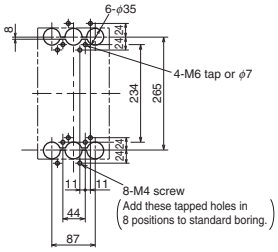


**Load side**

Note The bore dimensional drawing shows the breaker viewed from the rear.

### Plug-in

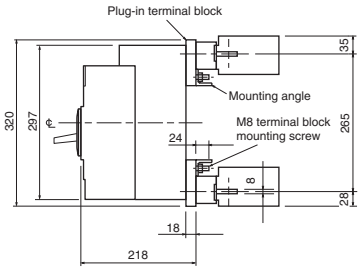


3-pole

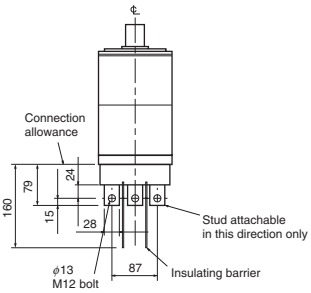


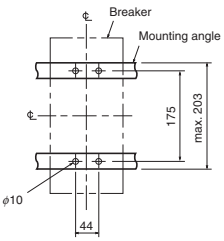


3-pole

**Drilling plan**

# NF630-CW
# NF630-SW

NF630-SW

| Model | | | | NF630-CW | | NF630-SW | | |
|---|---|---|---|---|---|---|---|---|
| Rated current In (A) | | | | 500 600 630 | | | | |
| Number of poles | | | | 2 | 3 | 2 | 3 | 4 |
| Rated insulation voltage Ui (V) | | | | 690 | | 690 | | |
| Rated short-circuit breaking capacity (kA) | IEC 60947-2 (Icu/Ics) | AC | 690V | – | | 10/10 | | |
| | | | 500V | 18/9 | | 30/30 | | |
| | | | 440V | 36/18 | | 42/42 | | |
| | | | 400V | 36/18 | | 50/50 | | |
| | | | 230V | 50/25 | | 85/85 | | |
| | | DC (*1) | 250V | 20/10 | | 40/40 | | |
| Standard attached parts (4-pole models are provided with auxiliary handle.) | | | Front connection | Mounting screw: M6×72 (4pcs) Insulating barrier: (2P: 2pcs, 3P: 4pcs, 4P: 6pcs) | | | | |
| | | | Rear connection | Mounting screw: M6×85 (4pcs) | | | | |

Note *1 When wired as shown at the bottom of page 14, 3-pole models can be used for up to 400VDC, and 4-pole models for up to 500VDC.

## Operating Characteristics

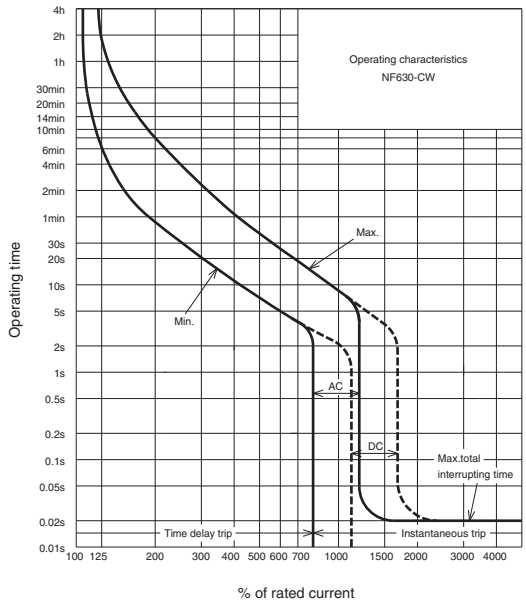


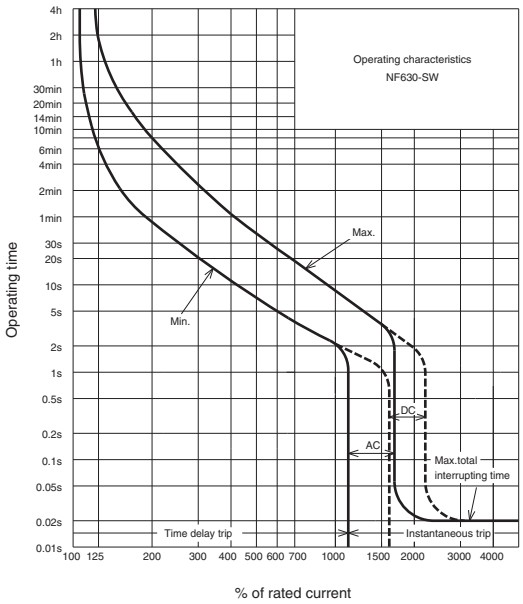


## Internal Accessories

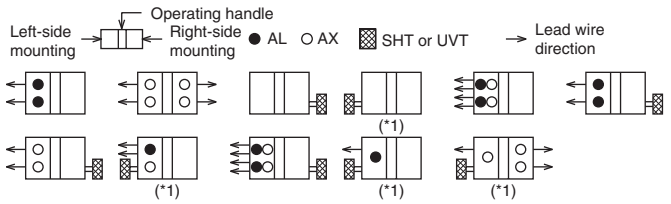


Note *1 Right-side mounting is standard of SHT and UVT. Specify separately for left-side mounting.
Remark: 1. Refer to page 106.

## Temperature Compensation Curve

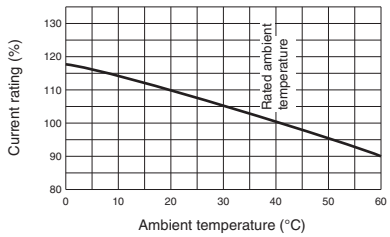


## External Accessories

| Accessories | | | Type name | Reference page |
|---|---|---|---|---|
| Operating handle | F | | F-4S | 119 |
| | V | | V-4S | 121 |
| Mechanical interlock | MI | 2, 3P | MI-4SW3 | 131 |
| | | 4P | MI-4SW4 | |
| Auxiliary handle | HT | | HT-4SW | 130 |

Note *1 Specify the operation method and voltage. Order in combination with the breaker unit.

| Accessories | | | | Type name | Reference page |
|---|---|---|---|---|---|
| Terminal cover | Large | TC-L | 2, 3P | TCL-4SW3 | 123 |
| | | | 4P | TCL-4SW4 | |
| | Skeleton | TTC | 2, 3P | TTC-4SW3 | |
| | | | 4P | TTC-4SW4 | |
| | Rear | BTC | 2, 3P | BTC-4SW3 | |
| | | | 4P | BTC-4SW4 | |
| Handle lock device | | HL | | HL-4SW | 129 |
| | | HL-S | | HLS-4SW | |
| Electrical operation device | | NFM | 3P | (*1) | 135 |
| | | | 4P | | |

## Outline Drawing

### Front connection

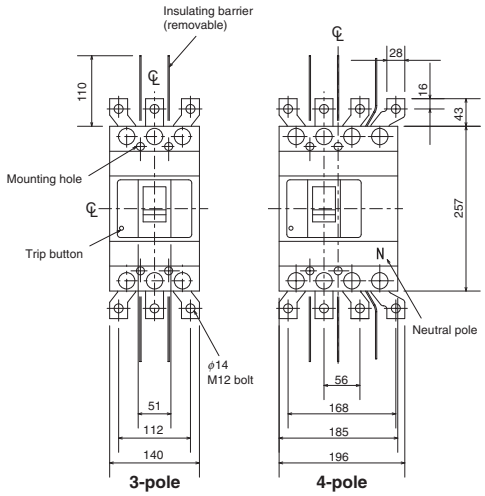


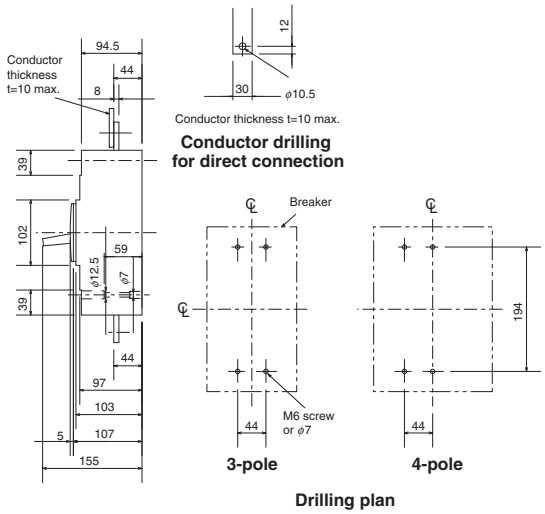


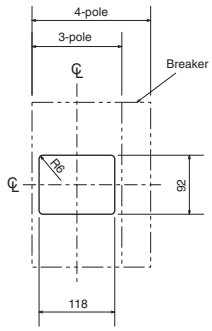


**Front-plate cutout**

### Rear connection

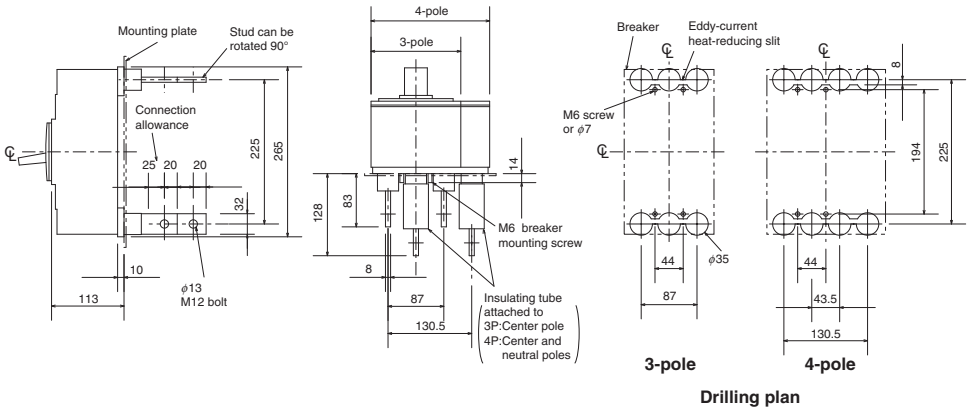


**Boring dimensions for rear connection type barriers (3-pole)**

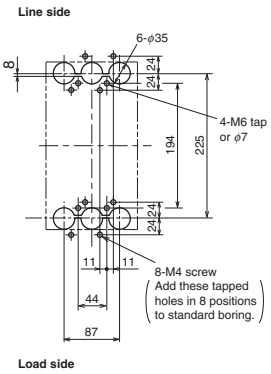


Note The bore dimensional drawing shows the breaker viewed from the rear.

### Plug-in

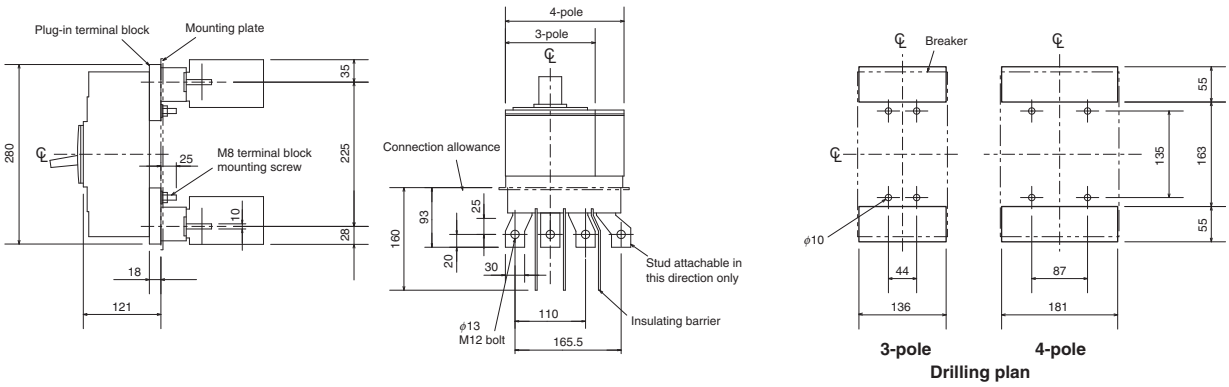


Remark: 1. 2-pole models are 3-pole models with the central pole removed.

# NF630-SEW
# NF630-HEW
# NF630-REW

NF630-SEW

| Model | | | | NF630-SEW | | NF630-HEW | | NF630-REW |
|---|---|---|---|---|---|---|---|---|
| Rated current In (A) | | | | 300-630 adjustable | | | | |
| Number of poles | | | | 3 | 4 | 3 | 4 | 3 |
| Rated insulation voltage Ui (V) | | | | 690 | | 690 | | 690 |
| Rated short-circuit breaking capacity (kA) | IEC 60947-2 (Icu/Ics) | AC | 690V | 10/10 | | 35/18 | | – |
| | | | 500V | 30/30 | | 50/50 | | 70/35 |
| | | | 440V | 42/42 | | 65/65 | | 125/63 |
| | | | 400V | 50/50 | | 70/70 | | 125/63 |
| | | | 230V | 85/85 | | 100/100 | | 150/75 |
| Standard attached parts (4-pole models are provided with auxiliary handle.) | | | Front connection | Mounting screw: M6×72 (4pcs) Insulating barrier: (3P: 4pcs, 4P: 6pcs) | | | | |
| | | | Rear connection | Mounting screw: M6×85 (4pcs) | | | | |

## Operating Characteristics

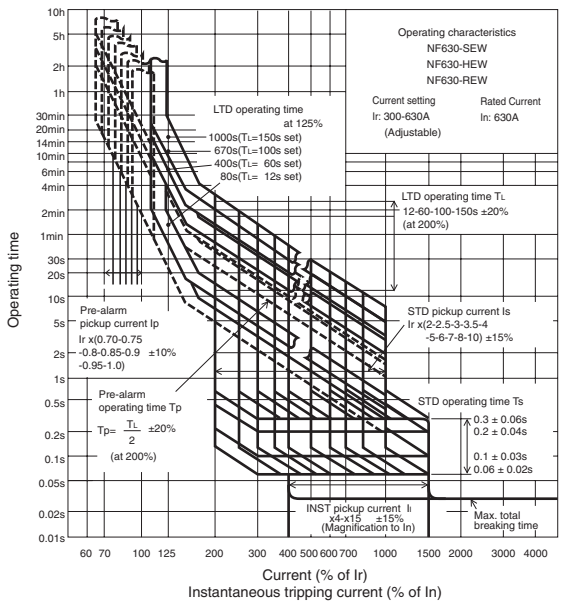


## Internal Accessories

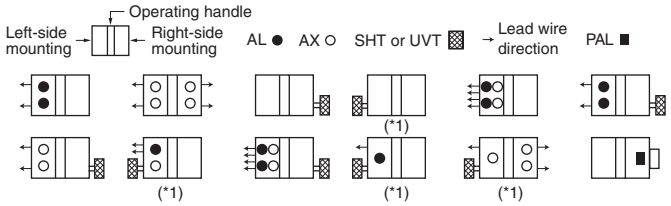


Note *1 Right-side mounting is standard of SHT and UVT. Specify separately for left-side mounting.
Remark: 1. Refer to page 106.

## Current Reducing Curve

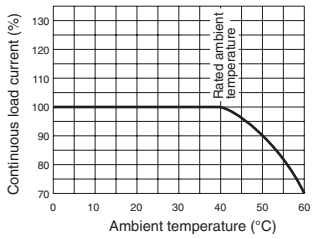


## External Accessories

| Accessories | | | Type name | Reference page |
|---|---|---|---|---|
| Operating handle | F | | F-4S | 119 |
| | V | | V-4S | 121 |
| Mechanical interlock | MI | 3P | MI-4SW3 | 131 |
| | | 4P | MI-4SW4 | |
| Auxiliary handle | HT | | HT-4SW | 130 |

| Accessories | | | | Type name | Reference page |
|---|---|---|---|---|---|
| Terminal cover | Large | TC-L | 3P | TCL-4SW3 (*2) | 123 |
| | | | 4P | TCL-4SW4 (*3) | |
| | Skeleton | TTC | 3P | TTC-4SW3 | |
| | | | 4P | TTC-4SW4 | |
| | Rear | BTC | 3P | BTC-4SW3 (*2) | |
| | | | 4P | BTC-4SW4 (*3) | |
| Handle lock device | | HL | | HL-4SW | 129 |
| | | HL-S | | HLS-4SW | |
| Electrical operation device | | NFM | 3P | (*1) | 135 |
| | | | 4P | | |

Notes *1 Specify the operation method and voltage. Order in combination with the breaker unit.
*2 This is for NF630-SEW.
*3 This is for NF630-SEW/HEW.

## Outline Drawing

### Front connection

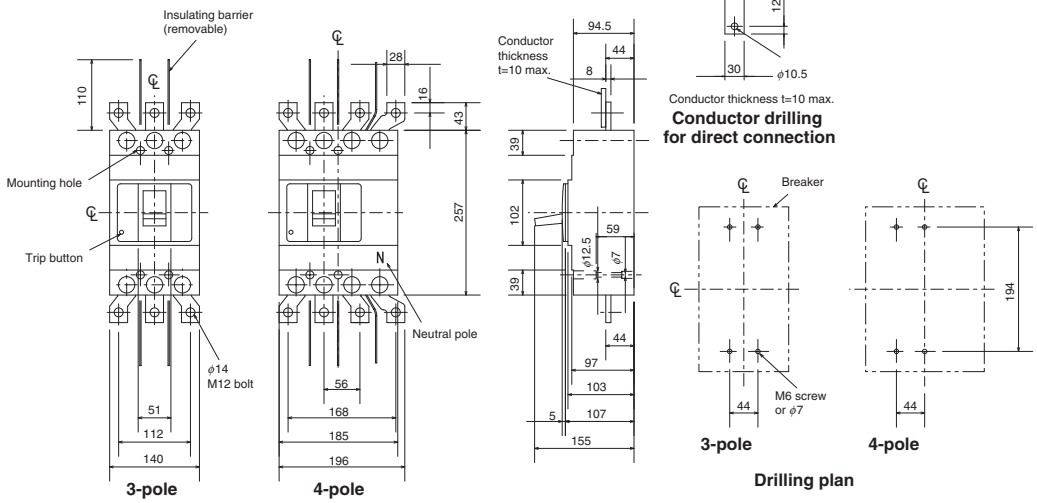


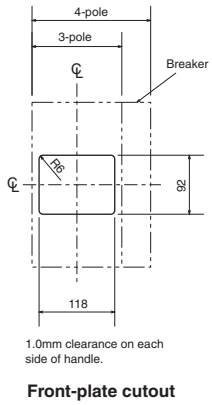


### Rear connection

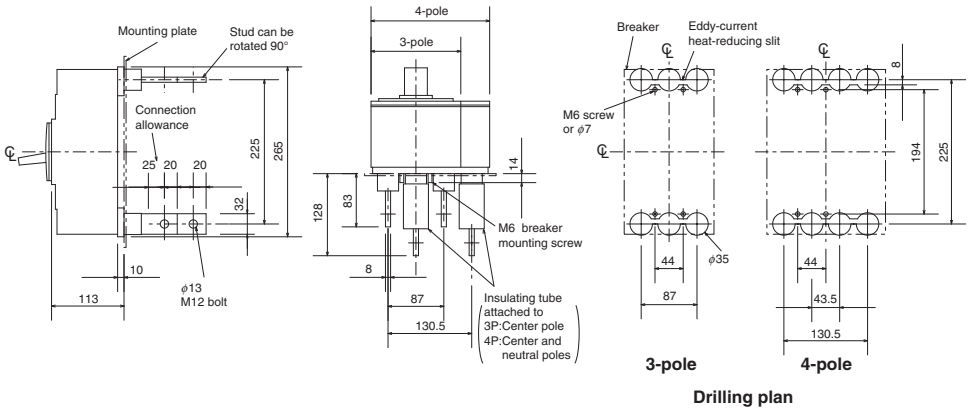


**Boring dimensions for rear connection type barriers (3-pole)**

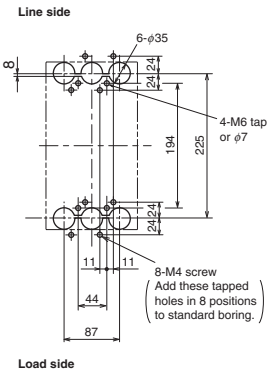


Note The bore dimensional drawing shows the breaker viewed from the rear.

### Plug-in

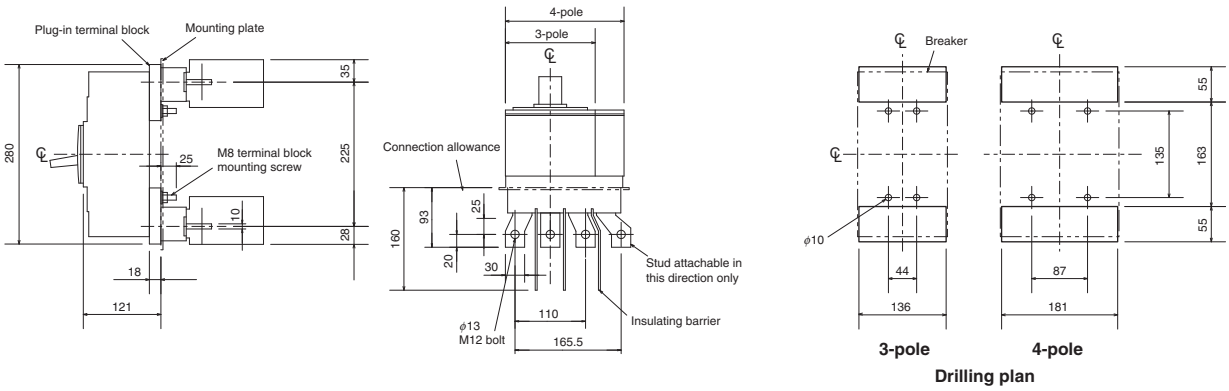

# NF800-CEW
# NF800-SEW
# NF800-HEW
# NF800-REW

NF800-SEW

| Model | | | | NF800-CEW | NF800-SEW | | NF800-HEW | | NF800-REW |
|---|---|---|---|---|---|---|---|---|---|
| Rated current In (A) | | | | 400-800 adjustable | | | | | |
| Number of poles | | | | 3 | 3 | 4 | 3 | 4 | 3 |
| Rated insulation voltage Ui (V) | | | | 690 | 690 | | 690 | | 690 |
| Rated short-circuit breaking capacity (kA) | IEC 60947-2 (Icu/Ics) | AC | 690V | – | 10/10 | | 15/15 | | – |
| | | | 500V | 18/9 | 30/30 | | 50/50 | | 70/35 |
| | | | 440V | 36/18 | 42/42 | | 65/65 | | 125/63 |
| | | | 400V | 36/18 | 50/50 | | 70/70 | | 125/63 |
| | | | 230V | 50/25 | 85/85 | | 100/100 | | 150/75 |
| Standard attached parts (4-pole models are provided with auxiliary handle.) | | | Front connection | Mounting screw: M6×35 (4pcs) Insulating barrier: (3P: 2pcs, 4P: 3pcs) | | | | | |
| | | | Rear connection | Mounting screw: M6×40 (4pcs) | | | | | |

## Operating Characteristics

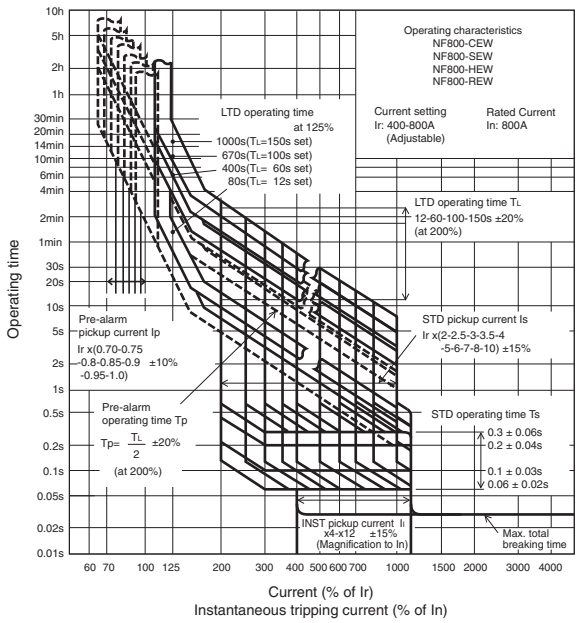


## Internal Accessories

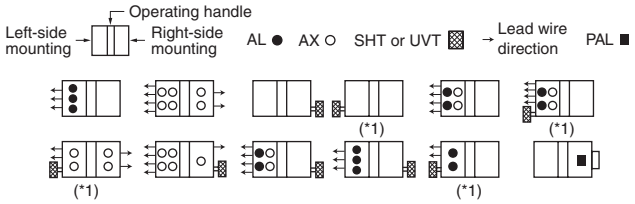


Note *1 Right-side mounting is standard of SHT and UVT. Specify separately for left-side mounting.
Remark: 1. Refer to page 106.

## Current Reducing Curve

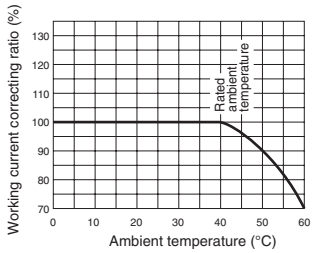


## External Accessories

| Accessories | | | Type name | Reference page |
|---|---|---|---|---|
| Operating handle | F | | F-8S | 119 |
| | V | | V-8S | 121 |
| Mechanical interlock | MI | 3P | MI-8SW3 | 131 |
| | | 4P | MI-8SW4 | |
| Auxiliary handle | HT | | HT-4SW | 130 |

| Accessories | | | | Type name | Reference page |
|---|---|---|---|---|---|
| Terminal cover | Large | TC-L | 3P | TCL-8SW3 | 123 |
| | | | 4P | TCL-8SW4 | |
| | Skeleton | TTC | 3P | TTC-8SW3 | |
| | | | 4P | TTC-8SW4 | |
| | Rear | BTC | 3P | BTC-8SW3 | |
| | | | 4P | BTC-8SW4 | |
| Handle lock device | | HL | | HL-4SW | 129 |
| | | HL-S | | HLS-8SW | |
| Electrical operation device | | NFM | 3P | (*1) | 135 |
| | | | 4P | | |

Note *1 Specify the operation method and voltage. Order in combination with the breaker unit.

## Outline Drawing

### Front connection

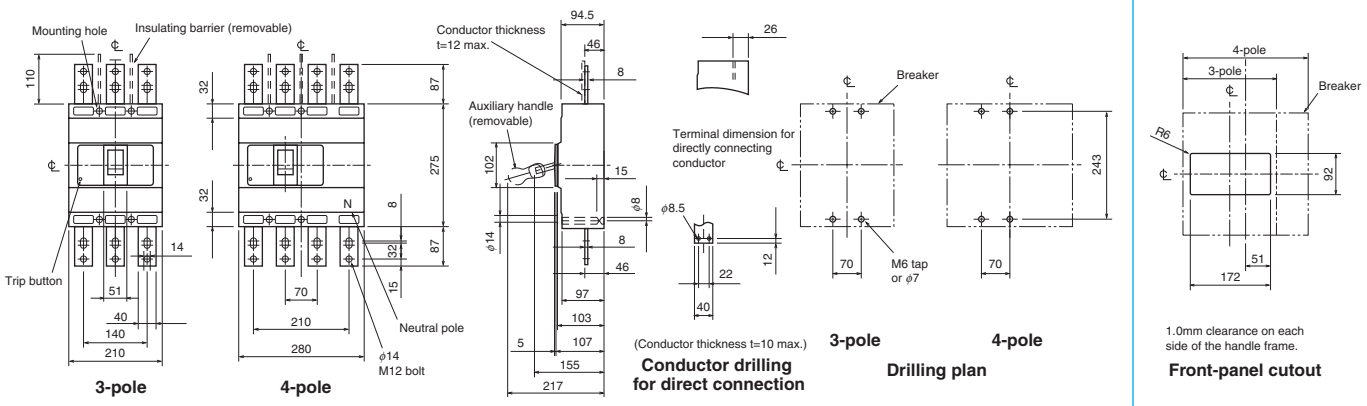


### Rear connection

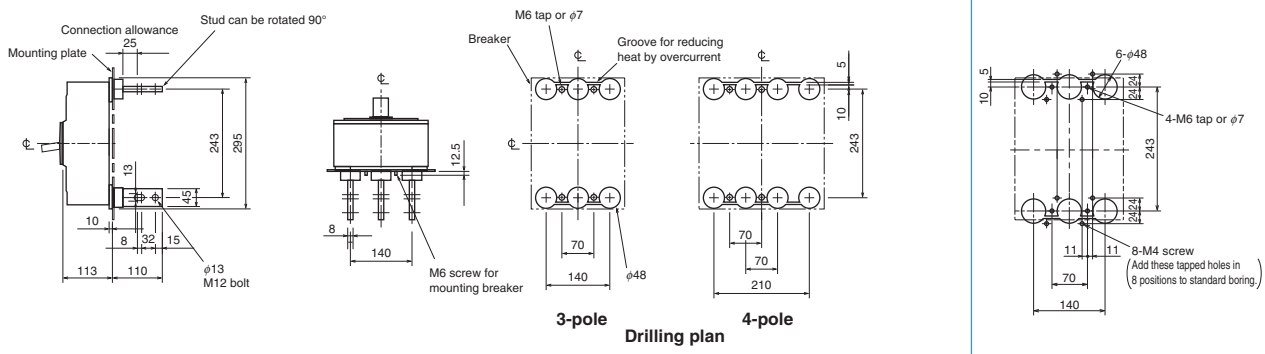


### Plug-in

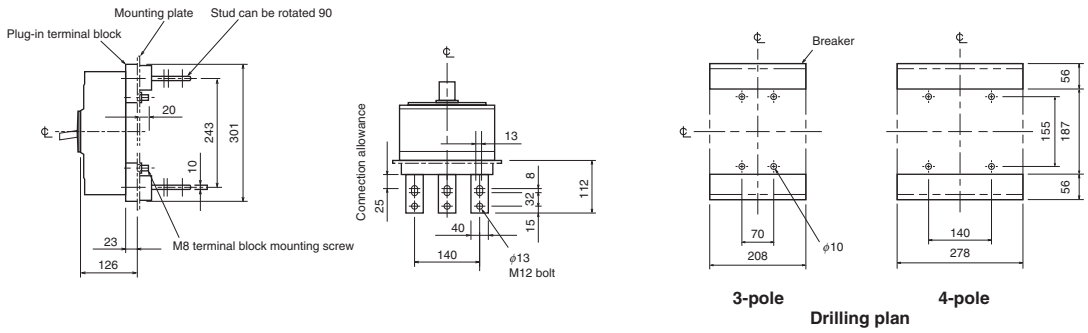

# NF800-SDW

NF800-SDW

| Model | | | | NF800-SDW |
|---|---|---|---|---|
| Rated current In (A) | | | | (700), 800 |
| Number of poles | | | | 2 |
| Rated insulation voltage Ui (V) | | | | 690 |
| Rated short-circuit breaking capacity (kA) | IEC 60947-2 (Icu/Ics) Time constant not larger than 10ms | DC | 250V | 40/40 |
| Standard attached parts (4-pole models are provided with auxiliary handle.) | | | Front connection | Mounting screw: M6×35 (4pcs)<br>Insulating barrier: (2P: 1pc, 3P: 2pcs, 4P: 3pcs) |
| | | | Rear connection | Mounting screw: M6×40 (4pcs) |

## Operating Characteristics

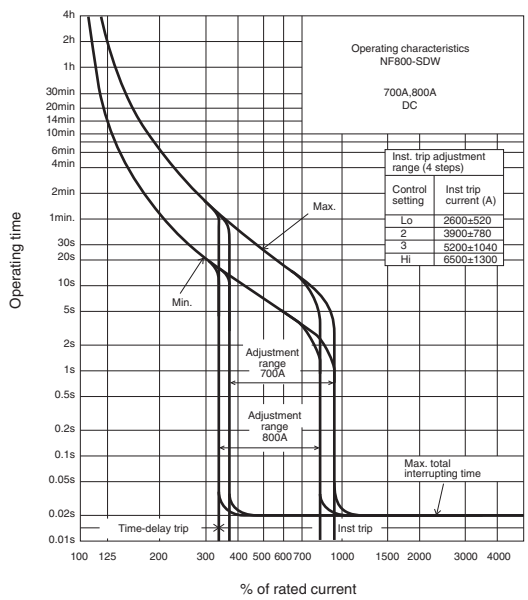


## Internal Accessories

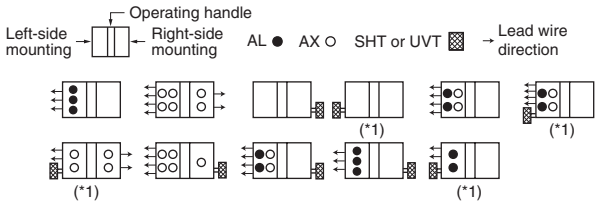


Note *1 Right-side mounting is standard of SHT and UVT. Specify separately for left-side mounting.
Remark: 1. Refer to page 106.

## Temperature Compensation Curve

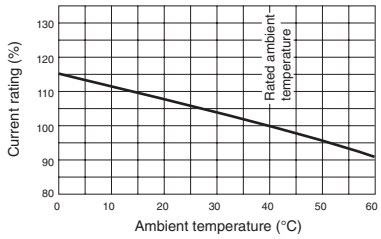


## External Accessories

| Accessories | | | Type name | Reference page |
|---|---|---|---|---|
| Operating handle | F | | F-8S | 119 |
| | V | | V-8S | 121 |
| Mechanical interlock | MI | 2, 3P | MI-8SW3 | 131 |
| | | 4P | MI-8SW4 | |
| Auxiliary handle | HT | | HT-4SW | 130 |

| Accessories | | | | Type name | Reference page |
|---|---|---|---|---|---|
| Terminal cover | Large | TC-L | 2, 3P | TCL-8SW3 | 123 |
| | | | 4P | TCL-8SW4 | |
| | Skeleton | TTC | 2, 3P | TTC-8SW3 | |
| | | | 4P | TTC-8SW4 | |
| | Rear | BTC | 2, 3P | BTC-8SW3 | |
| | | | 4P | BTC-8SW4 | |
| Handle lock device | | HL | | HL-4SW | 129 |
| | | HL-S | | HLS-8SW | |
| Electrical operation device | | NFM | 2, 3P | (*1) | 135 |
| | | | 4P | | |

Note *1 Specify the operation method and voltage. Order in combination with the breaker unit.

## Outline Drawing

### Front connection

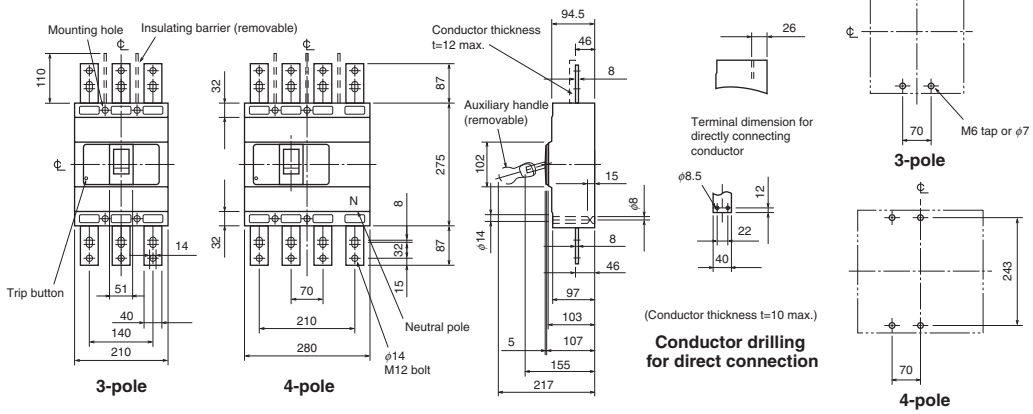


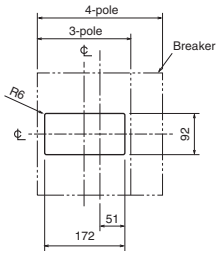


**Front-panel cutout**

### Rear connection

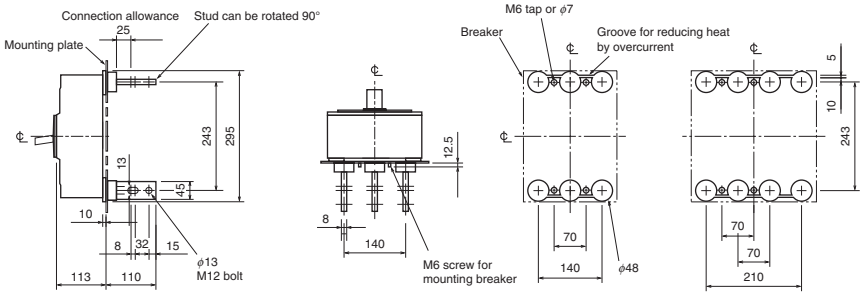


**Boring dimensions for rear connection type barriers (3-pole)**

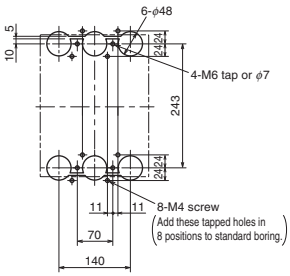


### Plug-in

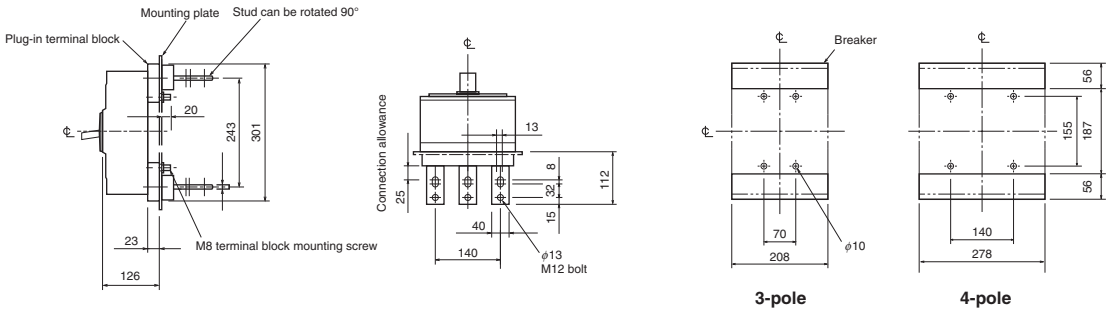


Remarks: 1. Standard specification of NF800-SDW is 2-pole model. 3-pole and 4-pole models are available for DC special voltage.
2. 2-pole models are 3-pole models with the central pole removed.

# NF800-UEW

NF800-UEW

| Model | | | | NF800-UEW | |
|---|---|---|---|---|---|
| Rated current In (A) | | | | 400-800 adjustable | |
| Number of poles | | | | 3 | 4 |
| Rated insulation voltage Ui (V) | | | | 690 | |
| Rated short-circuit breaking capacity (kA) | IEC 60947-2 (Icu/Ics) | AC | 690V | 35/35 | |
| | | | 500V | 170/170 | |
| | | | 440V | 200/200 | |
| | | | 400V | 200/200 | |
| | | | 230V | 200/200 | |
| Standard attached parts (4-pole models are provided with auxiliary handle.) | | | Front connection | Mounting screw: 3P: M6×35, M6×132 (2pcs each) 4P: M6×35 (3pcs), M6×132 (2pcs) Insulating barrier: (3P: 2pcs, 4P: 3pcs) | |
| | | | Rear connection | Mounting screw: 3P: M6×40, M6×137 (2pcs each) 4P: M6×40 (3pcs), M6×137 (2pcs) | |

## Operating Characteristics

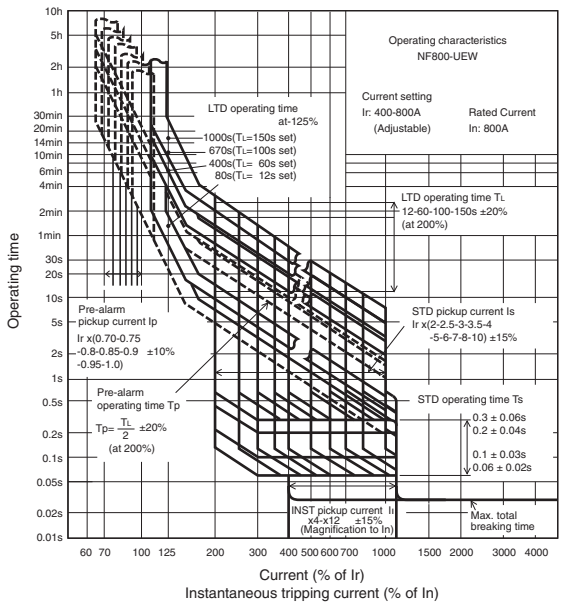


## Internal Accessories

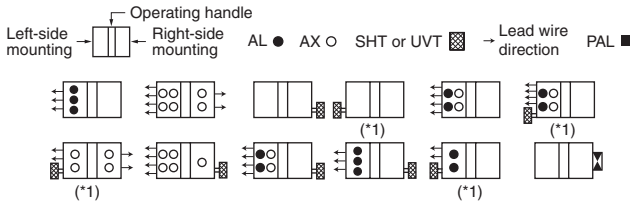


Note *1 Right-side mounting is standard of SHT and UVT. Specify separately for left-side mounting.
Remark: 1. Refer to page 106.

## Current Reducing Curve

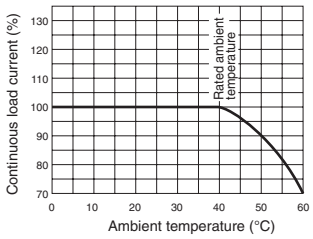


## External Accessories

| Accessories | | | Type name | Reference page |
|---|---|---|---|---|
| Operating handle | F | | F-8U | 119 |
| | V | | – | 121 |
| Mechanical interlock | MI | 3P | MI-8SW3 | 131 |
| | | 4P | MI-8SW4 | |
| Auxiliary handle | HT | | HT-4SW | 130 |

| Accessories | | | | Type name | Reference page |
|---|---|---|---|---|---|
| Terminal cover | Large | TC-L | 3P | TCL-8UW3 | 123 |
| | | | 4P | TCL-8UW4 | |
| | Skeleton | TTC | 3P | – | |
| | | | 4P | – | |
| | Rear | BTC | 3P | BTC-8SW3 | |
| | | | 4P | BTC-8SW4 | |
| Handle lock device | | HL | | HL-4SW | 129 |
| | | HL-S | | HLS-8UW | |
| Electrical operation device | | | | (*1) | 135 |

Note *1 Specify the operation method and voltage. Order in combination with the breaker unit.

## Outline Drawing

### Front connection

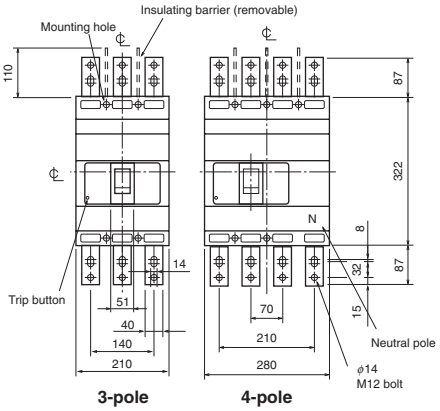


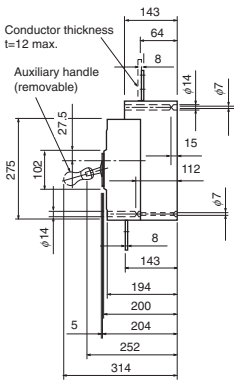


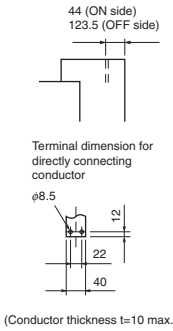


**Conductor drilling for direct connection**

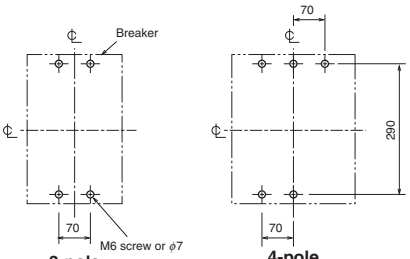


**Drilling plan**

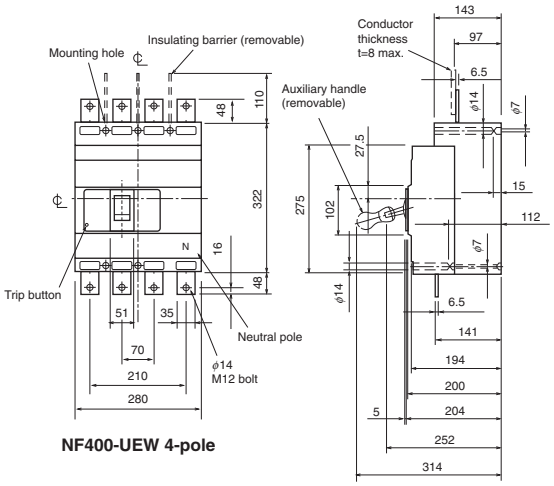


**NF400-UEW 4-pole**

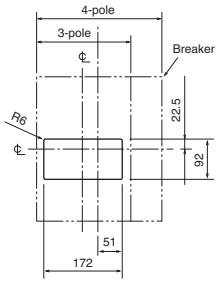


1.0mm clearance on each side of the handle frame.

**Front-panel cutout**

### Rear connection

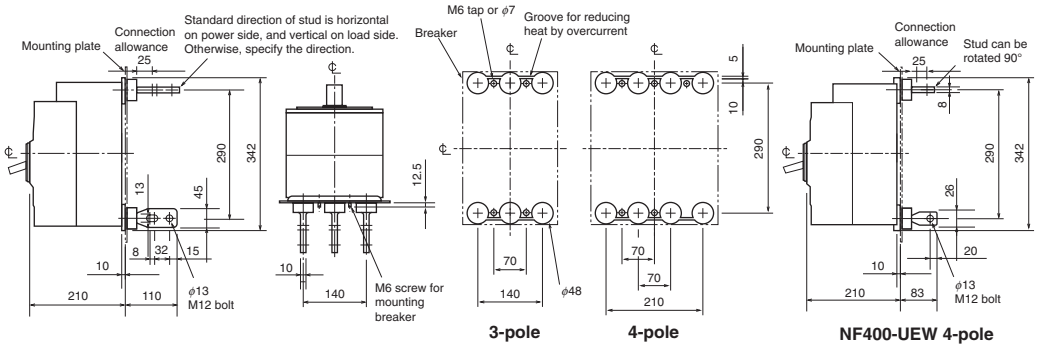


**Drilling plan**

**Boring dimensions for rear connection type barriers (3-pole)**

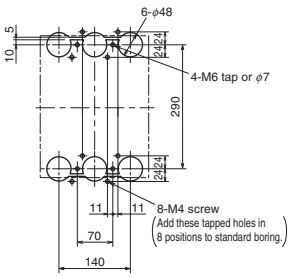

# NF1000-SEW
# NF1250-SEW

NF1250-SEW

| Model | | | | NF1000-SEW | | NF1250-SEW | |
|---|---|---|---|---|---|---|---|
| Rated current In (A) | | | | 500–1000 Adjustable | | 600–1250 Adjustable | |
| Number of poles | | | | 3 | 4 | 3 | 4 |
| Rated insulation voltage Ui (V) | | | | 690 | | 690 | |
| Rated short-circuit breaking capacity (kA) | IEC 60947-2 (Icu/Ics) | AC | 690V | 25/13 | | 25/13 | |
| | | | 500V | 65/33 | | 65/33 | |
| | | | 440V | 85/43 | | 85/43 | |
| | | | 400V | 85/43 | | 85/43 | |
| | | | 230V | 125/63 | | 125/63 | |
| Standard attached parts | | | Front connection | Mounting screw: M8×40 (4pcs)<br>Insulating barrier: (3P: 2pcs, 4P: 3pcs)<br>Auxiliary handle: (1pc) | | | |
| | | | Rear connection | Mounting screw: M8×40 (4pcs)<br>Insulating barrier: (3P: 2pcs, 4P: 4pcs)<br>Auxiliary handle: (1pc) | | | |

## Operating Characteristics

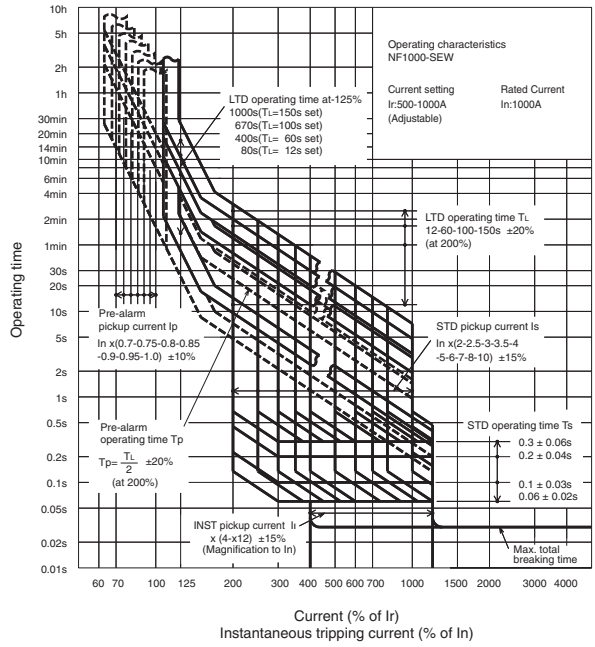


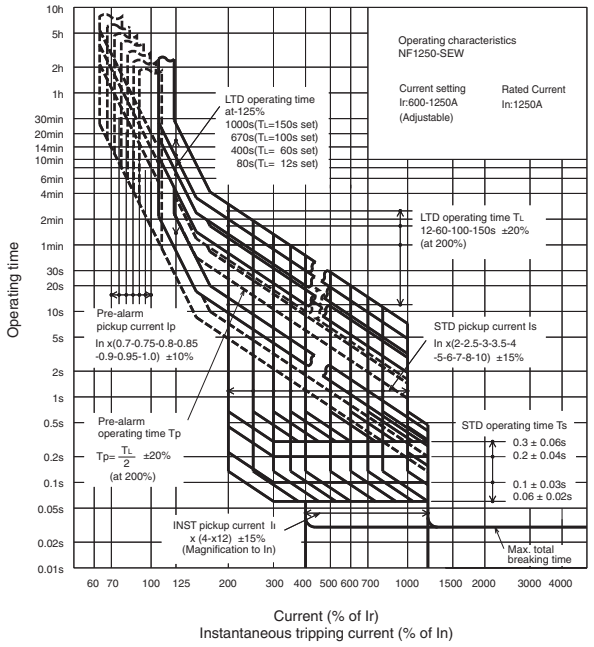


## Internal Accessories

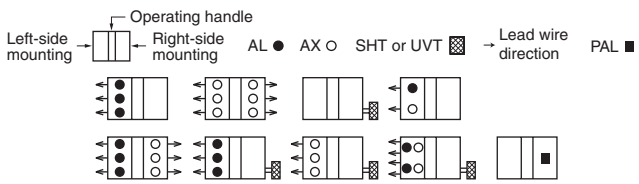


Remark: 1. Refer to page 106.

## Current Reducing Curve

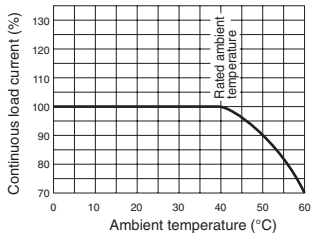


## External Accessories

(An order for ☆ should be placed at the same time as an order of circuit breaker main body.)

| Accessories | | | Type name | Reference page | Accessories | | | Type name | Reference page |
|---|---|---|---|---|---|---|---|---|---|
| Operating handle | F | 3P | F10SW | 119 | Auxiliary handle | HT | | HT-10SW | 130 |
| | | 4P | F10SW4P | | Handle lock device | HL | | HL (☆) | 129 |
| Mechanical interlock | MI | 3P | MI-10SW3 | 131 | Large terminal cover | TC-L | 3P | TCL-10SW3 | 123 |
| | | 4P | MI-10SW4 | | | | 4P | TCL-10SW4 | |
| | | | | | Electrical operation device | NFM | 3P<br>4P | (*1) | 135 |

Note *1 Specify the operation method and voltage. Order in combination with the breaker unit.

## Outline Drawing

### Front connection

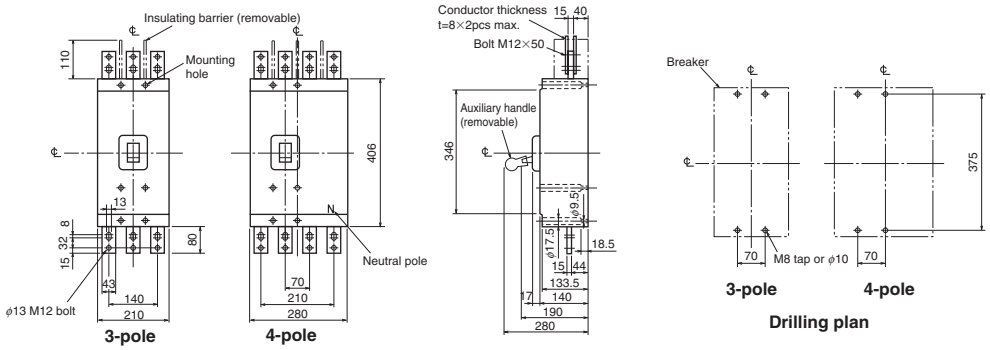


### Rear connection

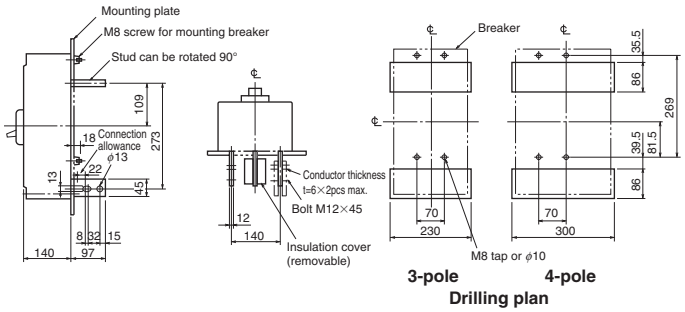


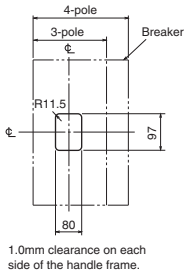


### Plug-in

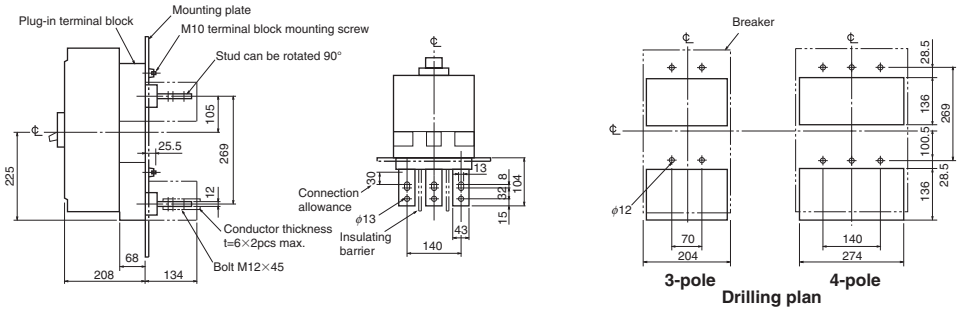

# NF1250-SDW

NF1250-SDW

| Model | | | | NF1250-SDW |
|---|---|---|---|---|
| Rated current In (Amp.) | | | | 1000, 1250 |
| Number of poles | | | | 2 |
| Rated insulation voltage Ui (V) | | | | 690 |
| Rated short-circuit breaking capacity (kA) | IEC 60947-2 (Icu/Ics) Time constant not large than 10ms | DC | 250V | 40/20 |
| Standard Attached parts | | | Front connection | Mounting screw: M8×40 (4pcs)<br>Insulating barrier: (2P: 1pc, 3P: 2pcs, 4P: 3pcs)<br>Auxiliary handle: (1pc) |
| | | | Rear connection | Mounting screw: M8×40 (4pcs)<br>Insulating barrier: (3P: 2pcs, 4P: 4pcs)<br>Auxiliary handle: (1pc) |

## Operating Characteristics

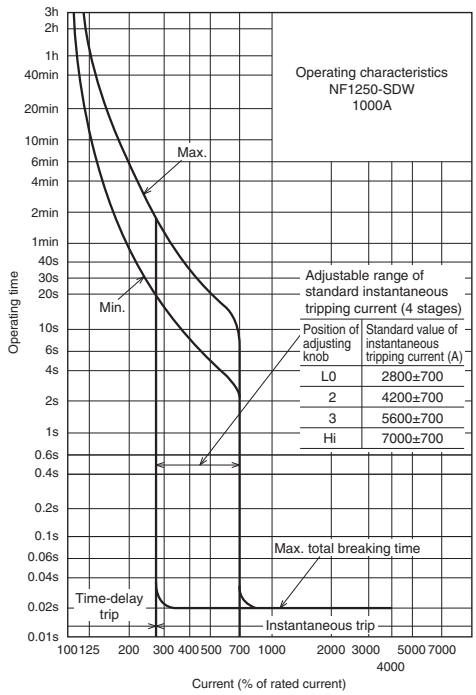


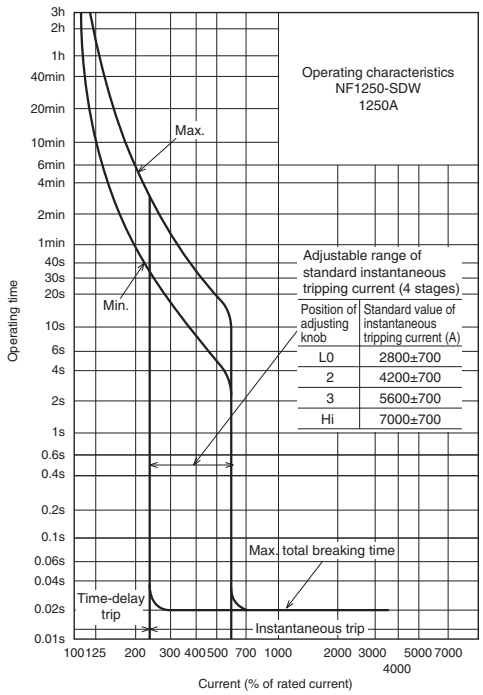


## Internal Accessories

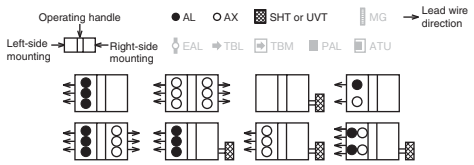


## Temperature Compensation Curve

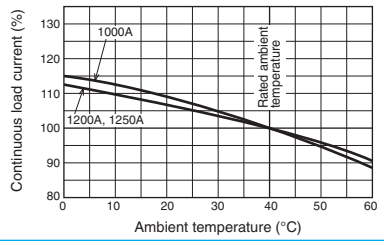


## External Accessories

(An order for ☆ should be placed at the same time as an order of circuit breaker main body.)

| Accessories | | | Type name | Reference page | Accessories | | | Type name | Reference page |
|---|---|---|---|---|---|---|---|---|---|
| Operating handle | F | 2, 3P | F10SW | 119 | Auxiliary handle | HT | | HT-10SW | 130 |
| | | 4P | F10SW4P | | Handle lock device | HL | | HL (☆) | 129 |
| Mechanical interlock | MI | 2, 3P | MI-10SW3 | 131 | Large terminal cover | TC-L | 2, 3P | TCL-10SW3 | 123 |
| | | 4P | MI-10SW4 | | | | 4P | TCL-10SW4 | |
| | | | | | Electrical operation device | NFM | 2, 3P | (*1) | 135 |
| | | | | | | | 4P | | |

Note *1 Specify the operation method and voltage. Order in combination with the breaker unit.

## Outline Drawing

### Front connection

Same dimensions as NF1000-SEW and NF1250-SEW.

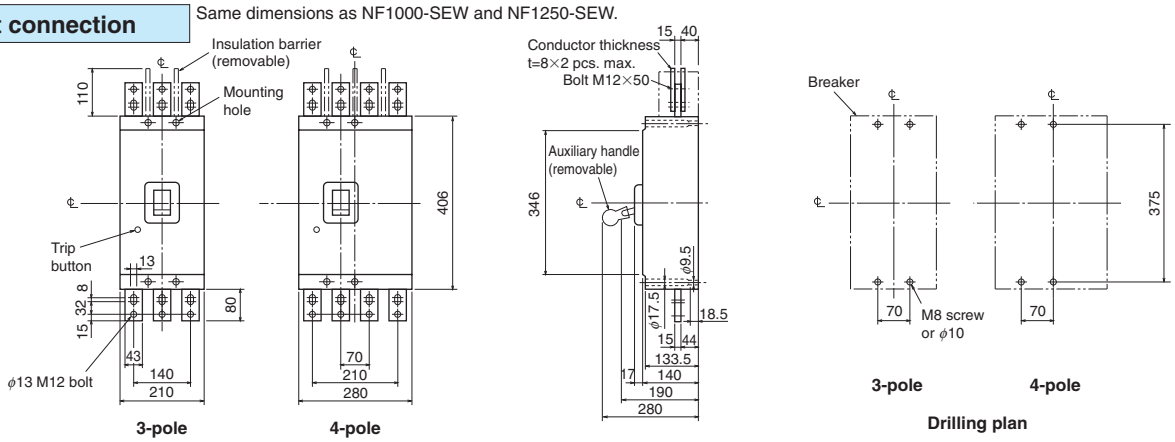


### Rear connection

Differing in external dimensions from NF1000-SEW and NF1250-SEW.

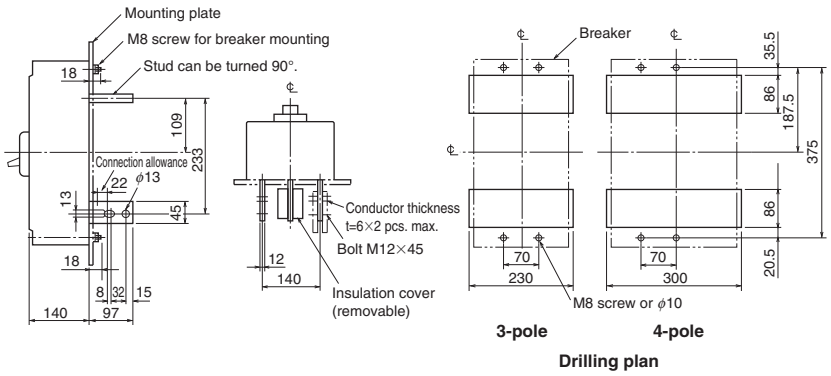


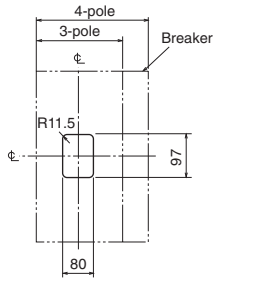


Front-panel cutout

### Plug-in

Differing in external dimensions from NF1000-SEW and NF1250-SEW.

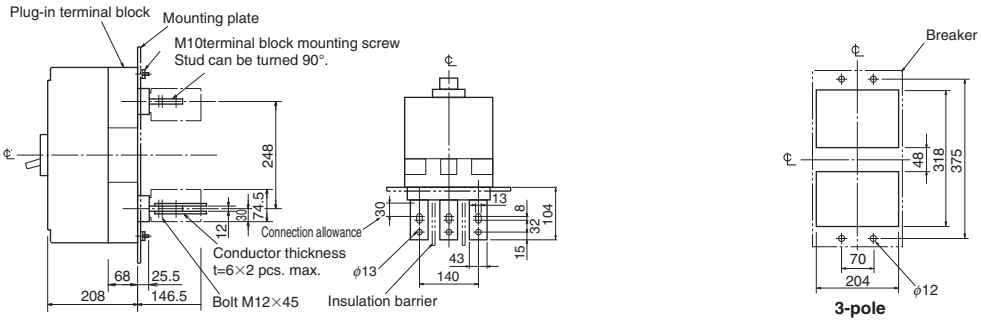


Drilling plan

Remarks: 1. Standard specification of NF1250-SDW is 2-pole model. 3-pole and 4-pole models are available for DC special voltage.
2. 2-pole models are 3-pole models with the central pole removed.

# NF1600-SEW

NF1600-SEW

| Model | | | | NF1600-SEW | |
|---|---|---|---|---|---|
| Rated current In (A) | | | | Adjustable 800–1600 | |
| Number of poles | | | | 3 | 4 |
| Rated insulation voltage Ui (V) | | | | 690 | |
| Rated short-circuit breaking capacity (kA) | IEC 60947-2 (Icu/Ics) | AC | 690V | 25/13 | |
| | | | 500V | 65/33 | |
| | | | 440V | 85/43 | |
| | | | 400V | 85/43 | |
| | | | 230V | 125/63 | |
| Standard attached parts | | | Front connection | Mounting screw: M8 × 40 (4pcs)<br>Insulating barrier: (3P: 2pcs, 4P: 3pcs)<br>Auxiliary handle: (1pc) | |
| | | | Rear connection | Mounting screw: M8 × 40 (4pcs)<br>Auxiliary handle: (1pc) | |

## Operating Characteristics

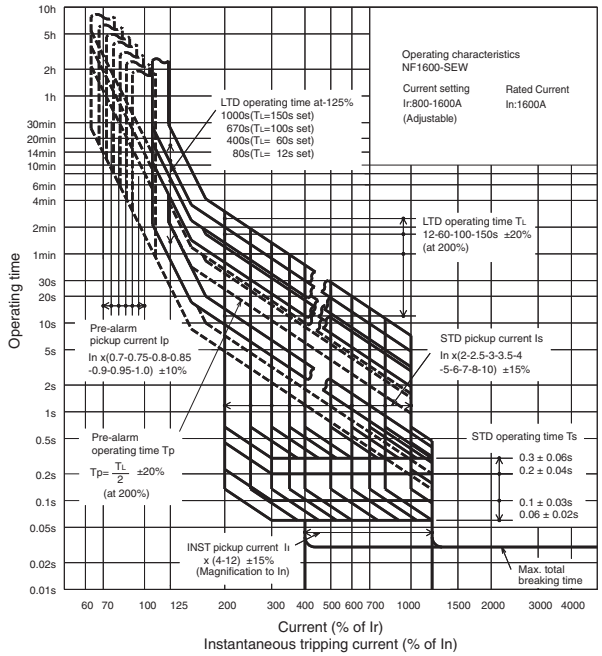


## Internal Accessories

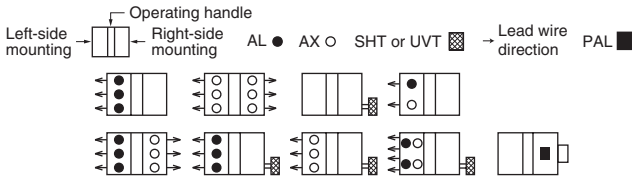


Remark: 1. Refer to page 106.

## Current Reducing Curve

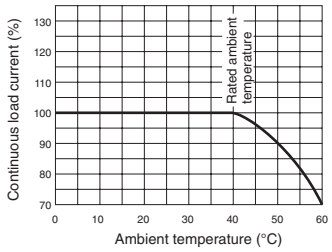


## External Accessories

(An order for ☆ should be placed at the same time as an order of circuit breaker main body.)

| Accessories | | | Type name | Reference page | Accessories | | | Type name | Reference page |
|---|---|---|---|---|---|---|---|---|---|
| Operating handle | F | 3P | F10SW | 119 | Auxiliary handle | HT | | HT-10SW | 130 |
| | | 4P | F10SW4P | | Handle lock device | HL | | HL (☆) | 129 |
| Mechanical interlock | MI | 3P | MI-16SW3 | 131 | Electrical operation device | NFM | 3P | (*1) | 135 |
| | | 4P | MI-16SW4 | | | | 4P | | |

Note *1 Specify the operation method and voltage. Order in combination with the breaker unit.

## Outline Drawing

### Front connection

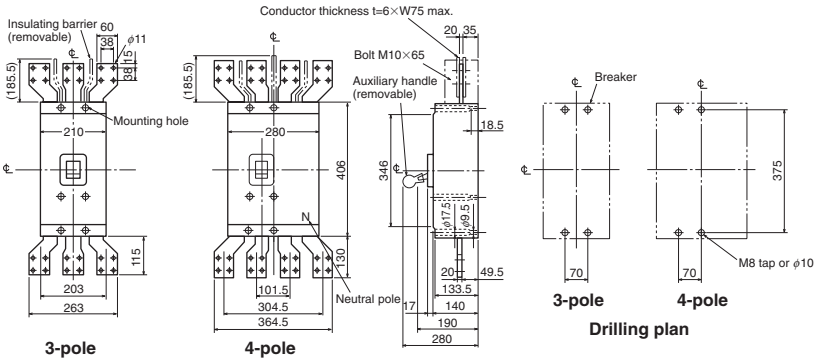


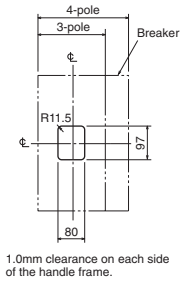


Front-panel cutout

### Rear connection

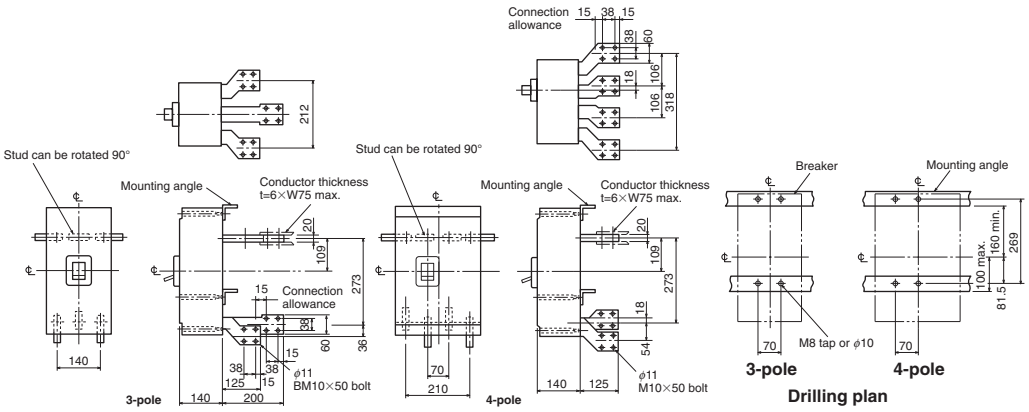

# NF1600-SDW

NF1600-SDW

| Model | | | | NF1600-SDW |
|---|---|---|---|---|
| Rated current In (Amp.) | | | | 1600 |
| Number of poles | | | | 2 |
| Rated insulation voltage Ui (V) | | | | 690 |
| Rated short-circuit breaking capacity (kA) | IEC 60947-2 (Icu/Ics) Time constant not large than 10msec | DC | 250V | 40/20 |
| Standard Attached parts | | | Front connection | Mounting screw: M8×40 (4pcs)<br>Insulating barrier: (2P: 1pc, 3P: 2pcs, 4P: 3pcs)<br>Auxiliary handle: (1pc) |
| | | | Rear connection | Mounting screw: M8×40 (4pcs)<br>Auxiliary handle: (1pc) |

## Operating Characteristics

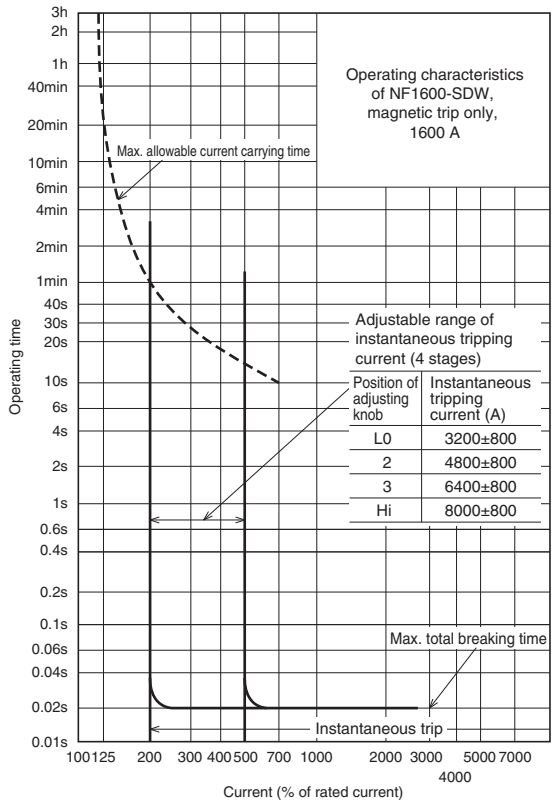


## Internal Accessories

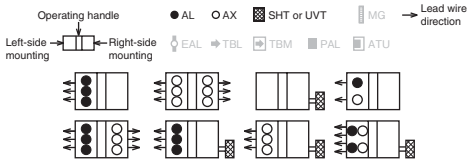


## External Accessories

(An order for ☆ should be placed at the same time as an order of circuit breaker main body.)

| Accessories | | | Type name | Reference page | Accessories | | | Type name | Reference page |
|---|---|---|---|---|---|---|---|---|---|
| Operating handle | F | 2, 3P | F10SW | 119 | Auxiliary handle | HT | | HT-10SW | 130 |
| | | 4P | F10SW4P | | Handle lock device | HL | | HL (☆) | 129 |
| Mechanical interlock | MI | 2, 3P | MI-16SW3 | 131 | Electrical operation device | NFM | 2, 3P | (*1) | 135 |
| | | 4P | MI-16SW4 | | | | 4P | | |

Note *1 Specify the operation method and voltage. Order in combination with the breaker unit.

## Outline Drawing

### Front connection

Same dimensions as NF1600-SEW.

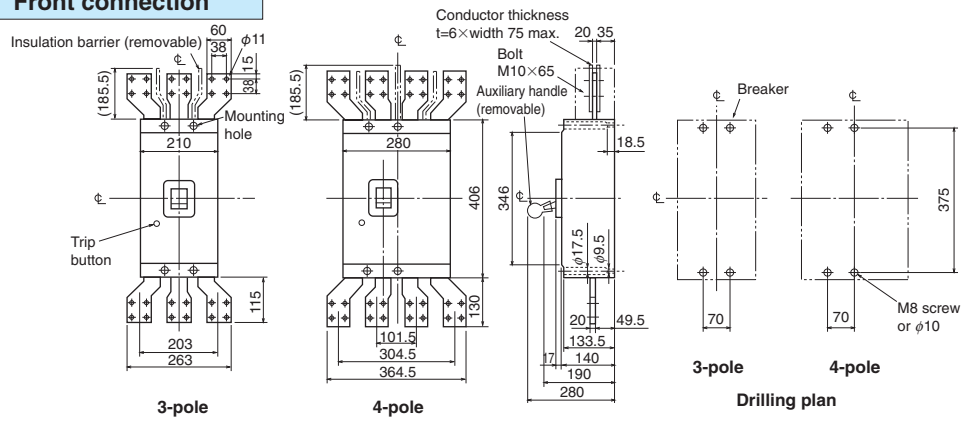


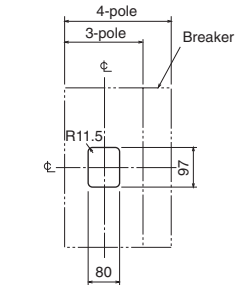


1.0mm clearance on each side of the handle frame

**Front-panel cutout**

### Rear connection

Differing in external dimensions from NF1600-SEW.

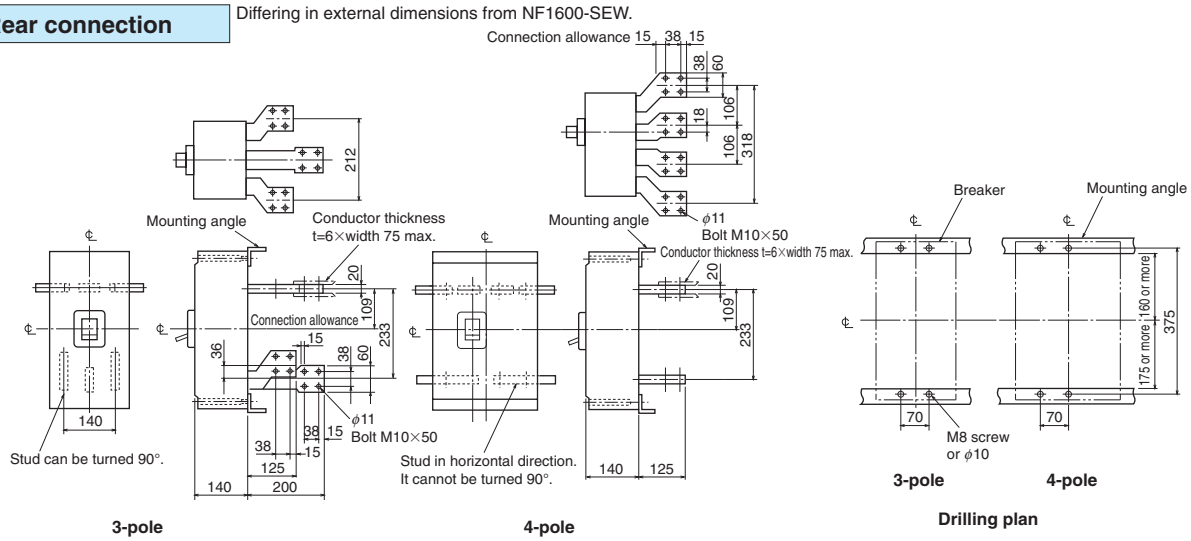


Remarks: 1. Standard specification of NF1600-SDW is 2-pole model. 3-pole and 4-pole models are available for DC special voltage.
2. 2-pole models are 3-pole models with the central pole removed.

# NV32-SV
# NV63-CV
# NV63-SV
# NV63-HV

NV63-SV

| Model | | | | NV32-SV | NV63-CV | | NV63-SV | | NV63-HV |
|---|---|---|---|---|---|---|---|---|---|
| Rated current In (A) | | | | (5) 6 10 (15) 16 20 25 (30) 32 | (5) (10) (15) 16 20 25 (30) 32 40 50 (60) 63 | | (5) (10) (15) 16 20 25 (30) 32 40 50 (60) 63 | | (15) 16 20 25 (30) 32 40 50 (60) 63 |
| Number of poles | | | | 3 | 2 | 3 | 2 | 3 | 3 |
| Phase line | | | | 3φ3W, 1φ2W | 1φ2W | 3φ3W, 1φ2W | 1φ2W | 3φ3W, 1φ2W | 3φ3W, 1φ2W |
| Rated operational voltage Ue (V) | | | AC | 100-440 | 100-240 | 100-440 | 100-240 | 100-440 | 100-440 |
| High-speed type | Rated current sensitivity (mA) | | | (15) 30 100/200/500 selectable | 30 | 15 30 100/200/500 selectable | (15) 30 | (15) 30 100/200/500 selectable | (15) 30 100/200/500 selectable |
| | Max operating time (s) | | at IΔn | 0.1 | 0.1 | | 0.1 | | 0.1 |
| | | | at 5IΔn | 0.04 | 0.04 | | 0.04 | | 0.04 |
| Time-delay type | Rated current sensitivity (mA) | | | – | – | | – | | – |
| | Max operating time (s) | | | – | – | | – | | – |
| | Inertial operating time (s) (or more) | | | – | – | | – | | – |
| Earth-leakage indication system | | | | Mechanical type (button) | Mechanical type (button) | | Mechanical type (button) | | Mechanical type (button) |
| Rated short-circuit breaking capacity (kA) | IEC 60947-2 (Icu/Ics) | AC | 440V | 5/5 | – | 2.5/2.5 | – | 7.5/7.5 | 10/8 |
| | | | 415V | 5/5 | – | 2.5/2.5 | – | 7.5/7.5 | 10/8 |
| | | | 400V | 5/5 | – | 5/5 | – | 7.5/7.5 | 10/8 |
| | | | 230V | 10/10 | 7.5/7.5 | | 15/15 | | 25/19 |
| | | | 200V | 10/10 | 7.5/7.5 | | 15/15 | | 25/19 |
| | | | 100V | 10/10 | 7.5/7.5 | | 15/15 | | 25/19 |
| Standard attached parts (Front connection) | | | | Mounting screw: M4×0.7×55 (2pcs) (*1) Insulation barrier: (2P: 1pc, 3P: 2pcs) | | | | | |

Note *1 Attached to NV63-SV and NV63-HV.

## Operating Characteristics

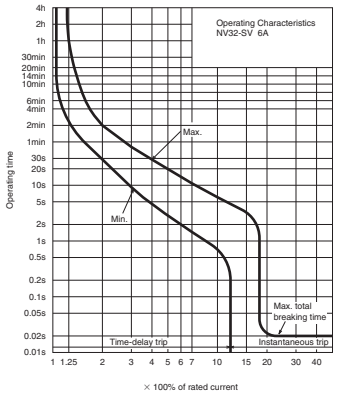


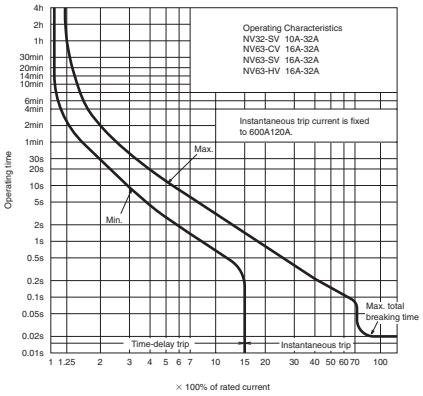


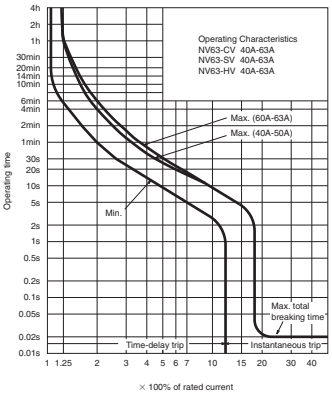


## Earth leakage Tripping Characteristics

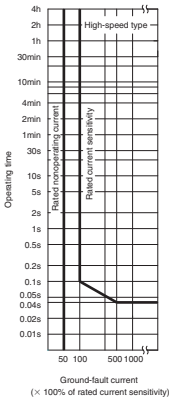


## Internal Accessories

## Temperature Compensation Curve

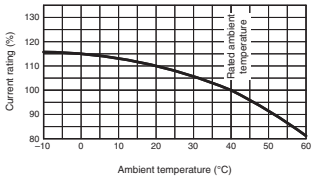


## Internal Wiring Diagram

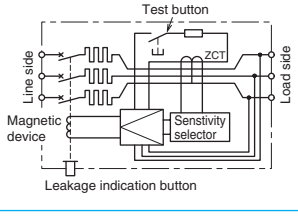


## External Accessories

| Accessories | | Type name | Reference page |
|---|---|---|---|
| Operating handle | F | F-05SV | 119 |
| | V | V-05SV | 121 |
| Handle lock device | LC | LC-05SV | 129 |
| | HL (*1) | HLF-05SV | |
| | | HLN-05SV | |
| | HL-S | HLS-05SV | |

Note *1 HLF types are used for OFF lock and HLN types for ON lock.

| Accessories | | | Type name | Reference page |
|---|---|---|---|---|
| Mechanical interlock | | MI | MI-05SV3 | 131 |
| Terminal cover | Small | TC-S | TCS-05SV3 | 123 |
| | Large | TC-L | TCL-05SV3 | |
| | | | TCL-05SV3L | |
| | Skeleton | TTC | TTC-05SV3 | |
| | Rear | BTC | BTC-05SV3 | |
| | Plug-in | PTC | PTC-05SV3 | |
| IEC 35mm rail mounting adapters | | | DIN-05SV | 139 |

## Outline Drawing

### Front connection

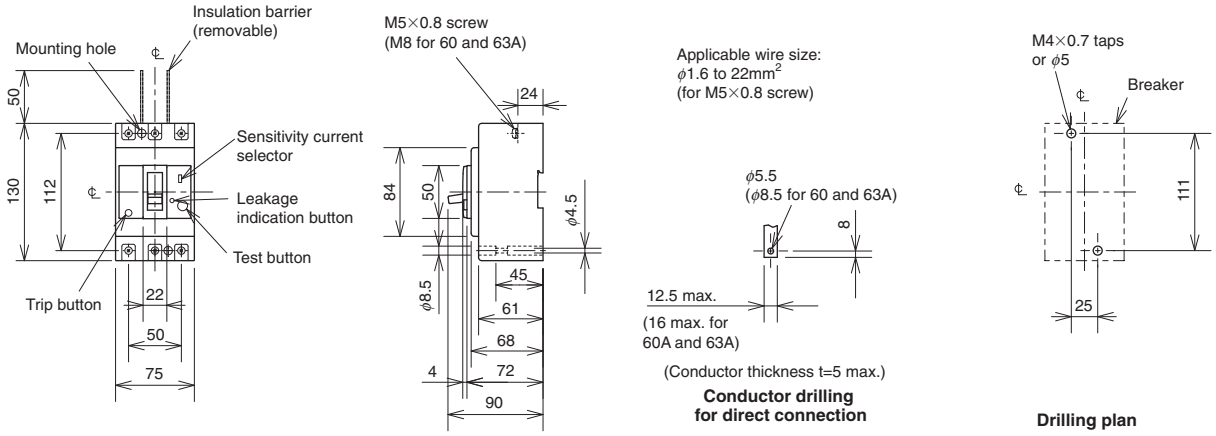


### Rear connection

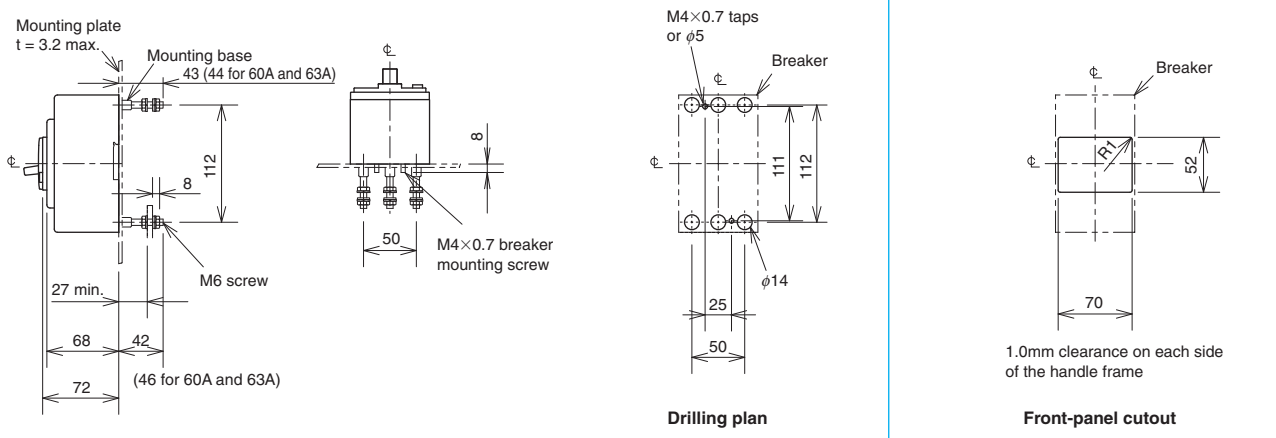


### Plug-in

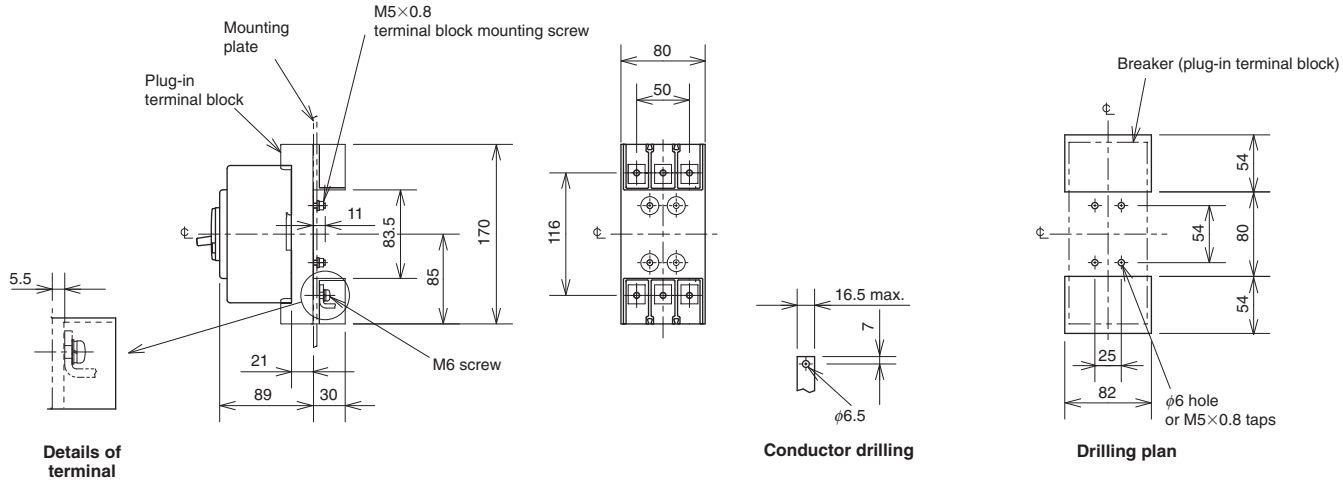


Remark: 1. 2-pole models are 3-pole models with the central pole removed.

# NV125-CV
# NV125-SV
# NV125-HV

NV125-SV

| Model | | | | NV125-CV | NV125-SV | | NV125-HV | |
|---|---|---|---|---|---|---|---|---|
| Rated current In (A) | | | | (60) 63 (75) 80 100 125 | (15) 16 20 30 32 40 50 (60) 63 (75) 80 100 125 | | (15) 16 20 (30) 32 40 50 (60) 63 75 80 100 125 | |
| Number of poles | | | | 3 | 3 | 4 | 3 | 4 |
| Phase line | | | | 3φ3W, 1φ2W | 3φ3W, 1φ2W | 3φ4W | 3φ3W, 1φ2W | 3φ4W |
| Rated operational voltage Ue (V) | | | AC | 100-440 | 100-440 | 200-440 | 100-440 | 200-440 |
| High-speed type | Rated current sensitivity (mA) | | | (15) 30 100/200/500 selectable | 30 100/200/500 selectable | | (30) 100/200/500 selectable | |
| | Max operating time (s) | | at IΔn | 0.1 | 0.1 | | 0.1 | |
| | | | at 5IΔn | 0.04 | 0.04 | | 0.04 | |
| Time-delay type | Rated current sensitivity (mA) | | | (100/200/500 selectable) | (100/200/500 selectable) | | (100/200/500 selectable) | |
| | Max operating time (s) | | | (0.45/1.0/2.0 selectable) | (0.45/1.0/2.0 selectable) | | (0.45/1.0/2.0 selectable) | |
| | Inertial operating time (s) (or more) | | | (0.1/0.5/1.0) | (0.1/0.5/1.0) | | (0.1/0.5/1.0) | |
| Earth-leakage indication system | | | | Mechanical type (button) | Mechanical type (button) | | Mechanical type (button) | |
| Rated short-circuit breaking capacity (kA) | IEC 60947-2 (Icu/Ics) | AC | 440V | 10/5 | 25/25 | | 50/38 | |
| | | | 415V | 10/5 | 30/30 | | 50/38 | |
| | | | 400V | 10/5 | 30/30 | | 50/38 | |
| | | | 230V | 30/15 | 50/50 | | 100/75 | |
| | | | 200V | 30/15 | 50/50 | | 100/75 | |
| | | | 100V | 30/15 | 50/50 | – | 100/75 | – |
| Standard attached parts (Front connection) | | | | Mounting screw: M4×0.7×55 (3P: 2pcs, 4P: 4pcs) (*1) Insulation barrier: (3P: 2pcs, 4P: 3pcs) | | | | |

Note *1 Attached to NV125-SV and NV125-HV.

## Operating Characteristics

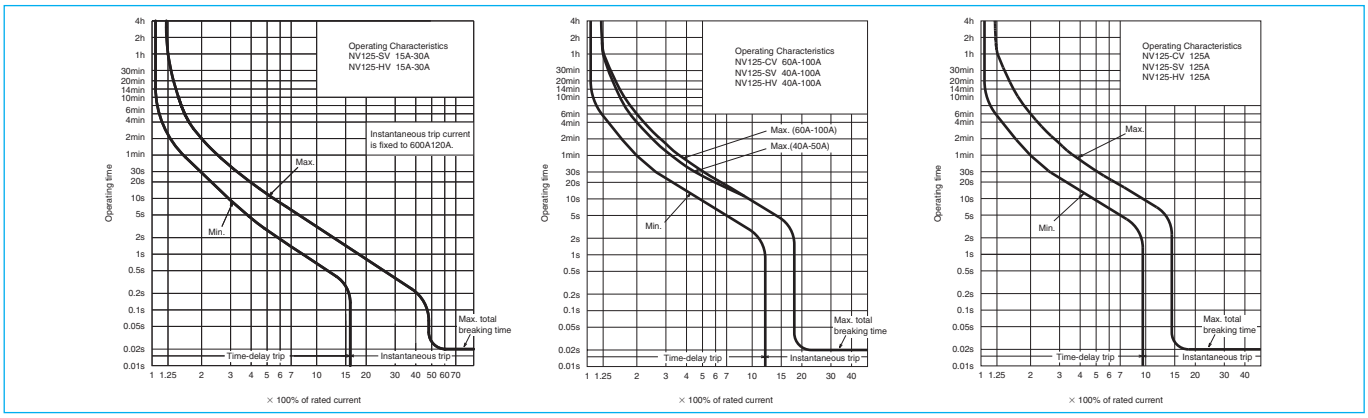


## Earth leakage Tripping Characteristics

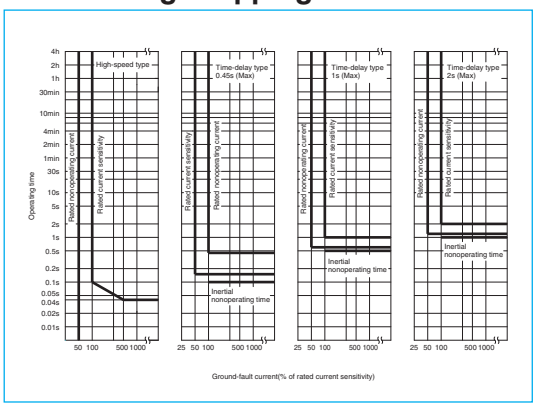


## Internal Accessories

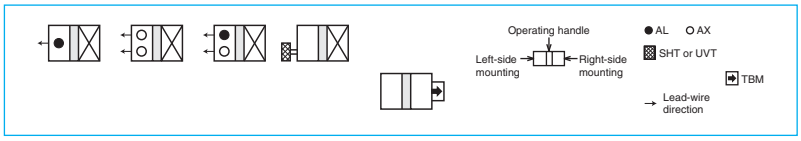


## Temperature Compensation Curve

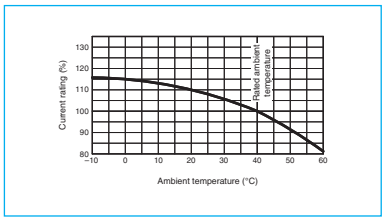


## Internal Wiring Diagram

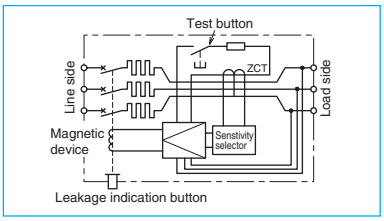


## External Accessories

| Accessories | | Type name | Reference page |
|---|---|---|---|
| Operating handle | F | F-1SV | 119 |
| | V | V-1SV | 121 |
| Handle lock device | LC | LC-05SV | 129 |
| | HL (*1) | HLF-05SV | |
| | | HLN-05SV | |
| | HL-S | HLS-05SV | |

Notes *1 HLF types are used for OFF lock and HLN types for ON lock.
*2 Specify the working voltage. Refer to the reference page for type name.

| Accessories | | | | Type name | Reference page |
|---|---|---|---|---|---|
| Mechanical interlock | | MI | 3P | MI-05SV3 | 131 |
| | | | 4P | MI-1SV4 | |
| Terminal cover | Small | TC-S | | TCS-1SV3 | 123 |
| | Large | TC-L | 3P | TCL-1SV3 | |
| | | | 4P | TCL-1SV4 | |
| | Skeleton | TTC | | TTC-1SV3 | |
| | Rear | BTC | | BTC-1SV3 | |
| | Plug-in | PTC | | PTC-1SV3 | |
| Electrical operation device | | | | (*2) | 135 |

## Outline Drawing

### Front connection

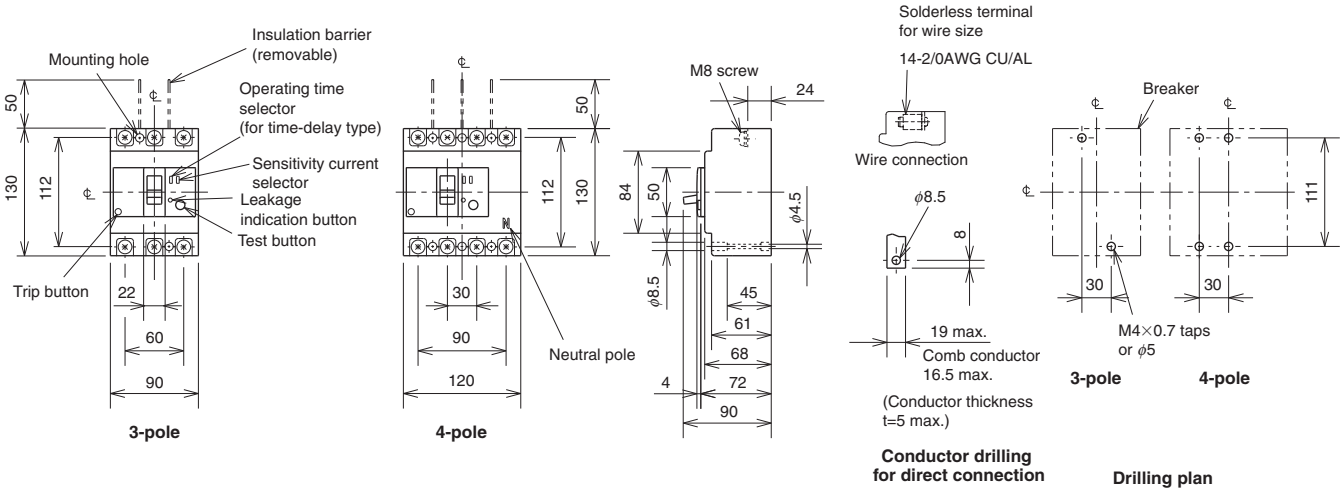


### Rear connection

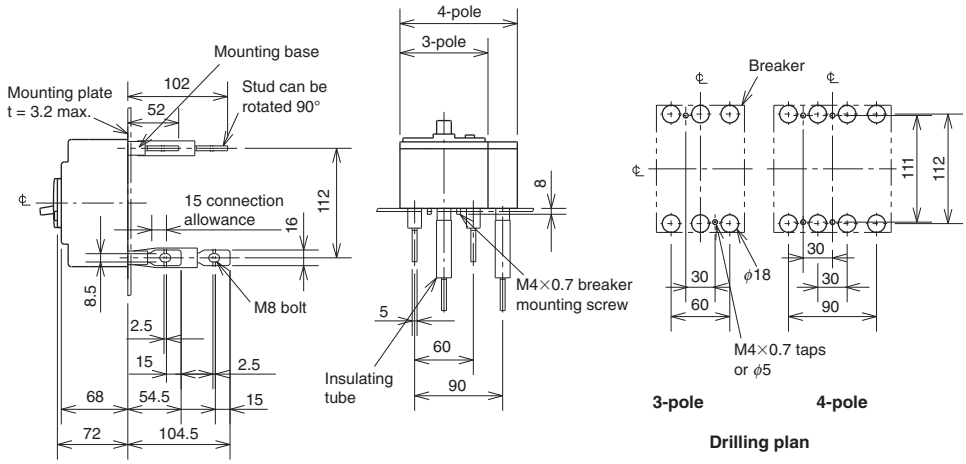


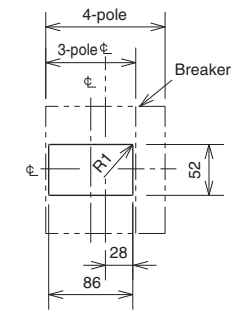


### Plug-in

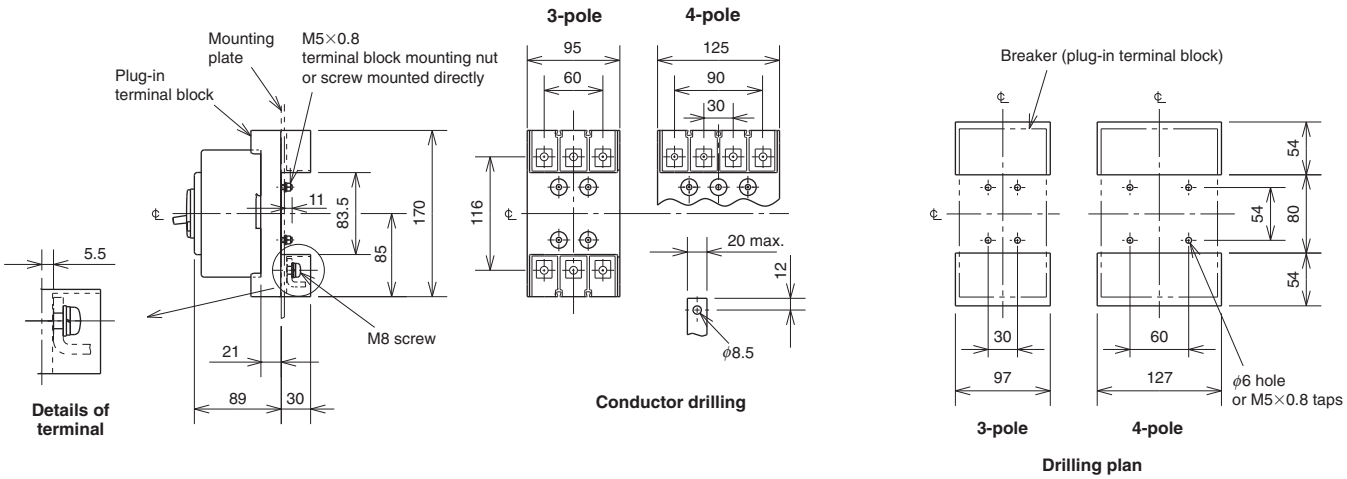


Remark: 1. Only 3-pole models are available for NV125-CV.

# NV250-CV
# NV250-SV
# NV250-HV

NV250-CV

| Model | | | | NV250-CV | NV250-SV | | NV250-HV | |
|---|---|---|---|---|---|---|---|---|
| Rated current In (A) | | | | 125 150 175 200 225 250 | 125 150 175 200 225 250 | | 125 150 175 200 225 250 | |
| Number of poles | | | | 3 | 3 | 4 | 3 | 4 |
| Phase line | | | | 3φ3W, 1φ2W | 3φ3W, 1φ2W | 3φ4W | 3φ3W, 1φ2W | 3φ4W |
| Rated operational voltage Ue (V) | | | AC | 100-440 | 100-440 | 200-440 | 100-440 | 200-440 |
| High-speed type | Rated current sensitivity (mA) | | | 30 100/200/500 selectable | (30) 100/200/500 selectable | | (30) 100/200/500 selectable | |
| | Max operating time (s) | | at IΔn | 0.1 | 0.1 | | 0.1 | |
| | | | at 5IΔn | 0.04 | 0.04 | | 0.04 | |
| Time-delay type | Rated current sensitivity (mA) | | | (100/200/500 selectable) | (100/200/500 selectable) | | (100/200/500 selectable) | |
| | Max operating time (s) | | | (0.45/1.0/2.0 selectable) | (0.45/1.0/2.0 selectable) | | (0.45/1.0/2.0 selectable) | |
| | Inertial operating time (s) (or more) | | | (0.1/0.5/1.0) | (0.1/0.5/1.0) | | (0.1/0.5/1.0) | |
| Earth-leakage indication system | | | | Mechanical type (button) | Mechanical type (button) | | Mechanical type (button) | |
| Rated short-circuit breaking capacity (kA) | IEC 60947-2 (Icu/Ics) | AC | 440V | 15/12 | 36/36 | | 65/65 | |
| | | | 415V | 25/19 | 36/36 | | 70/70 | |
| | | | 400V | 25/19 | 36/36 | | 75/75 | |
| | | | 230V | 36/27 | 85/85 | | 100/100 | |
| | | | 200V | 36/27 | 85/85 | | 100/100 | |
| | | | 100V | 36/27 | 85/85 | – | 100/100 | |
| Standard attached parts (Front connection) | | | | Mounting screw: M4×0.7×55 (3P: 2pcs, 4P: 4pcs) Insulation barrier: (3P: 4pcs, 4P: 6pcs) | | | | |

## Operating Characteristics

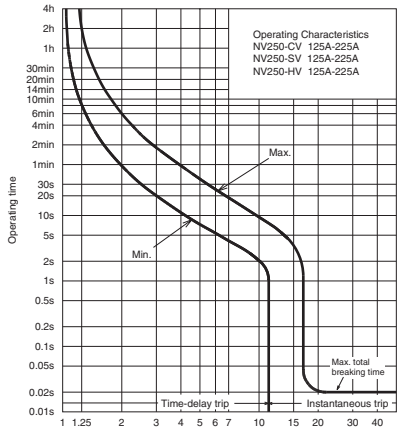


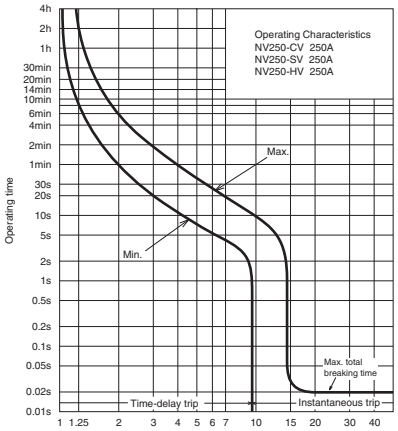


## Earth leakage Tripping Characteristics

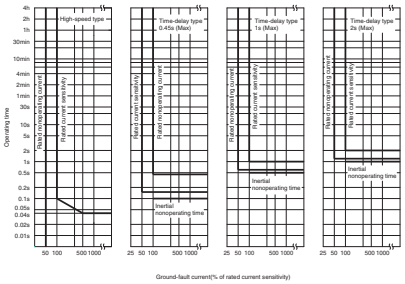

## Internal Accessories

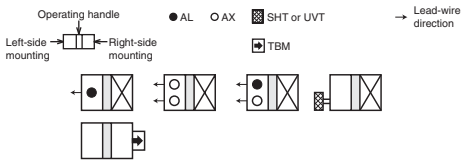


## Temperature Compensation Curve

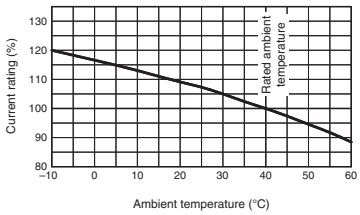


## Internal Wiring Diagram

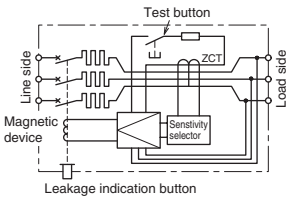


## External Accessories

| Accessories | | Type name | Reference page |
|---|---|---|---|
| Operating handle | F | F-2SV | 119 |
| | V | V-2SV | 121 |
| Handle lock device | LC | LC-05SV | 129 |
| | HL (*1) | HLF-05SV | |
| | | HLN-05SV | |
| | HL-S | HLS-2SV | |

| Accessories | | | | Type name | Reference page |
|---|---|---|---|---|---|
| Mechanical interlock | | MI | 3P | MI-05SV3 | 131 |
| | | | 4P | MI-2SV4 | |
| Terminal cover | Small | TC-S | 3P | TCS-2SV3 | 123 |
| | Large | TC-L | 3P | TCL-2SV3 | |
| | | | | TCL-2SV3L | |
| | | | 4P | TCL-2SV4 | |
| | Skeleton | TTC | 3P | TTC-2SV3 | |
| | Rear | BTC | 3P | BTC-2SV3 | |
| | Plug-in | PTC | 3P | PTC-2SV3 | |
| Electrical operation device | | | | (*2) | 135 |

Notes *1 HLF types are used for OFF lock and HLN types for ON lock.
*2 Specify the working voltage. Refer to the reference page for type name.

## Outline Drawing

### Front connection

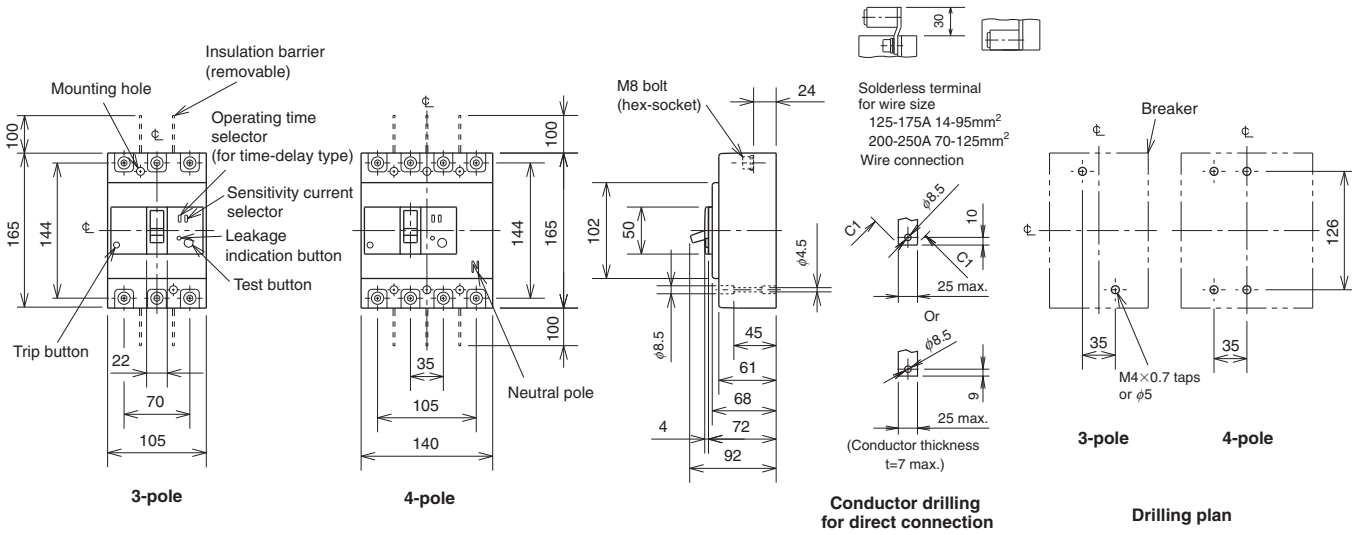


### Rear connection

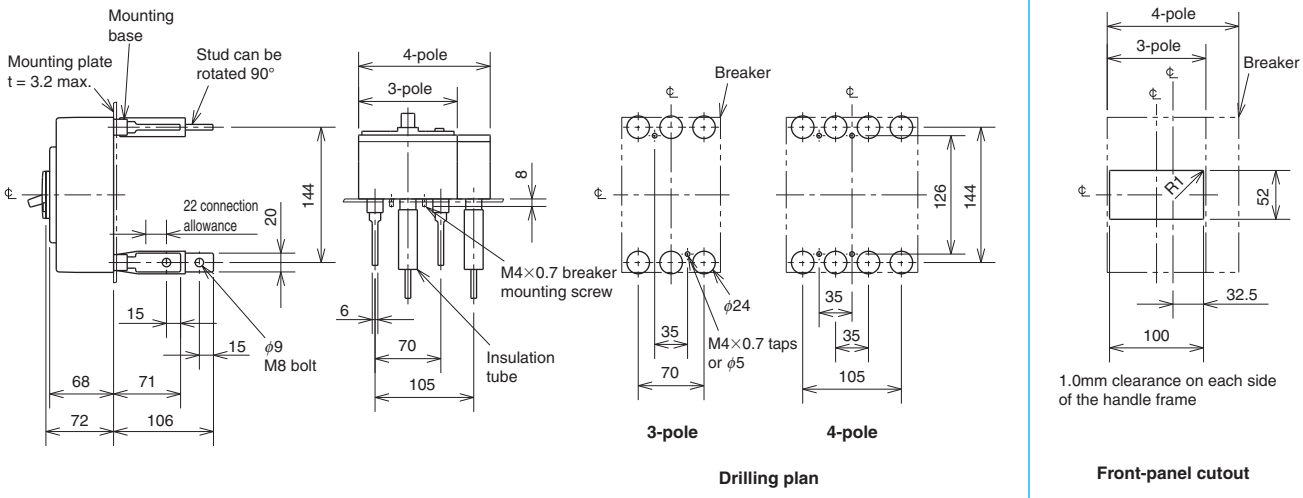


### Plug-in

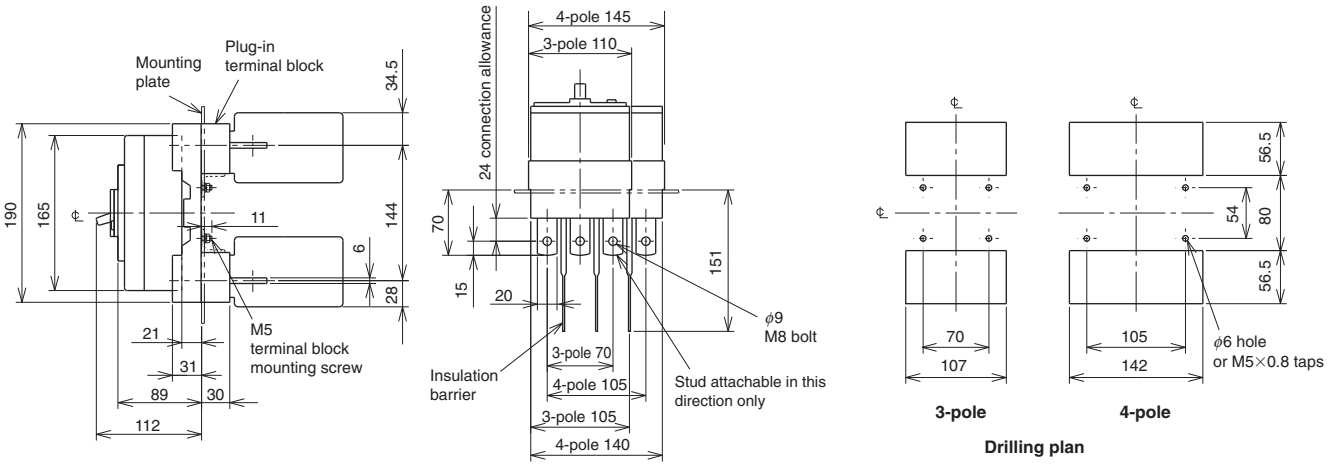


Remark: 1. Only 3-pole models are available for the model of NV250-CV.

# NV125-SEV
# NV125-HEV
# NV250-SEV
# NV250-HEV

NV250-SEV

| Model | | | | NV125-SEV | | NV125-HEV | | NV250-SEV | NV250-HEV |
|---|---|---|---|---|---|---|---|---|---|
| Rated current In (A) | | | | 125 | | 125 | | 250 | 250 |
| Current setting Ir (A) | | | | 63-125 | | 63-125 | | 125-250 | 125-250 |
| Number of poles | | | | 3 | 4 | 3 | 4 | 3 | 3 |
| Phase line type | | | | 3φ3W, 1φ2W | 3φ4W | 3φ3W, 1φ2W | 3φ4W | 3φ3W, 1φ2W | 3φ3W, 1φ2W |
| Rated operational voltage Ui | | | V | 440 | | 440 | | 440 | 440 |
| Rated operational voltage Ue (V) | | | AC | 100-440 | | 100-440 | | 100-440 | 100-440 |
| High-speed type | Rated current sensitivity (mA) | | | (30) 100/200/500 selectable | | (30) 100/200/500 selectable | | (30) 100/200/500 selectable | (30) 100/200/500 selectable |
| | Max operating time (s) | | at IΔn | 0.1 | | 0.1 | | 0.1 | 0.1 |
| | | | at 5IΔn | 0.04 | | 0.04 | | 0.04 | 0.04 |
| Time-delay type | Rated current sensitivity (mA) | | | (100/200/500 selectable) | | (100/200/500 selectable) | | (100/200/500 selectable) | (100/200/500 selectable) |
| | Max operating time (s) | | | (0.45/1.0/2.0 selectable) | | (0.45/1.0/2.0 selectable) | | (0.45/1.0/2.0 selectable) | (0.45/1.0/2.0 selectable) |
| | Inertial operating time (s) (or more) | | | (0.1/0.5/1.0) | | (0.1/0.5/1.0) | | (0.1/0.5/1.0) | (0.1/0.5/1.0) |
| Earth-leakage indication system | | | | Mechanical type (button) | | Mechanical type (button) | | Mechanical type (button) | Mechanical type (button) |
| Rated short-circuit breaking capacity (kA) | IEC 60947-2 (Icu/Ics) | AC | 440V | 36/36 | | 65/65 | | 36/36 | 65/65 |
| | | | 415V | 36/36 | | 70/70 | | 36/36 | 70/70 |
| | | | 400V | 36/36 | | 75/75 | | 36/36 | 75/75 |
| | | | 230V | 85/85 | | 100/100 | | 85/85 | 100/100 |
| | | | 200V | 85/85 | | 100/100 | | 85/85 | 100/100 |
| | | | 100V | 85/85 | | 100/100 | | 85/85 | 100/100 |
| Standard attached parts (Front connection) | | | | Mounting screw: M4×0.7×55 (3P: 2pcs, 4P: 4pcs) Insulation barrier: (3P: 4pcs, 4P: 6pcs) | | | | | |

## Operating Characteristics

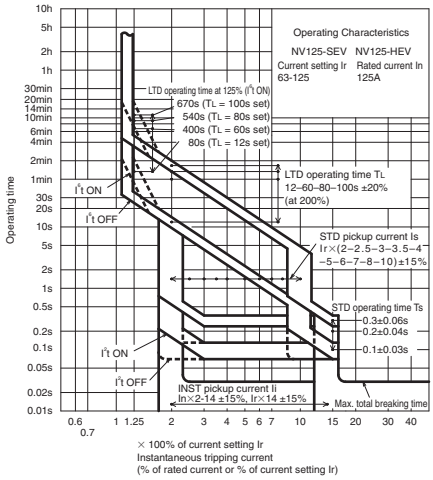


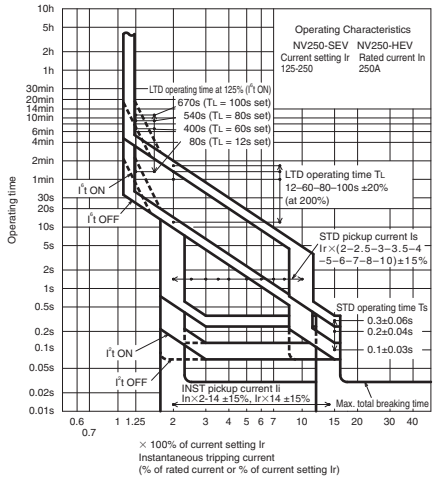


## Earth leakage Tripping Characteristics

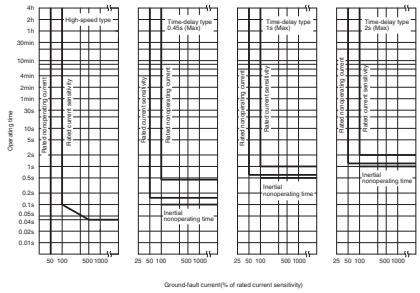


## Internal Accessories

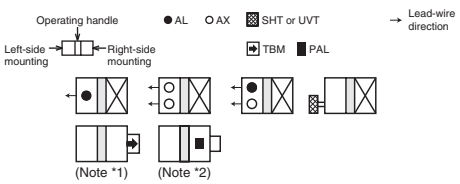


Notes *1 For the 24VDC TBM only instruct us of a control voltage. (The standard shared voltage is 100-240VAC/100-240VDC.)
*2 SLT-equipped is standard. Control voltage (100-200VAC) is necessary.

## Current Reducing Curve

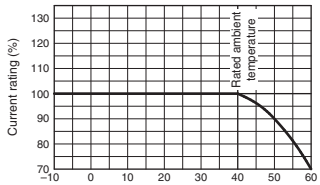


The rated current does not have thermal characteristics. Reduce the current as shown in the curve on the left chart if the ambient temperature exceeds 40°C.

## Internal Wiring Diagram

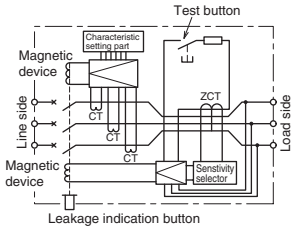


## External Accessories

| Accessories | | Type name | Reference page |
|---|---|---|---|
| Operating handle | F | F-2SV | 119 |
| | V | V-2SV | 121 |
| Handle lock device | LC | LC-05SV | 129 |
| | HL (*1) | HLF-05SV | |
| | | HLN-05SV | |
| | HL-S | HLS-2SV | |

Notes *1 HLF types are used for OFF lock and HLN types for ON lock.
*2 Specify the working voltage. Refer to the reference page for type name.

| Accessories | | | | Type name | Reference page |
|---|---|---|---|---|---|
| Mechanical interlock | | MI | 3P | MI-05SV3 | 131 |
| | | | 4P | MI-2SV4 | |
| Terminal cover | Small | TC-S | 3P | TCS-2SV3 | 123 |
| | Large | TC-L | 3P | TCL-2SV3 | |
| | | | | TCL-2SV3L | |
| | | | 4P | TCL-2SV4 | |
| | Skeleton | TTC | 3P | TTC-2SV3 | |
| | Rear | BTC | 3P | BTC-2SV3 | |
| | Plug-in | PTC | 3P | PTC-2SV3 | |
| Electrical operation device | | | | (*2) | 135 |

## Outline Drawing

### Front connection

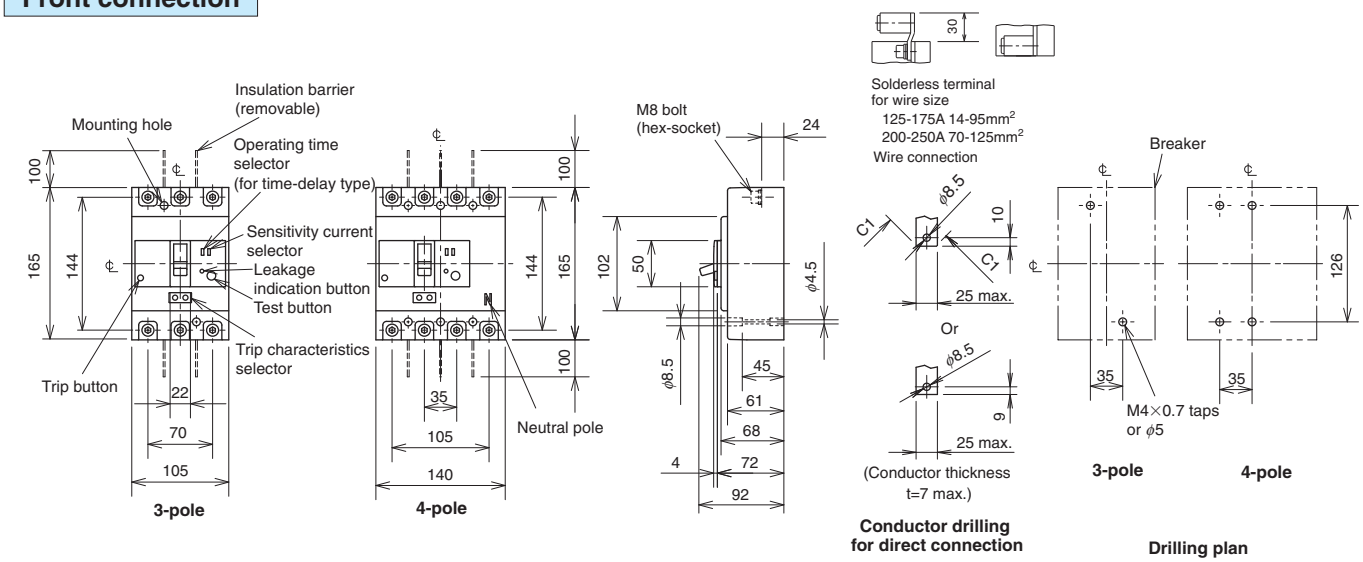


### Rear connection

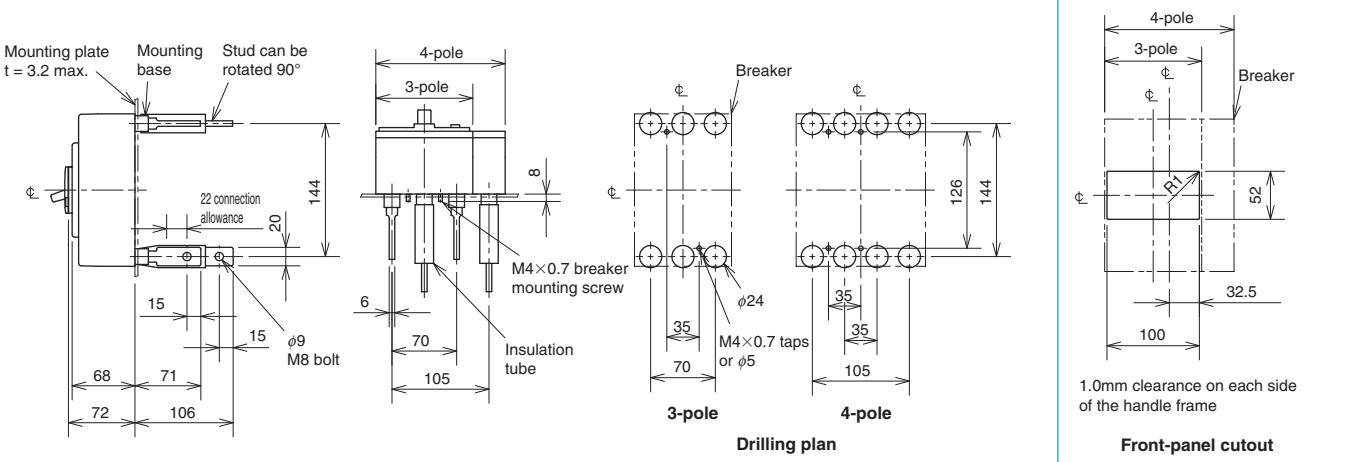


### Plug-in

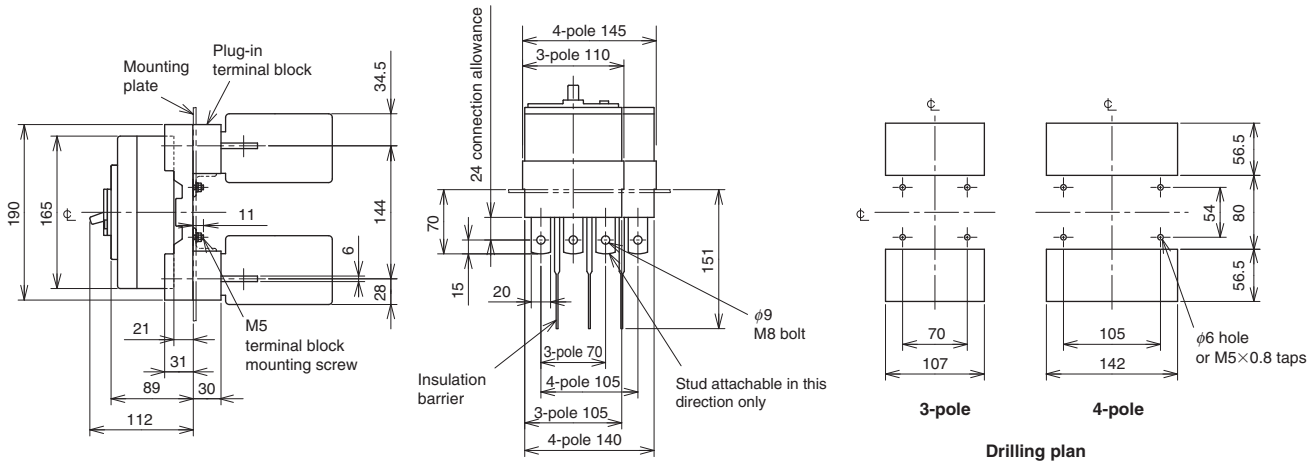


Remark: 1. Only 3-pole models are available for the model of NV250-SEV and NV250-HEV.

# NV400-CW
# NV400-SW

NV400-SW

| Model | | | NV400-CW | NV400-SW |
|---|---|---|---|---|
| Number of poles | | | 3 | |
| Rated operational voltage Ue (V AC) (*1) | | | 100-440 Multi-voltage type | |
| Rated current In (A) | | | 250 300 350 400 | |
| High-speed type | Rated current sensitivity IΔn (mA) | | (30) 100 · 200 · 500 Selectable | |
| | Max. operating time at 5IΔn (s) | | 0.04 | |
| Time-delay type | Rated current sensitivity IΔn (mA) | | (100 · 200 · 500 Selectable) | |
| | Max. operating time at 2IΔn (s) | | (0.45 · 1.0 · 2.0 Selectable) | |
| | Inertial non-operating time at 2IΔn (s) | | (0.1 · 0.5 · 1.0) | |
| Earth-leakage indication system | | | Button | |
| Rated short-circuit breaking capacity (kA) IEC 60947-2 (Icu/Ics) EN 60947-2 | AC | 440V | 25/13 | 42/42 |
| | | 400V | 36/18 | 45/45 |
| | | 230V | 50/25 | 85/85 |
| Standard attached parts (Front connection) | | | Mounting screw: M6×60 (4pcs) Insulation barrier: (4pcs) | |

Note *1 Rated operational voltage of time-delay type is for 200-440V.

## Operating Characteristics

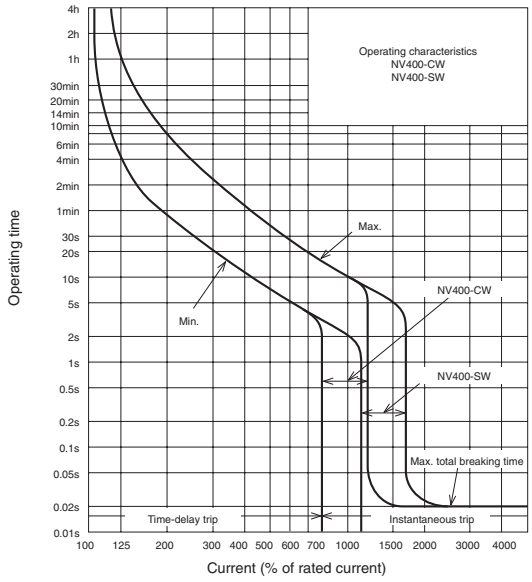


## Earth Leakage Tripping Characteristics

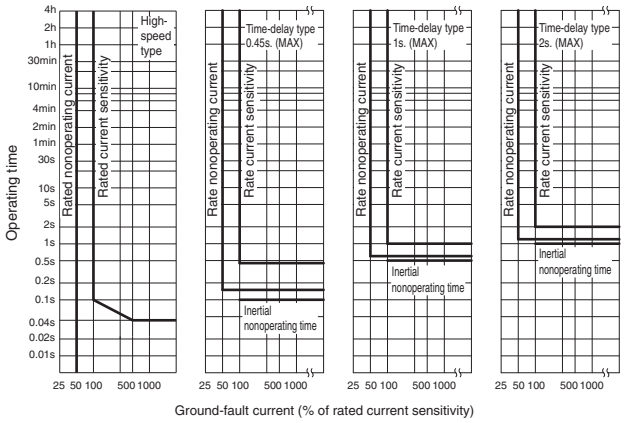


## Internal Accessories

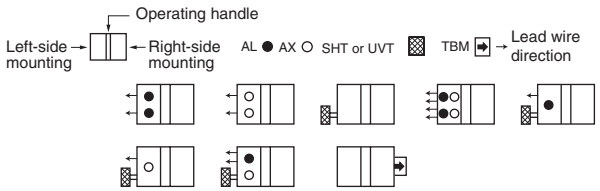


Remark: 1. Refer to page 107.

## Temperature Compensation Curve

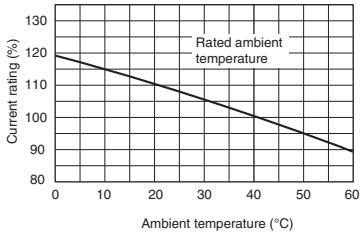


## External Accessories

| Accessories | | Type name | Reference page |
|---|---|---|---|
| Operating handle | F | F-4S | 119 |
| | V | V-4S | 121 |
| Mechanical interlock | MI | MI-4SW3 | 131 |

| Accessories | | | Type name | Reference page |
|---|---|---|---|---|
| Auxiliary handle | | HT | HT-4CW, HT-4SW | 130 |
| Terminal cover | Large | TC-L | TCL-4SW3 | 123 |
| | Skeleton | TTC | TTC-4SW3 | |
| | Rear | BTC | BTC-4SW3 | |
| Handle lock device | | HL | HL-4CW, HL-4SW | 129 |
| | | HL-S | HLS-4SW | |
| Electrical operation device | | | (*1) | 135 |

Note *1 Specify the operation method and voltage. Order in combination with the breaker unit.

## Internal Wiring Diagram

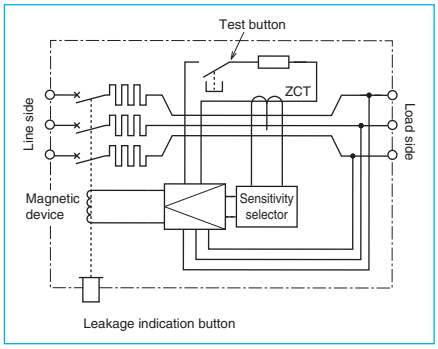

## Outline Drawing

### Front connection

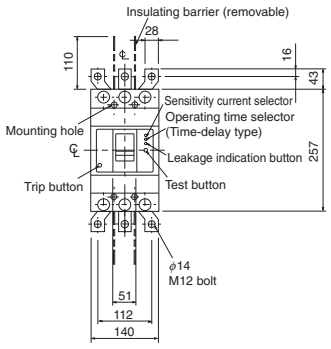


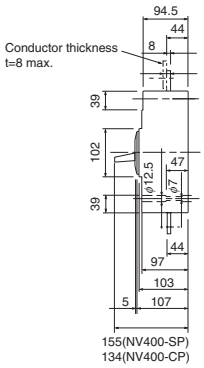


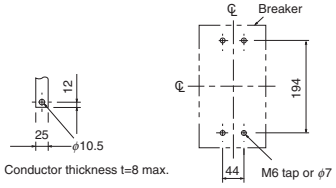


**Conductor drilling for direct connection**

**Drilling plan**

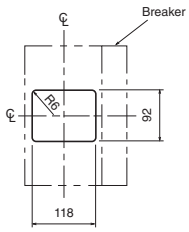


1.0mm clearance on each side of the handle frame.

**Front-panel cutout**

### Rear connection

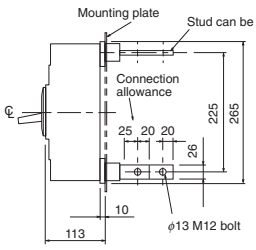


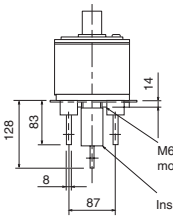


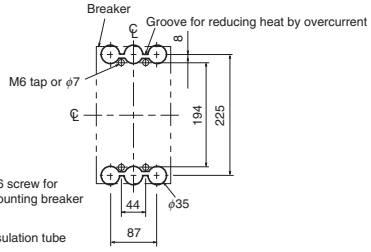


**Drilling plan**

**Boring dimensions for rear connection type barriers (3-pole)**

**Line side**

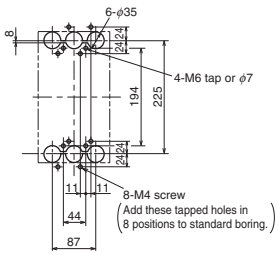


**Load side**

Note The bore dimensional drawing shows the breaker viewed from the rear.

# NV400-SEW
# NV400-HEW
# NV400-REW

NV400-SEW

| Model | | | NV400-SEW | | NV400-HEW | | NV400-REW |
|---|---|---|---|---|---|---|---|
| Number of poles | | | 3 | 4 | 3 | 4 | 3 |
| Rated operational voltage Ue (V AC) (*1) | | | 100-440 Multi-voltage type | | | | |
| Rated current In (A) | | | 200-400 adjustable | | | | |
| High-speed type | Rated current sensitivity IΔn (mA) | | (30) 100 · 200 · 500 Selectable | | | | |
| | Max. operating time at 5IΔn (s) | | 0.04 | | | | |
| Time-delay type | Rated current sensitivity IΔn (mA) | | (100 · 200 · 500 Selectable) | | | | |
| | Max. operating time at 5IΔn (s) | | (0.45 · 1.0 · 2.0 Selectable) | | | | |
| | Max. inertial non-operating time at 2IΔn (s) | | (0.1 · 0.5 · 1.0) | | | | |
| Earth-leakage indication system | | | Button | | | | |
| Rated short-circuit breaking capacity (kA) IEC 60947-2 (Icu/Ics) EN 60947-2 | AC | 440V | 42/42 | | 65/65 | | 125/63 |
| | | 400V | 50/50 | | 70/70 | | 125/63 |
| | | 230V | 85/85 | | 100/100 | | 150/75 |
| Standard attached parts (Front connection) | | | Mounting screw: M6×72 (4pcs) Insulation barrier: (3P: 4pcs, 4P: 6pcs) | | | | |

Note *1 Rated operational voltage of time-delay type is for 200-440V.

## Operating Characteristics

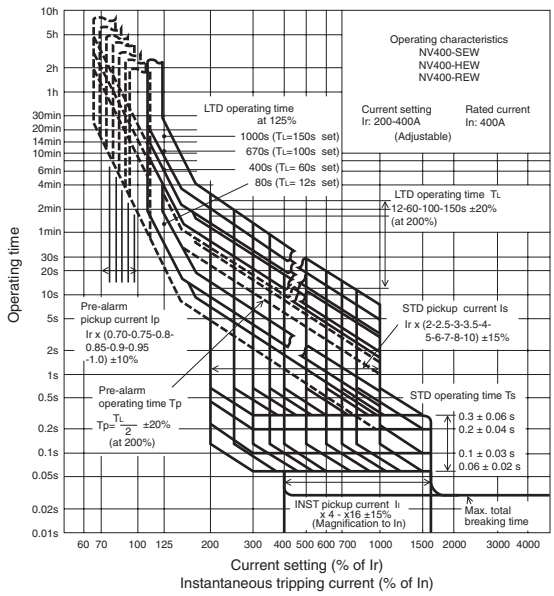


## Earth Leakage Tripping Characteristics

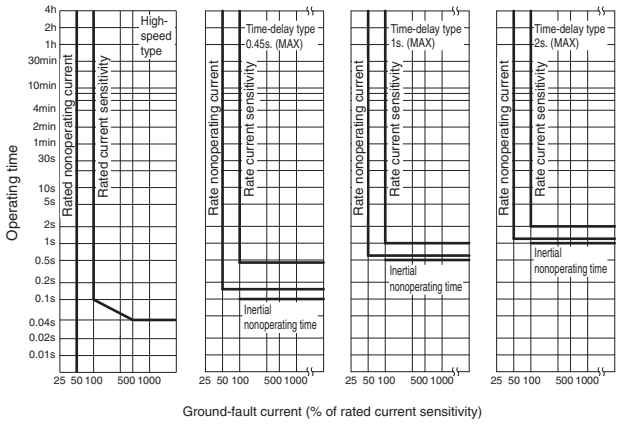


## Internal Accessories

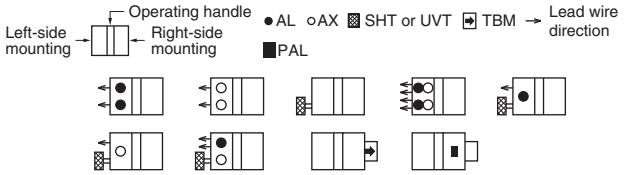


Remarks: 1. Instead of TBM, pre-alarm module (PAL) can be attached.
2. Refer to page 107.

## Current Reducing Curve

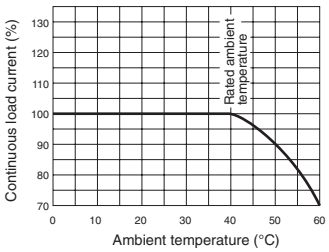


## External Accessories

| Accessories | | | Type name | Reference page |
|---|---|---|---|---|
| Operating handle | F | | F-4S | 119 |
| | V | | V-4S | 121 |
| Mechanical interlock | MI | 3P | MI-4SW3 | 131 |
| | | 4P | MI-4SW4 | |

| Accessories | | | | Type name | Reference page |
|---|---|---|---|---|---|
| Auxiliary handle | | HT | | HT-4SW | 130 |
| Terminal cover | Large | TC-L | 3P | TCL-4SW3 (*1) | 123 |
| | | | 4P | TCL-4SW4 (*1) | |
| | Skeleton | TTC | 3P | TTC-4SW3 | |
| | | | 4P | TTC-4SW4 | |
| | Rear | BTC | 3P | BTC-4SW3 (*2) | |
| | | | 4P | BTC-4SW4 | |
| Handle lock device | | HL | | HL-4SW | 129 |
| | | HL-S | | HLS-4SW | |
| Electrical operation device | | NVM | 3P | (*3) | 135 |
| | | | 4P | | |

Notes *1 This is for NV400-SEW.
*2 This is for NV400-SEW. For rear terminal cover of NV400-HEW/REW, use PTC-4SW3.
*3 Specify the operation method and voltage. Order in combination with the breaker unit.

## Internal Wiring Diagram

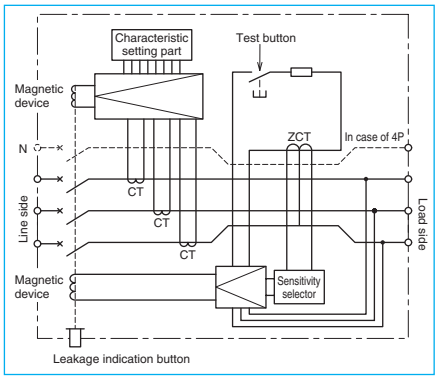

## Outline Drawing

### Front connection

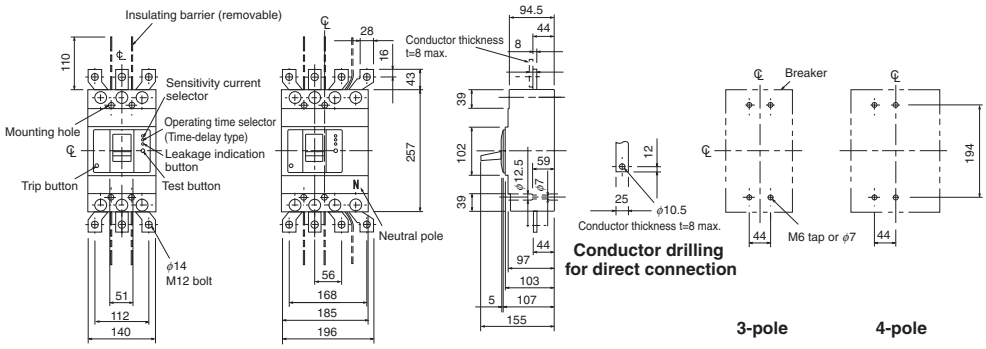


3-pole 4-pole

Drilling plan

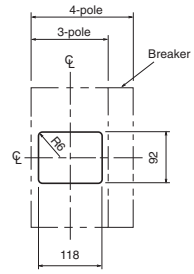


1.0mm clearance on each side of the handle frame.

**Front-panel cutout**

### Rear connection

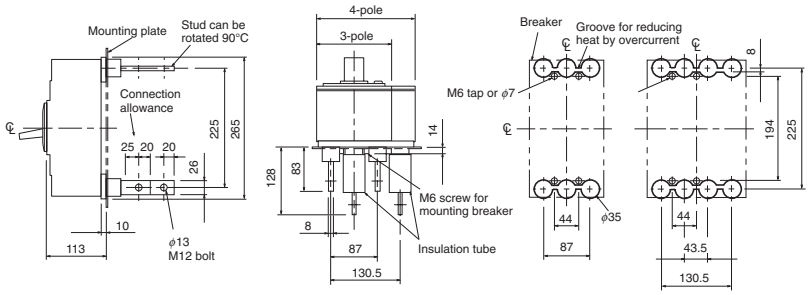


3-pole 4-pole

Drilling plan

**Boring dimensions for rear connection type barriers (3-pole)**

**Line side**

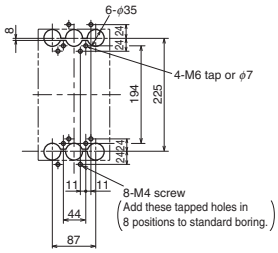


**Load side**

Note The bore dimensional drawing shows the breaker viewed from the rear.

# NV630-CW
# NV630-SW

NV630-SW

| Model | | | NV630-CW | NV630-SW |
|---|---|---|---|---|
| Number of poles | | | 3 | |
| Rated operational voltage Ue (V AC) | | | 100-440 Multi-voltage type | |
| Rated current In (A) | | | 500 600 630 | |
| High-speed type | Rated current sensitivity IΔn (mA) | | – | |
| | Max. operating time at 5IΔn (s) | | – | |
| Time-delay type | Rated current sensitivity IΔn (mA) | | 100 · 200 · 500 Selectable | |
| | Max. operating time at 5IΔn (s) | | 0.45 · 1.0 · 2.0 Selectable | |
| | Max. inertial non-operating time at 2IΔn (s) | | 0.1 · 0.5 · 1.0 | |
| Earth-leakage indication system | | | Button | |
| Rated short-circuit breaking capacity (kA) IEC 60947-2 (Icu/Ics) EN 60947-2 | AC | 440V | 36/18 | 42/42 |
| | | 400V | 36/18 | 50/50 |
| | | 230V | 50/25 | 85/85 |
| Standard attached parts (Front connection) | | | Mounting screw: M6×72 (4pcs) Insulation barrier: (4pcs) | |

## Operating Characteristics

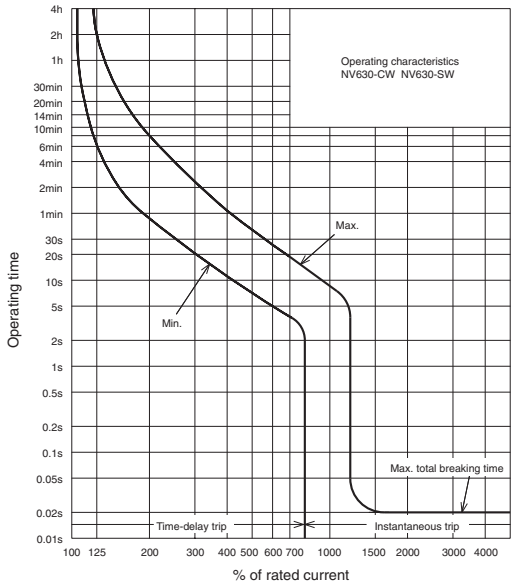


## Earth Leakage Tripping Characteristics

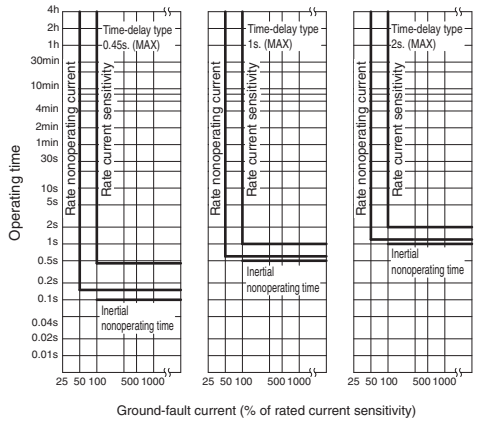


## Internal Accessories

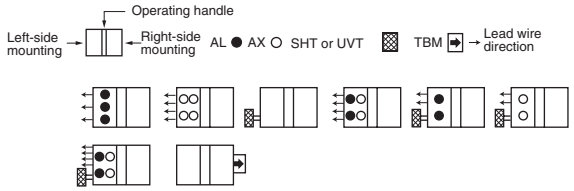


Remark: 1. Refer to page 107.

## Temperature Compensation Curve

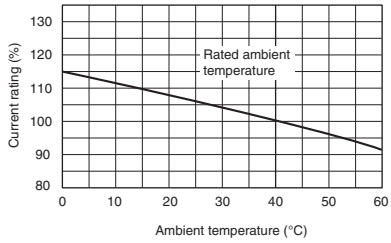


## External Accessories

| Accessories | | Type name | Reference page |
|---|---|---|---|
| Operating handle | F | F-4S | 119 |
| | V | V-4S | 121 |
| Mechanical interlock | MI | MI-4SW3 | 131 |

| Accessories | | | Type name | Reference page |
|---|---|---|---|---|
| Auxiliary handle | | HT | HT-4SW | 130 |
| Terminal cover | Large | TC-L | TCL-4SW3 | 123 |
| | Skeleton | TTC | TTC-4SW3 | |
| | Rear | BTC | BTC-4SW3 | |
| Handle lock device | | HL | HL-4SW | 129 |
| | | HL-S | HLS-4SW | |
| Electrical operation device | | | (*1) | 135 |

Note *1 Specify the operation method and voltage. Order in combination with the breaker unit.

## Internal Wiring Diagram

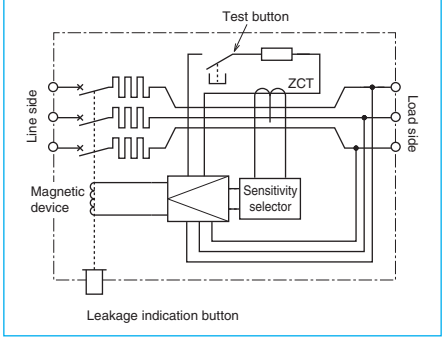

## Outline Drawing

### Front connection

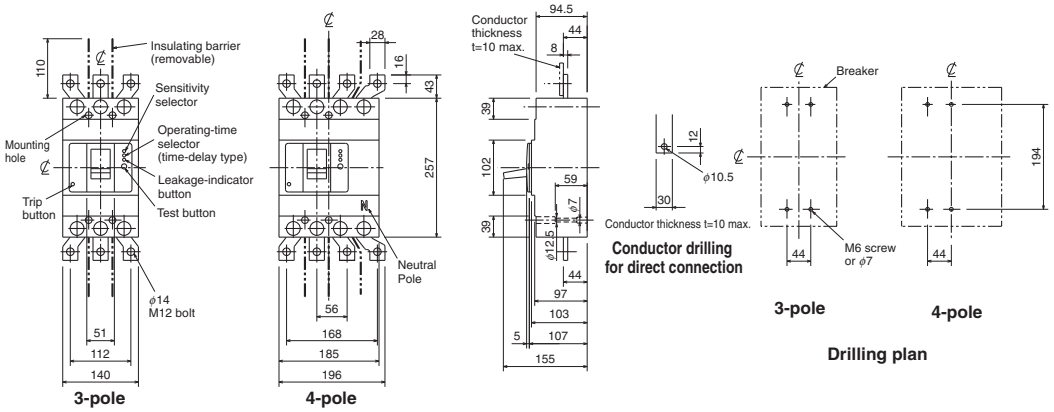


3-pole 4-pole

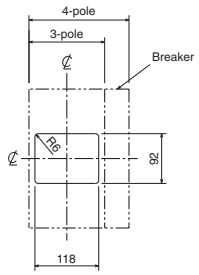


Front-plate cutout

### Rear connection

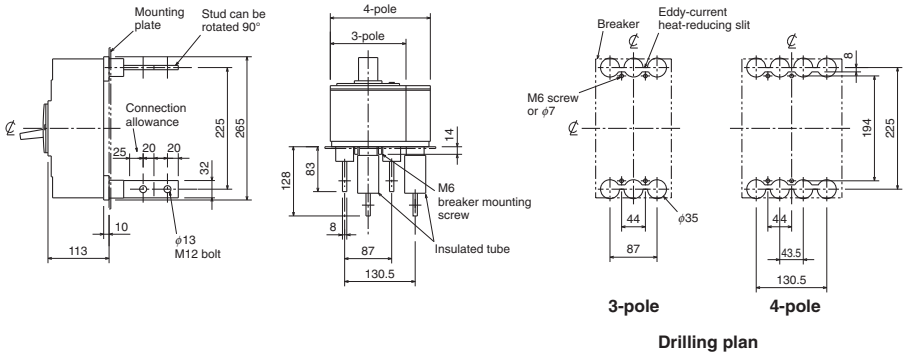


**Boring dimensions for rear connection type barriers (3-pole)**

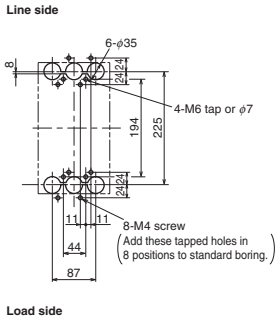


Note The bore dimensional drawing shows the breaker viewed from the rear.

# NV630-SEW
# NV630-HEW

NV630-SEW

| Model | | | NV630-SEW | | NV630-HEW |
|---|---|---|---|---|---|
| Number of poles | | | 3 | 4 | 3 |
| Rated operational voltage Ue (V AC) (*1) | | | 100-440 Multi-voltage type | | |
| Rated current In (A) | | | 300-630 adjustable | | |
| High-speed type | Rated current sensitivity IΔn (mA) | | – | | |
| | Max. operating time at 5IΔn (s) | | – | | |
| Time-delay type | Rated current sensitivity IΔn (mA) | | (100 · 200 · 500 Selectable) | | |
| | Max. operating time at 5IΔn (s) | | (0.45 · 1.0 · 2.0 Selectable) | | |
| | Max. inertial non-operating time at 2IΔn (s) | | (0.1 · 0.5 · 1.0) | | |
| Earth-leakage indication system | | | Button | | |
| Rated short-circuit breaking capacity (kA) IEC 60947-2 (Icu/Ics) EN 60947-2 | AC | 440V | 42/42 | | 65/65 |
| | | 400V | 50/50 | | 70/70 |
| | | 230V | 85/85 | | 100/100 |
| Standard attached parts (Front connection) | | | Mounting screw: M6×72 (4pcs) Insulation barrier: (3P: 4pcs, 4P: 6pcs) | | |

Note *1 Rated operational voltage of time-delay type is for 200-440V.

## Operating Characteristics

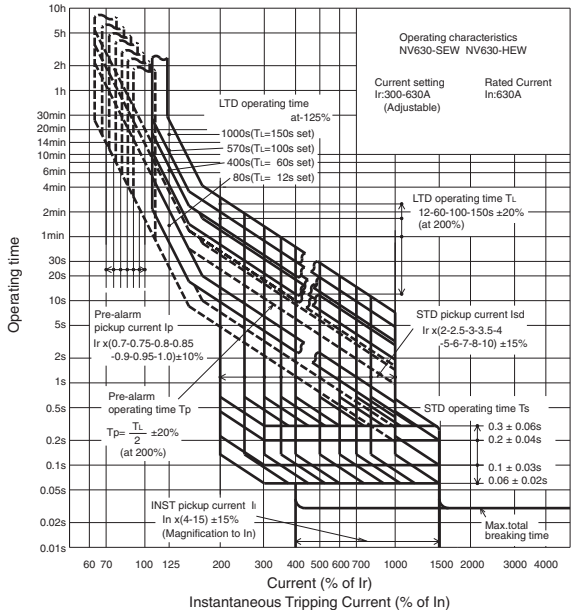


## Earth Leakage Tripping Characteristics

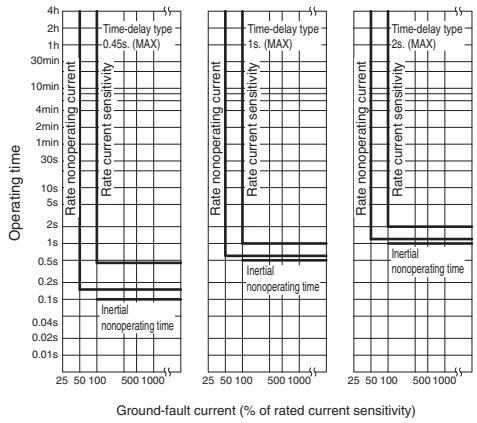


## Internal Accessories

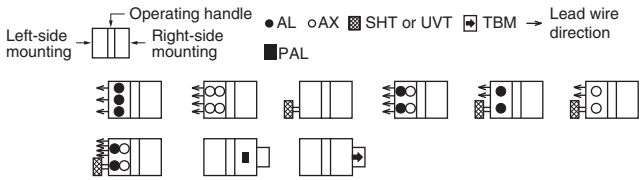


Remarks: 1. Instead of TBM, pre-alarm module (PAL) can be attached.
2. Refer to page 107.

## Current Reducing Curve

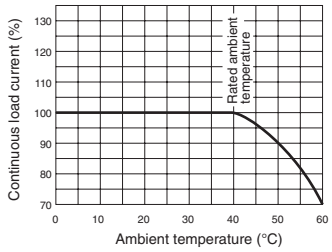


## External Accessories

| Accessories | | | Type name | Reference page |
|---|---|---|---|---|
| Operating handle | F | | F-4S | 119 |
| | V | | V-4S | 121 |
| Mechanical interlock | MI | 3P | MI-4SW3 | 131 |
| | | 4P | MI-4SW4 | |

Notes *1 This is for NV630-SEW.
*2 This is for NV630-SEW. For rear terminal cover of NV630-HEW, use PTC-4SW3.
*3 Specify the operation method and voltage. Order in combination with the breaker unit.

| Accessories | | | | Type name | Reference page |
|---|---|---|---|---|---|
| Auxiliary handle | | HT | | HT-4SW | 130 |
| Terminal cover | Large | TC-L | 3P | TCL-4SW3 (*1) | 123 |
| | | | 4P | TCL-4SW4 (*1) | |
| | Skeleton | TTC | 3P | TTC-4SW3 | |
| | | | 4P | TTC-4SW4 | |
| | Rear | BTC | 3P | BTC-4SW3 (*2) | |
| | | | 4P | BTC-4SW4 | |
| Handle lock device | | HL | | HL-4SW | 129 |
| | | HL-S | | HLS-4SW | |
| Electrical operation device | | NVM | 3P | (*3) | 135 |
| | | | 4P | | |

## Internal Wiring Diagram

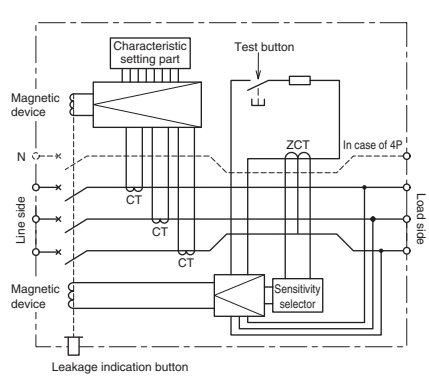

## Outline Drawing

### Front connection

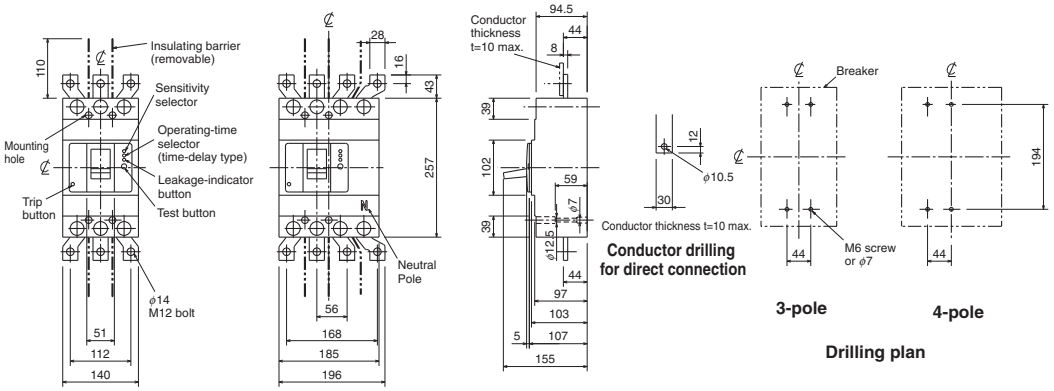


3-pole 4-pole

Conductor drilling for direct connection

3-pole 4-pole

Drilling plan

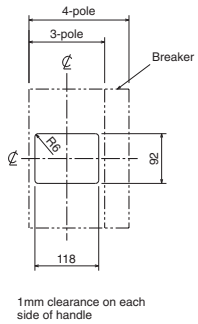


Front-plate cutout

### Rear connection

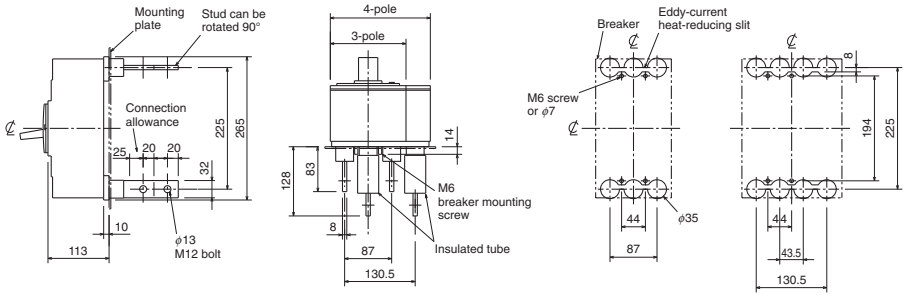


3-pole 4-pole

Drilling plan

**Boring dimensions for rear connection type barriers (3-pole)**

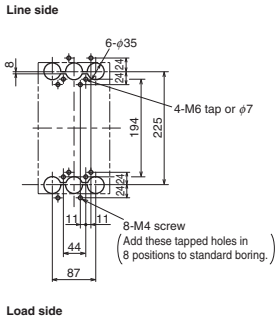


Note The bore dimensional drawing shows the breaker viewed from the rear.

# NV800-SEW
# NV800-HEW

NV800-SEW

| Model | | | NV800-SEW | NV800-HEW |
|---|---|---|---|---|
| Number of poles | | | 3 | |
| Rated operational voltage Ue (V AC) | | | 100-440 Multi-voltage type | |
| Rated current In (A) | | | 400-800 adjustable | |
| High-speed type | Rated current sensitivity IΔn (mA) | | – | |
| | Max. operating time at 5IΔn (s) | | – | |
| Time-delay type | Rated current sensitivity IΔn (mA) | | 100 · 200 · 500 Selectable | |
| | Max. operating time at 5IΔn (s) | | 0.45 · 1.0 · 2.0 Selectable | |
| | Max. inertial non-operating time at 2IΔn (s) | | 0.1 · 0.5 · 1.0 | |
| Earth-leakage indication system | | | Button | |
| Rated short-circuit breaking capacity (kA) IEC 60947-2 (Icu/Ics) EN 60947-2 | AC | 440V | 42/42 | 65/65 |
| | | 400V | 50/50 | 70/70 |
| | | 230V | 85/85 | 100/100 |
| Standard attached parts (Front connection) | | | Mounting screw: M6×35 (4pcs) Insulation barrier: (2pcs) | |

## Operating Characteristics

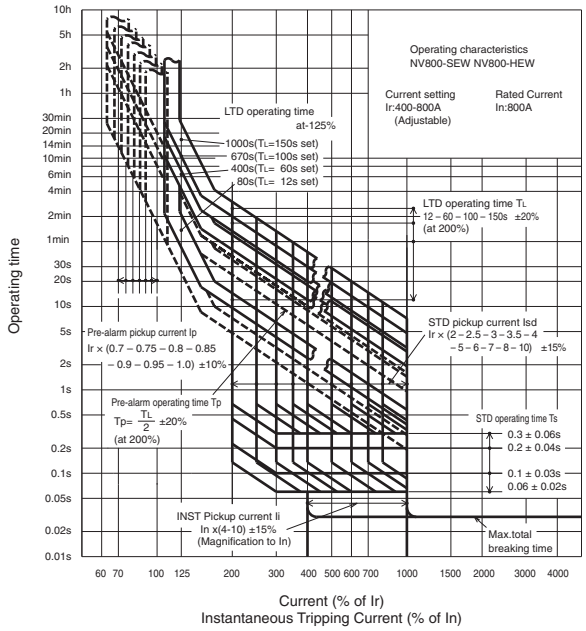


## Earth Leakage Tripping Characteristics

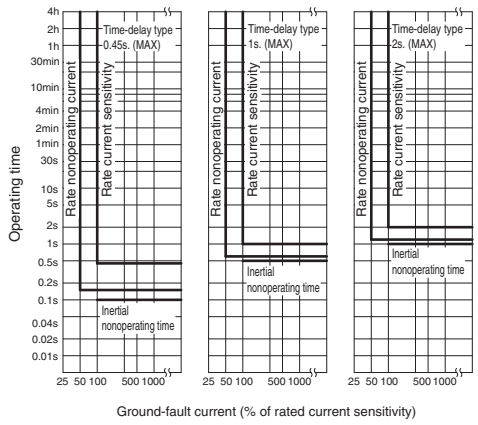


## Internal Accessories

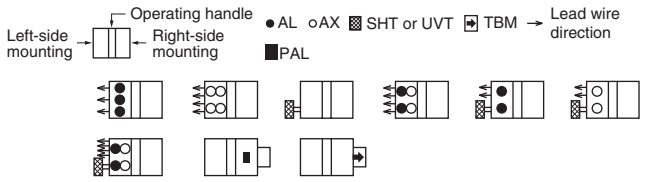


Remarks: 1. Instead of TBM, pre-alarm module (PAL) or trip indicator (TI) can be attached.
2. Refer to page 107.

## Current Reducing Curve

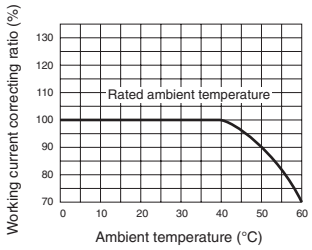


## External Accessories

| Accessories | | Type name | Reference page |
|---|---|---|---|
| Operating handle | F | F-8S | 119 |
| | V | V-8S | 121 |
| Mechanical interlock | MI | MI-8SW3 | 131 |

| Accessories | | | Type name | Reference page |
|---|---|---|---|---|
| Auxiliary handle | | HT | HT-4SW | 130 |
| Terminal cover | Large | TC-L | TCL-8SW3 | 123 |
| | Skeleton | TTC | TTC-8SW3 | |
| | Rear | BTC | BTC-8SW3 | |
| Handle lock device | | HL | HL-4SW | 129 |
| | | HL-S | HLS-8SW | |
| Electrical operation device | | | (*1) | 135 |

Note *1 Specify the operation method and voltage. Order in combination with the breaker unit.

## Internal Wiring Diagram

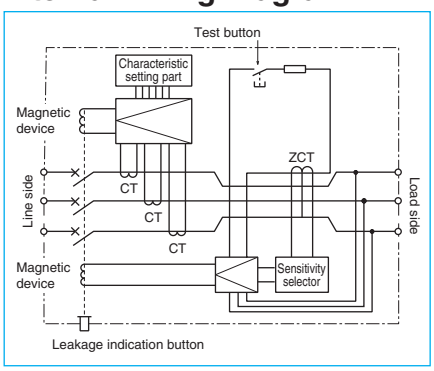

## Outline Drawing

### Front connection

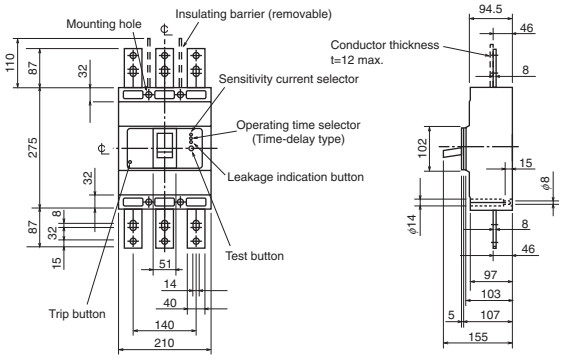


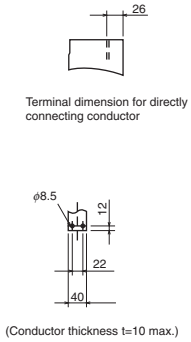


**Conductor drilling for direct connection**

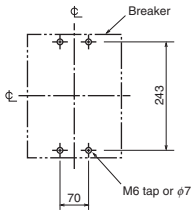


**Drilling plan**

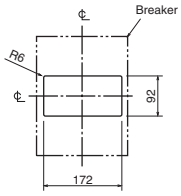


1.0mm clearance on each side of the handle frame.

**Front-panel cutout**

### Rear connection

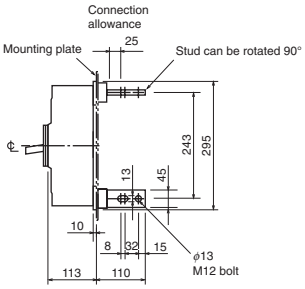


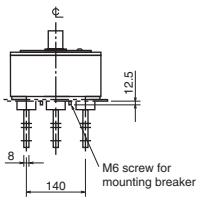


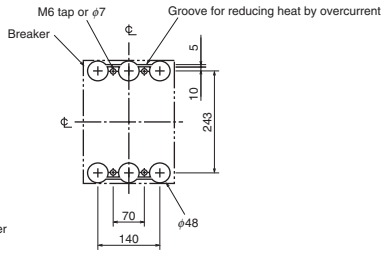


**Drilling plan**

**Boring dimensions for rear connection type barriers (3-pole)**

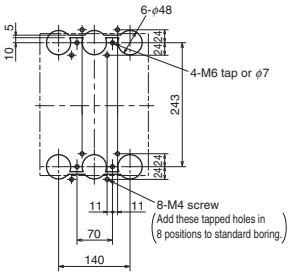


Note The bore dimensional drawing shows the breaker viewed from the rear.

# NF50-SVFU
# NV50-SVFU

NF50-SVFU

| Model | | | | NF50-SVFU | | Model | | | | NV50-SVFU | |
|---|---|---|---|---|---|---|---|---|---|---|---|
| Rated current In (A) Rated ambient temperature 40°C | | | | (3) 5 10 15 20 30 40 50 | | Rated current In (A) Rated ambient temperature 40°C | | | | (5) (10) 15 20 30 40 50 | |
| | | | | | | Number of poles | | | | 2 | 3 |
| Number of poles | | | | 2 | 3 | Phase line | | | | 1φ2W | 3φ3W 1φ2W |
| Rated short-circuit breaking capacity (kA) | UL 489 CSA C22.2 No.5-02 | Rated voltage VAC | | 240 | | Rated voltage VAC | UL 489 | | | 120-240 | |
| | | AC | 600Y/347V | – | | | IEC 60947-2 EN 60947-2 | | | 100-240 | 100-440 |
| | | | 480V | – | | | | | | | |
| | | | 480Y/277V | – | | High-speed type | Rated current sensitivity IΔn mA | | | 30 50 | 30 50 100 |
| | | | 240V | 14 | | | Pick-up current UL 1053 | | | 75% of IΔn | |
| | | | 120V | – | | | Operating time (sec) within AT 5IΔn | | | 0.04 (*1) | |
| | IEC 60947-2 EN 60947-2 (Icu/Ics) | Rated insulation voltage Ui V | | 440 | | Earth-leakage indication system | | | | Indicator window | |
| | | AC | 690V | – | | Rated short-circuit breaking capacity (kA) | UL 489 CSA C22.2 No.5-02 | AC | 480V | – | |
| | | | 500V | – | | | | | 240V | 14 | |
| | | | 440V | 7.5/4 | | | | | 120V | 14 | |
| | | | 415V | 10/5 | | | IEC 60947-2 EN 60947-2 (Icu/Ics) | AC | 440V | – | 7.5/4 |
| | | | 400V | 10/5 | | | | | 400V | – | 10/5 |
| | | | 380V | 10/5 | | | | | 230V | 15/8 | 15/8 |
| | | | 230V | 15/8 | | | | | 100V | 15/8 | 15/8 |
| Standard attached parts (Front connection) | | | | IEC35 rail mounting claws | | | | | | | |

Note *1 0.1 for UL1053.
Remark: 1. The mounting screws must be prepared by the user. (Recommended size: M4×0.7×65 (2 pcs).)

## Operating Characteristics

(The CE and CCC characteristics are noted differently. Contact us for more information.)

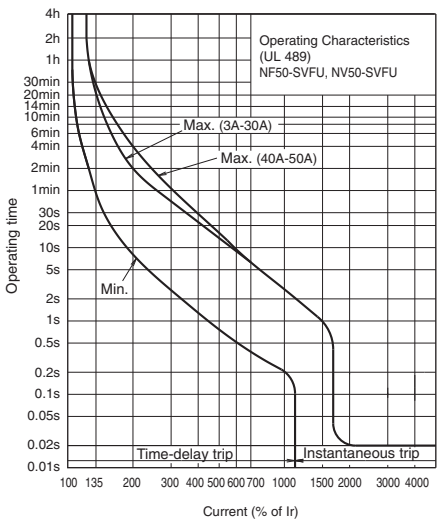


## Earth Leakage Tripping Characteristics

(The CE and CCC characteristics are noted differently. Contact us for more information.)

**NV50-SVFU**
**(UL 1053)**

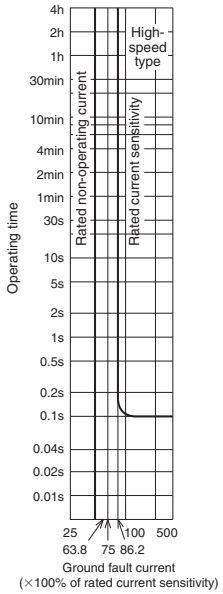


## Internal Accessories

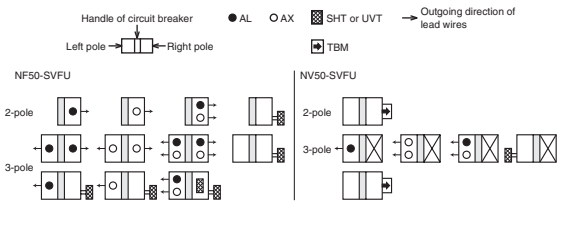


## Temperature Compensation Curve

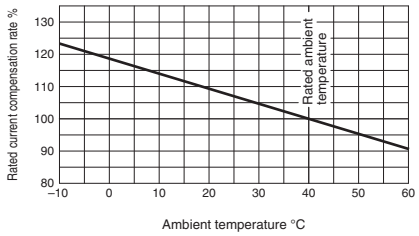


## Internal Wiring Diagram

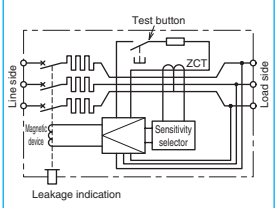


## External Accessories

| Accessories | | | Type name | Reference page |
|---|---|---|---|---|
| Operating handle | F | 2P | F-03SVUL2 | 119 |
| | | 3P | F-03SVUL | |
| | V | 2P | V-03SVUL2 | 121 |
| | | 3P | V-03SVUL | |
| Handle lock device | HL | | HLF-03SVU | 129 |
| | HL-S | | HLS-03SVU | |

| Accessories | | | | Type name | Reference page |
|---|---|---|---|---|---|
| Terminal cover | Large | TC-L | 2P | TCL-03SVU2 | 123 |
| | | | 3P | TCL-03SVU3 | |

## Outline Drawing

### Front connection

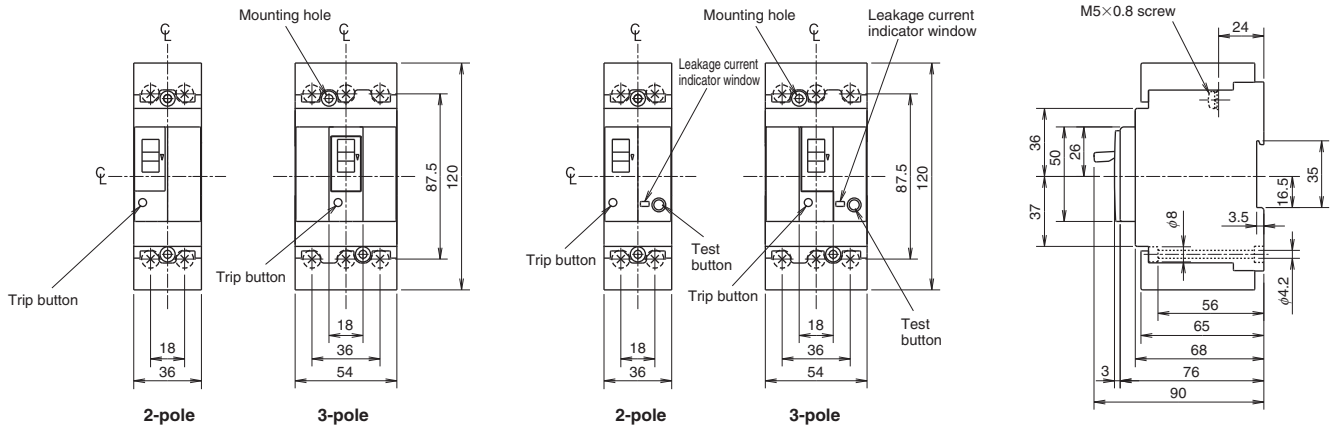


(NF50-SVFU) (NV50-SVFU)

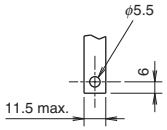


(Conductor thickness t=4 max.)

**Conductor drilling for direct connection**

Remarks: 1. The mounting screws are not enclosed with the breaker.
2. The wires cannot be connected directly.

**Compatible crimp terminals** Tightening torque 22lb-in (2.5N·m)

| Applicable wire range (*1) | | Crimp terminal type (*2) | |
|---|---|---|---|
| mm² | AWG (#) (60°C/75°C) | JST | NTM |
| 1.04-2.63 | 16-14 | R2-5<br>2-M5<br>V2-5<br>V2-M5 | R2-5<br>R2-5M |
| 2.63-4.6 | 12 | - | R3.5-5S<br>R3.5-5L |
| 2.63-6.64 | 12-10 | R5.5-5<br>V5.5-5 | R5.5-5<br>R5.5-5S<br>R5.5-5N |
| 6.64-10.52 | 8 | R8-5 | R8-5<br>R8-5S |
| 10.52-16.78 | 6 | R14-5<br>14-NK5 | R14-5<br>R14-5S |
| 16.78-26.66 | 4 | 22-S5<br>22-S6 | R22-5S |

JST: Japan Solderless Terminal Mfg. Co.
NTM: Nichifu Co., Ltd.
Notes *1 14AWG or lager to comply with UL Standards.
*2 When using with a wire connection, use the crimp terminal combination shown above.

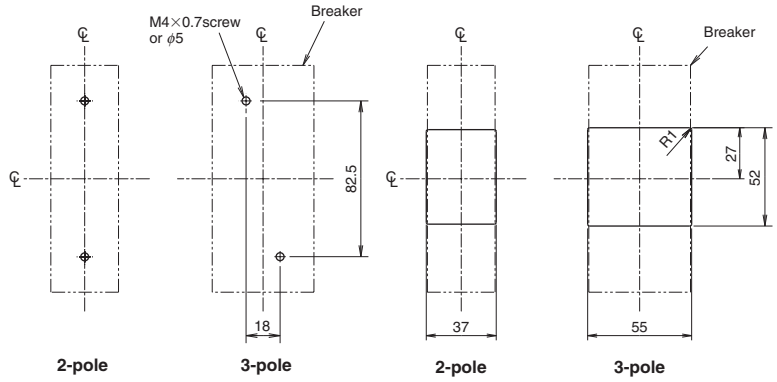


The drilling dimensions have a 1.0 mm clearance on each side of breaker window frame.

**Drilling plan** **Front panel drilling plan**

# NF100-CVFU
# NV100-CVFU

NF100-CVFU

| Model | | | | NF100-CVFU | | Model | | | | NV100-CVFU |
|---|---|---|---|---|---|---|---|---|---|---|
| Rated current In (A) Rated ambient temperature 40°C | | | | 60 (70) 75 (80) (90) 100 | | Rated current In (A) Rated ambient temperature 40°C | | | | 60 (70) 75 (80) (90) 100 |
| | | | | | | Number of poles | | | | 3 |
| | | | | | | Phase line | | | | 3φ3W 1φ2W |
| Number of poles | | | | 2 | 3 | Rated voltage VAC | | UL 489 | | 120-240 |
| Rated short-circuit breaking capacity (kA) | UL 489 CSA C22.2 No.5-02 | Rated voltage VAC | | 240 | | | | IEC 60947-2 EN 60947-2 | | 100-440 |
| | | AC | 600Y/347V | – | | High-speed type | Rated current sensitivity IΔn mA | | | 30/50/ 100/200/500 selectable |
| | | | 480V | – | | | Pick-up current UL 1053 | | | 75% of IΔn |
| | | | 480Y/277V | – | | | Operating time (sec) within AT 5IΔn | | | 0.04 (*1) |
| | | | 240V | 14 | | | | | | |
| | | | 120V | – | | | | | | |
| | IEC 60947-2 EN 60947-2 (Icu/Ics) | Rated insulation voltage UI V | | 600 | | Earth-leakage indication system | | | | Mechanical button |
| | | AC | 690V | – | | Rated short-circuit breaking capacity (kA) | UL 489 CSA C22.2 No.5-02 | AC | 480V | – |
| | | | 500V | 7.5/4 | | | | | 240V | 14 |
| | | | 440V | 10/5 | | | | | 120V | 14 |
| | | | 415V | 10/5 | | | IEC 60947-2 EN 60947-2 (Icu/Ics) | AC | 440V | 10/5 |
| | | | 400V | 10/5 | | | | | 400V | 10/5 |
| | | | 380V | 10/5 | | | | | 230V | 15/8 |
| | | | 230V | 15/8 | | | | | 100V | 15/8 |
| Standard attached parts (Front connection) | | | | IEC35 rail mounting claws, Insulating barrier (2P: 2pcs, 3P: 4pcs) (Only for type with bar terminal) Mounting screw M4×0.7×55 (2 screws) | | | | | | |

Note *1 0.1 for UL1053.

## Operating Characteristics

(The CE and CCC characteristics are noted differently. Contact us for more information.)

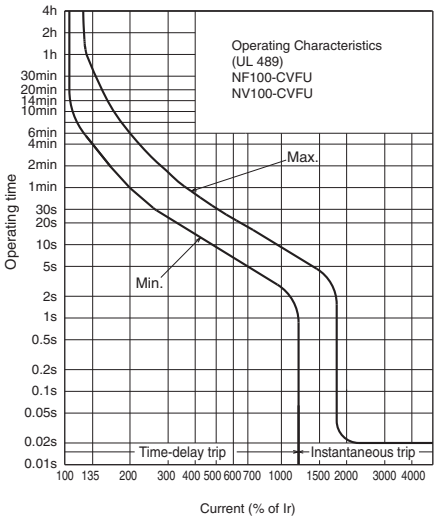


## Earth Leakage Tripping Characteristics

(The CE and CCC characteristics are noted differently. Contact us for more information.)

**NV100-CVFU**
**(UL 1053)**

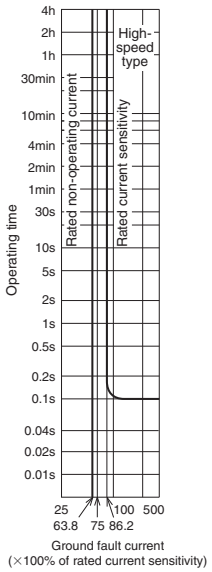


## Internal Accessories

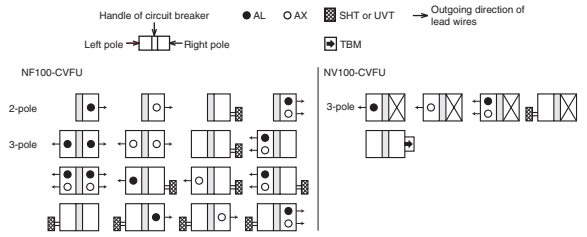


## Temperature Compensation Curve

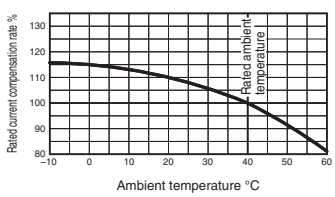


## Internal Wiring Diagram

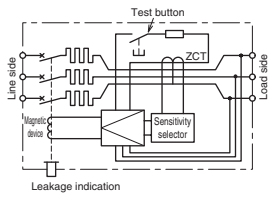


## External Accessories

| Accessories | | | Type name | Reference page | Accessories | | | | Type name | Reference page |
|---|---|---|---|---|---|---|---|---|---|---|
| Operating handle | F | 2P | F-05SVUL2 | 119 | Terminal cover | Large | TC-L | 2P | TCL-05SVU2 | 123 |
| | | 3P | F-05SVUL | | | | | | TCL-05SVU2L | |
| | V | 2P | V-05SVUL2 | 121 | | | | 3P | TCL-05SVU3 | |
| | | 3P | V-05SVUL | | | | | | TCL-05SVU3L | |
| Handle lock device | HL | | HLF-05SVU | 129 | | | | | | |
| | HL-S | 2P | HLS-05SVU2 | | | | | | | |
| | | 3P | HLS-05SVU | | | | | | | |

## Outline Drawing

### Front connection

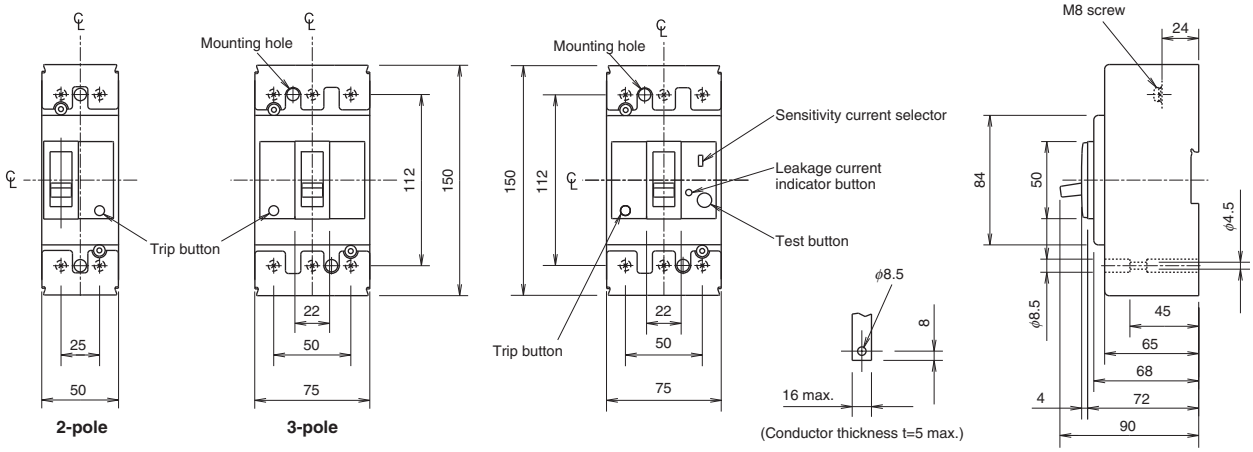


2-pole 3-pole

(NF100-CVFU) (NV100-CVFU)

**Conductor drilling for direct connection**

**Compatible crimp terminals** Tightening torque 54lb-in (6N-m)

| Applicable wire range | | Crimp terminal type (*1) | |
|---|---|---|---|
| mm² | AWG (#) (60°C/75°C) | JST | NTM |
| 2.5-2.63 | 14 | R2-8 | R2-8 |
| 2.63-6.64 | 12-10 | R5.5-8 | R5.5-8 |
| 6.64-10.52 | 8 | R8-8 | R8-8 |
| 10.52-16.78 | 6 | R14-8 | R14-8<br>R14-8S |
| 16.78-26.66 | 4 | R22-8 | R22-8S |
| 26.66-42.42 | 2 | 38-S8 | R38-8S |
| 42.42-60.57 | 1/0 | 60-2BA<br>60-S8 | CB60-8 |

JST: Japan Solderless Terminal Mfg. Co.
NTM: Nichifu Co., Ltd.
Note *1 When using with a wire connection, use the crimp terminal combination shown above.

### Front connection(solderless terminal)

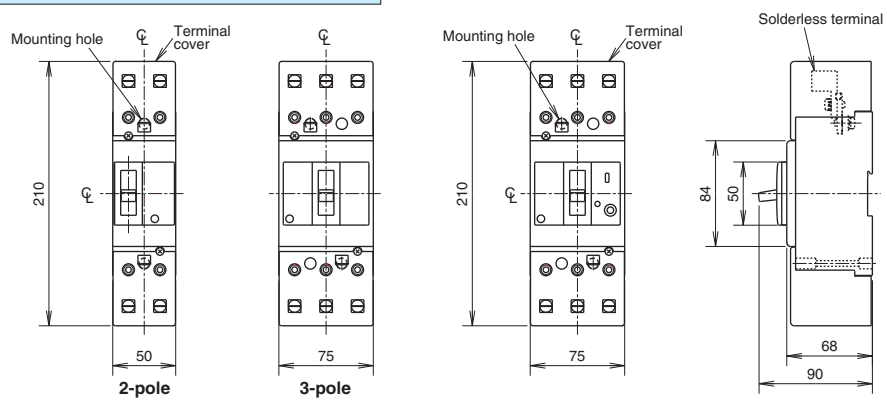


2-pole 3-pole

**Size of screwdriver with bolting**
Please bolt with flat head screwdriver.
The length of X : 6mm-7mm
The length of Y ≦ 9.5mm

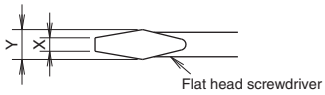


| Wire size 60°C/75°C CU ONLY | Number of strands |
|---|---|
| 14AWG | 7 |
| 12-10AWG | 7 |
| 8AWG | 7 |
| 6-4AWG | 7 |
| 2AWG | 7 |
| 1-1/0AWG | 19 |

The tightening torque is different according to connected wire.
Refer to instruction manual for details.
Remark: Periodical retightening prevents overheating by the setting of twisted strands or the stress of heating and cooling.

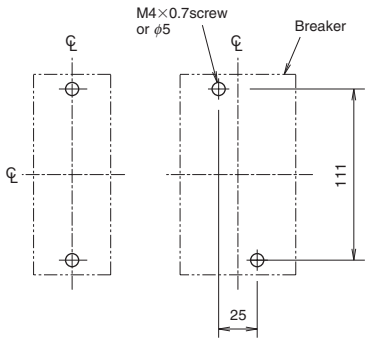


2-pole 3-pole

**Drilling plan**

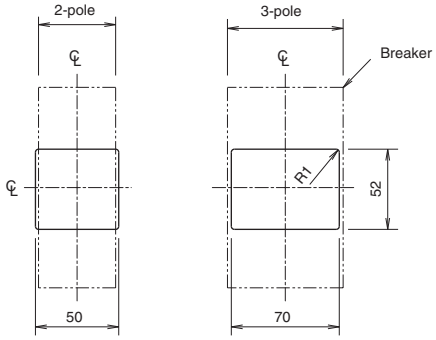


The drilling dimensions have a 1.0 mm clearance on each side of breaker window frame.

**Front panel drilling plan**

# NF125-SVU
# NF125-HVU
# NV125-SVU
# NV125-HVU

NF125-HVU

| Model | | | | NF125-SVU | | NF125-HVU | |
|---|---|---|---|---|---|---|---|
| Rated current In (A) Rated ambient temperature 40°C | | | | 15 20 30 40 50 60 (70) 75 (80) (90) 100 | 125 | 15 20 30 40 50 60 (70) 75 (80) (90) 100 | 125 |
| Number of poles | | | | 2 3 | 2 3 | 3 | 3 |
| Rated short-circuit breaking capacity (kA) | UL 489 CSA C22.2 No.5-02 | Rated voltage VAC | | 480 | 480 | 600Y/347V | 600Y/347V |
| | | AC | 600Y/347V | – | – | 18 | 18 |
| | | | 480V | 30 | 30 | 50 | 50 |
| | | | 240V | 50 | 50 | 100 | 100 |
| | | | 120V | – | – | – | – |
| | IEC 60947-2 EN 60947-2 (Icu/Ics) | Rated insulation voltage Ui V | | 690 | 690 | 690 | 690 |
| | | AC | 690V | 8/4 | 8/4 | 10/5 | 10/5 |
| | | | 500V | 18/9 | 18/9 | 25/13 | 25/13 |
| | | | 440V | 30/15 | 30/15 | 50/25 | 50/25 |
| | | | 415V | 30/15 | 30/15 | 50/25 | 50/25 |
| | | | 400V | 30/15 | 30/15 | 50/25 | 50/25 |
| | | | 380V | 30/15 | 30/15 | 50/25 | 50/25 |
| | | | 230V | 50/25 | 50/25 | 100/50 | 100/50 |
| Standard attached parts (Front connection) | | | | Mounting screw M4×0.7×55 (2 screws), Insulating barrier (2P: 2pcs, 3P: 4pcs) | | | |

| Model | | | | NV125-SVU | | NV125-HVU | |
|---|---|---|---|---|---|---|---|
| Rated current In (A) Rated ambient temperature 40°C | | | | 15 20 30 (40) 50 60 75 100 | 125 | 15 20 30 (40) 50 60 75 100 | 125 |
| Number of poles | | | | 3 | 3 | 3 | 3 |
| Phase line | | | | 3$\phi$3W 1$\phi$2W | 3$\phi$3W 1$\phi$2W | 3$\phi$3W 1$\phi$2W | 3$\phi$3W 1$\phi$2W |
| Rated voltage VAC | UL 489 | | | 120-480 | 120-480 | 120-480 | 120-480 |
| | IEC 60947-2 EN 60947-2 | | | 100-440 | 100-440 | 100-440 | 100-440 |
| High-speed type | Rated current sensitivity I$\Delta$n mA | | | 30/50/ 100/200/500 selectable | 30/50/ 100/200/500 selectable | 30/50/ 100/200/500 selectable | 30/50/ 100/200/500 selectable |
| | Pick-up current UL 1053 | | | 75% of I$\Delta$n | 75% of I$\Delta$n | 75% of I$\Delta$n | 75% of I$\Delta$n |
| | Operating time (sec) within AT 5I$\Delta$n | | | 0.04 (*1) | 0.04 (*1) | 0.04 (*1) | 0.04 (*1) |
| Earth-leakage indication system | | | | Mechanical button | Mechanical button | Mechanical button | Mechanical button |
| Rated short-circuit breaking capacity (kA) | UL 489 CSA C22.2 No.5-02 | AC | 480V | 30 | 30 | 50 | 50 |
| | | | 240V | 50 | 50 | 100 | 100 |
| | | | 120V | 50 | 50 | 100 | 100 |
| | IEC 60947-2 EN 60947-2 (Icu/Ics) | AC | 440V | 30/15 | 30/15 | 50/25 | 50/25 |
| | | | 400V | 30/15 | 30/15 | 50/25 | 50/25 |
| | | | 230V | 50/25 | 50/25 | 100/50 | 100/50 |
| | | | 100V | 50/25 | 50/25 | 100/50 | 100/50 |

Note *1 0.1 for UL1053.

## Operating Characteristics (The CE and CCC characteristics are noted differently. Contact us for more information.)

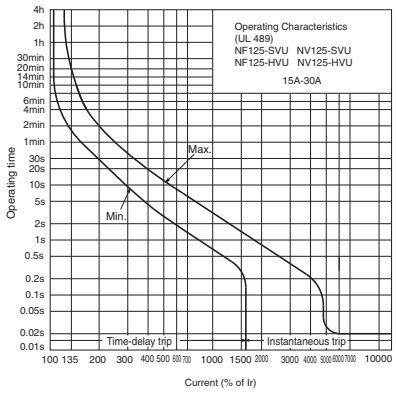


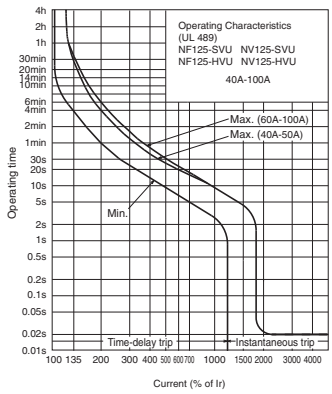


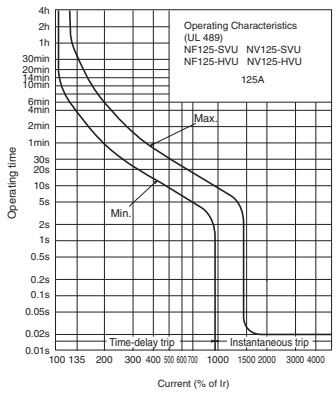


## Earth Leakage Tripping Characteristics
(The CE and CCC characteristics are noted differently. Contact us for more information.)

**NV125-SVU**
**NV125-HVU**
**(UL 1053)**

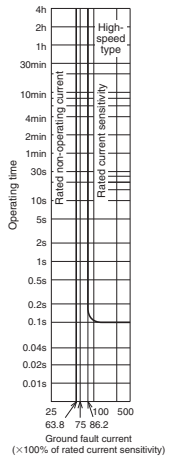


## Internal Accessories

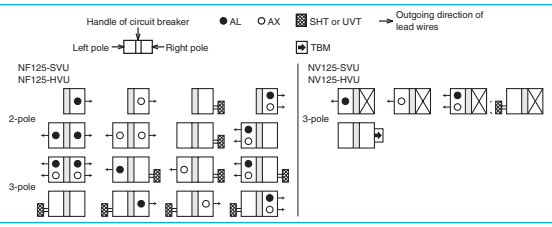


## Temperature Compensation Curve

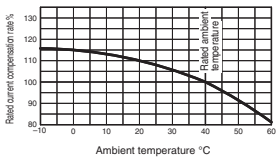


## Internal Wiring Diagram

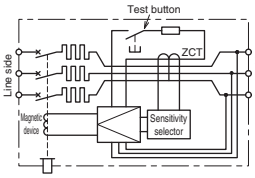


## External Accessories

| Accessories | | Type name | Reference page |
|---|---|---|---|
| Operating handle | F | F-1SVUL | 119 |
| | V | V-1SVUL | 121 |
| Handle lock device | HL | HLF-05SVU | 129 |
| | HL-S | HLS-05SVU | |

| Accessories | | | Type name | Reference page |
|---|---|---|---|---|
| Terminal cover | Large | TC-L | TCL-1SVU3 | 123 |

## Outline Drawing

### Front connection

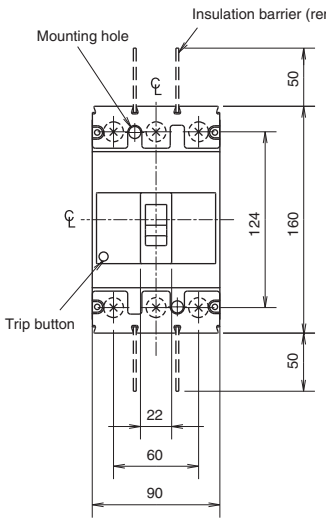


(NF125-SVU, NF125-HVU)

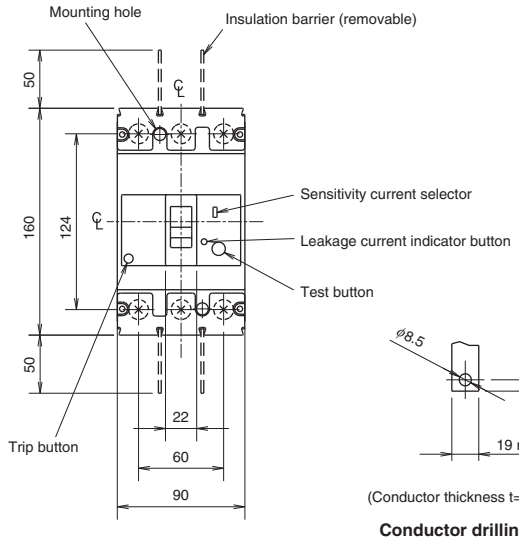


(NV125-SVU, NV125-HVU)

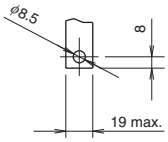


(Conductor thickness t=5 max.)

**Conductor drilling for direct connection**

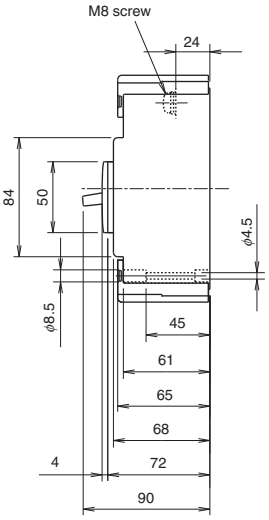


**Compatible crimp terminals** Tightening torque 54lb-in (6N·m)

| Applicable wire range | | Crimp terminal type (*1) | |
|---|---|---|---|
| mm² | AWG (#) (60°C/75°C) | JST | NTM |
| 2.5-2.63 | 14 | R2-8 | R2-8 |
| 2.63-6.64 | 12-10 | R5.5-8 | R5.5-8 |
| 6.64-10.52 | 8 | R8-8 | R8-8 |
| 10.52-16.78 | 6 | R14-8 | R14-8<br>R14-8S |
| 16.78-26.66 | 4 | R22-8 | R22-8S |
| 26.66-42.42 | 2 | 38-S8 | R38-8S |
| 42.42-60.57 | 1/0 | 60-2BA<br>60-S8 | CB60-8 |

JST: Japan Solderless Terminal Mfg. Co.
NTM: Nichifu Co., Ltd.
Note *1 When using with a wire connection, use the crimp terminal combination shown above.

### Front connection (solderless terminal)

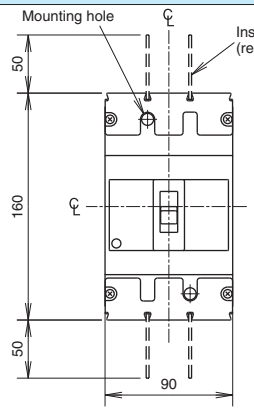


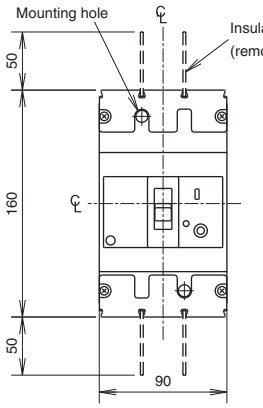


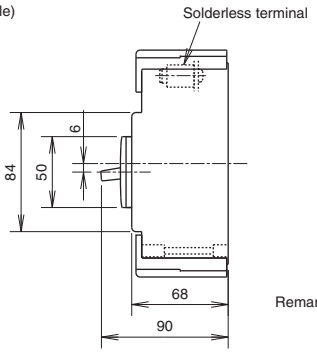


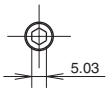


| Wire size 60°C/75°C CU ONLY | Number of strands |
|---|---|
| 14AWG | [a] 7 |
| 12-10AWG | [a] 7 |
| 8AWG | 7 |
| 6AWG | 7 |
| 4-2AWG | 7 |
| 1AWG | 19 |

The tightening torque is different according to connected wire.
Refer to instruction manual for details.
a:Solid copper wire is usable.
Remark: Periodical retightening prevents overheating by the setting of twisted strands or the stress of heating and cooling.

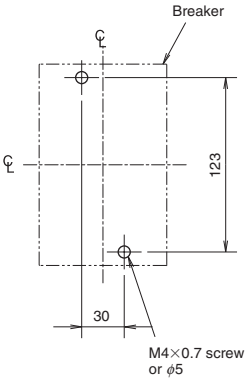


**Drilling plan**

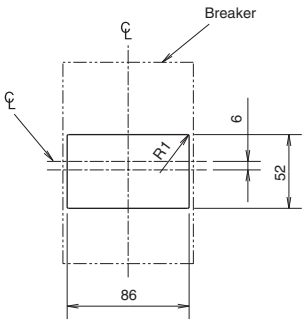


The drilling dimensions have a 1.0 mm clearance on each side of breaker window frame.

**Front panel drilling plan**

Remark: 1. 2-pole models are 3-pole with the central pole conductor removed.

# NF225-CWU

NF225-CWU

| Model | | | | NF225-CWU | |
|---|---|---|---|---|---|
| Rated current In (A) at ambient temperature 40˚C (IEC30˚C) | | | | 125 150 175 200 225 | 250 |
| Number of poles | | | | 3 | |
| Rated short-circuit breaking capacities (kA) | UL 489 | Rated voltage (VAC) | | 240 | |
| | | AC | 240V | 35 | |
| | IEC 60947-2 (Icu/Ics) | Rated insulation voltage Ui (V) | | 600 | |
| | | AC | 500V | 10/5 | – |
| | | | 440V | 15/8 | |
| | | | 400V | 18/9 | |
| | | | 230V | 35/18 | |
| | | DC | 250V | 10/5 (*1) | |
| Standard attached parts | | | | Mounting screw: M4×0.7×55 (2pcs), Insulation barrier: (4pcs), Terminal cover: (1 set) (*2) | |

Notes *1 Use either two poles. When wired as shown at the bottom of page 32, the models can be used for up to 400 V DC.
*2 The standard configuration contains a protection cover and adopts the IP20 (finger protection) structure.

## Operating Characteristics

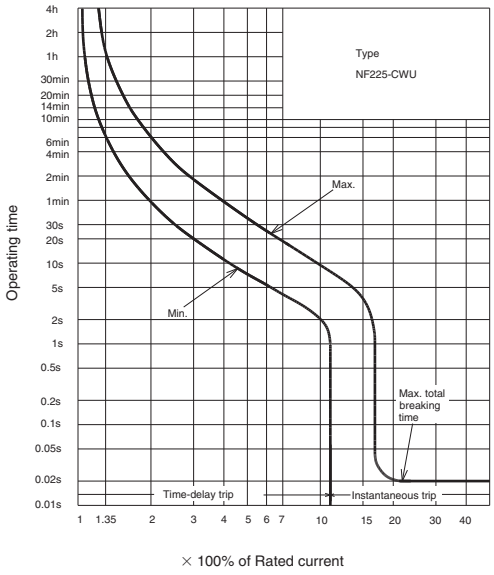


## Internal Accessories

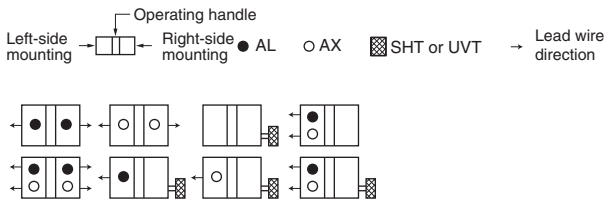


## Temperature Compensation Curve

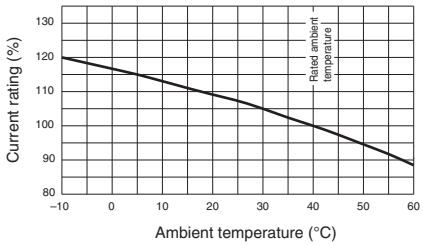


## External Accessories

| Accessories | | Type name | Reference page | Accessories | | | Type name | Reference page |
|---|---|---|---|---|---|---|---|---|
| Operating handle | F | F-2SUL | 119 | Mechanical interlock | | MI | MI-05SWU3 | 131 |
| | V | V-2SUL | 121 | Terminal cover | Large | TC-L | TCL-2SWU3<br>TCL-2SWU3L | 123 |
| Handle lock device | HL | HLF-2SWU | 129 | | | | | |

## Outline Drawing

### Front connection

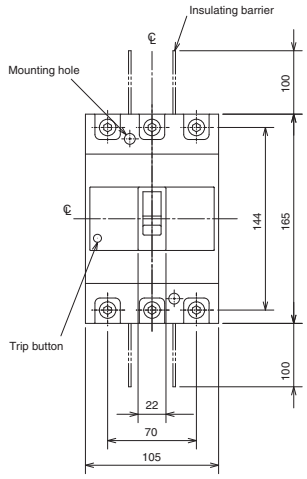


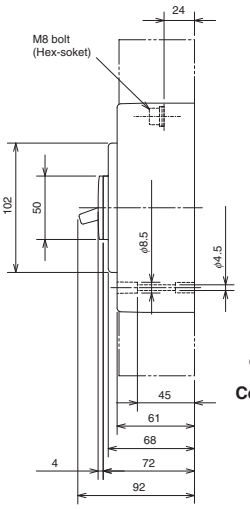


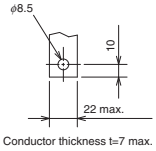


**Conductor drilling for direct connection**

**Compatible crimp terminals** Tightening torque 90lb-in (10N.m)

| Applicable wire range | | Crimp terminal type (*2) | |
|---|---|---|---|
| mm² | AWG (#) (60°C/75°C) | JST | NTM |
| 16.78-26.66 | 4 | R22-8<br>22-S8 | R22-8<br>R22-8S<br>CB22-8S |
| 26.66-42.42 | 2 | R38-8<br>38-S8 | R38-8<br>R38-8S |
| 42.42-60.57 | 1/0 | R60-8<br>60-2BA<br>CB60-S8 | R60-8<br>CB60-8<br>CB60-8S |
| 60.57-76.28 | 2/0 | 70-8 | R70-8 |
| 76.28-96.3 | 3/0 | 80-3BA<br>CB80-S8 | |
| 96.3-117.2 | 4/0 | 100-3BA<br>CB100-S8 | |
| 117.2-152.05 | 250/300MCM | CB150-S8 (*1) | |

JST: Japan Solderless Terminal Mfg. Co.
NTM: Nichifu Co., Ltd.
Notes *1 TCL-2SVU3L can be mounted when using CB150-S8.
*2 When using with a wire connection, use the crimp terminal combination shown above.

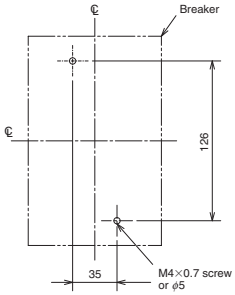


**Drilling plan**

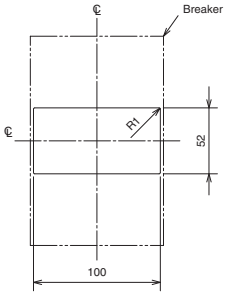


**Front cover cutout**

1mm clearance on each side of handle

# NF250-SVU
# NF250-HVU
# NV250-SVU
# NV250-HVU

NF250-HVU

| Model | | | | NF250-SVU | | NF250-HVU | |
|---|---|---|---|---|---|---|---|
| Rated current In (A) Rated ambient temperature 40°C | | | | 125 150 175 200 225 | 250 | 125 150 175 200 225 | 250 |
| Number of poles | | | | 3 | 3 | 3 | 3 |
| Rated short-circuit breaking capacity (kA) | UL 489 CSA C22.2 No.5-02 | Rated voltage VAC | | 480 | 480 | 600Y/347V | 600Y/347V |
| | | AC | 600Y/347V | – | – | 18 | 18 |
| | | | 480V | 35 | 35 | 50 | 50 |
| | | | 240V | 65 | 65 | 100 | 100 |
| | | | 120V | – | – | – | – |
| | IEC 60947-2 EN 60947-2 (Icu/Ics) | Rated insulation voltage Ui V | | 690 | 690 | 690 | 690 |
| | | AC | 690V | 8/4 | 8/4 | 10/5 | 10/5 |
| | | | 500V | 25/13 | 25/13 | 36/18 | 36/18 |
| | | | 440V | 36/18 | 36/18 | 50/25 | 50/25 |
| | | | 415V | 36/18 | 36/18 | 50/25 | 50/25 |
| | | | 400V | 36/18 | 36/18 | 50/25 | 50/25 |
| | | | 380V | 36/18 | 36/18 | 50/25 | 50/25 |
| | | | 230V | 65/33 | 65/33 | 100/50 | 100/50 |
| Standard attached parts (Front connection) | | | | Mounting screw M4×0.7×55 (2 screws), Insulating barrier (4pcs) | | | |

| Model | | | | NV250-SVU | | NV250-HVU | |
|---|---|---|---|---|---|---|---|
| Rated current In (A) Rated ambient temperature 40°C | | | | 125 150 175 200 225 | 250 | 125 150 175 200 225 | 250 |
| Number of poles | | | | 3 | 3 | 3 | 3 |
| Phase line | | | | 3ø3W 1ø2W | 3ø3W 1ø2W | 3ø3W 1ø2W | 3ø3W 1ø2W |
| Rated voltage VAC | UL 489 | | | 120-480 | 120-480 | 120-480 | 120-480 |
| | IEC 60947-2 EN 60947-2 | | | 100-440 | 100-440 | 100-440 | 100-440 |
| High-speed type | Rated current sensitivity IΔn mA | | | 30/50/ 100/200/500 selectable | 30/50/ 100/200/500 selectable | 30/50/ 100/200/500 selectable | 30/50/ 100/200/500 selectable |
| | Pick-up current UL 1053 | | | 75% of IΔn | 75% of IΔn | 75% of IΔn | 75% of IΔn |
| | Operating time s within AT 5IΔn | | | 0.04 (*1) | 0.04 (*1) | 0.04 (*1) | 0.04 (*1) |
| Earth-leakage indication system | | | | Mechanical button | Mechanical button | Mechanical button | Mechanical button |
| Rated short-circuit breaking capacity (kA) | UL 489 CSA C22.2 No.5-02 | AC | 480V | 35 | 35 | 50 | 50 |
| | | | 240V | 65 | 65 | 100 | 100 |
| | | | 120V | 65 | 65 | 100 | 100 |
| | IEC 60947-2 EN 60947-2 (Icu/Ics) | AC | 440V | 36/18 | 36/18 | 50/25 | 50/25 |
| | | | 400V | 36/18 | 36/18 | 50/25 | 50/25 |
| | | | 230V | 65/33 | 65/33 | 100/50 | 100/50 |
| | | | 100V | 65/33 | 65/33 | 100/50 | 100/50 |

Note *1 0.1 for UL1053.

## Operating Characteristics (The CE and CCC characteristics are noted differently. Contact us for more information.)

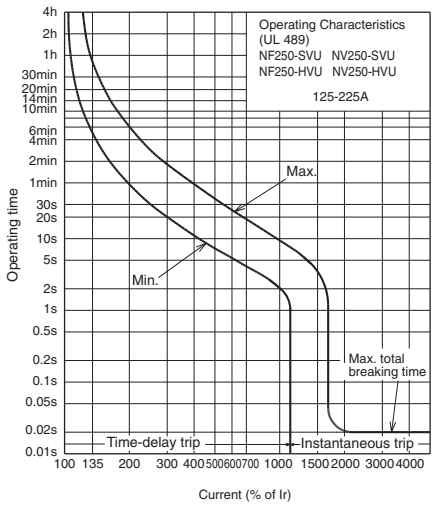


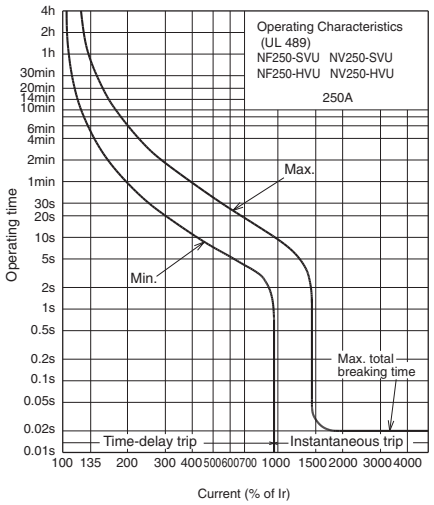


## Earth Leakage Tripping Characteristics

(The CE and CCC characteristics are noted differently. Contact us for more information.)

**NV250-SVU**
**NV250-HVU**
**(UL 1053)**

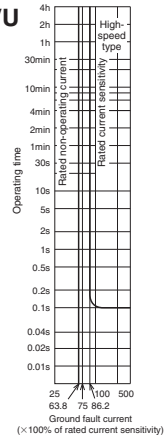


## Internal Accessories

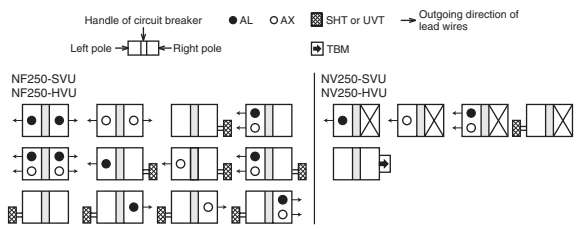


## Temperature Compensation Curve

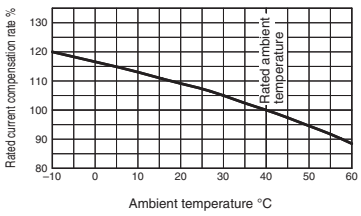


## Internal Wiring Diagram

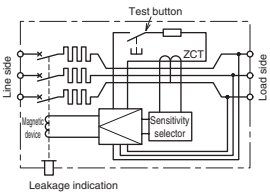


## External Accessories

| Accessories | | Type name | Reference page |
|---|---|---|---|
| Operating handle | F | F-2SVUL | 119 |
| | V | V-2SVUL | 121 |
| Handle lock device | HL | HLF-05SVU | 129 |
| | HL-S | HLS-2SVU | |

| Accessories | | | Type name | Reference page |
|---|---|---|---|---|
| Terminal cover | Large | TC-L | TCL-2SVU3 | 123 |
| | | | TCL-2SVU3L | |

## Outline Drawing

### Front connection

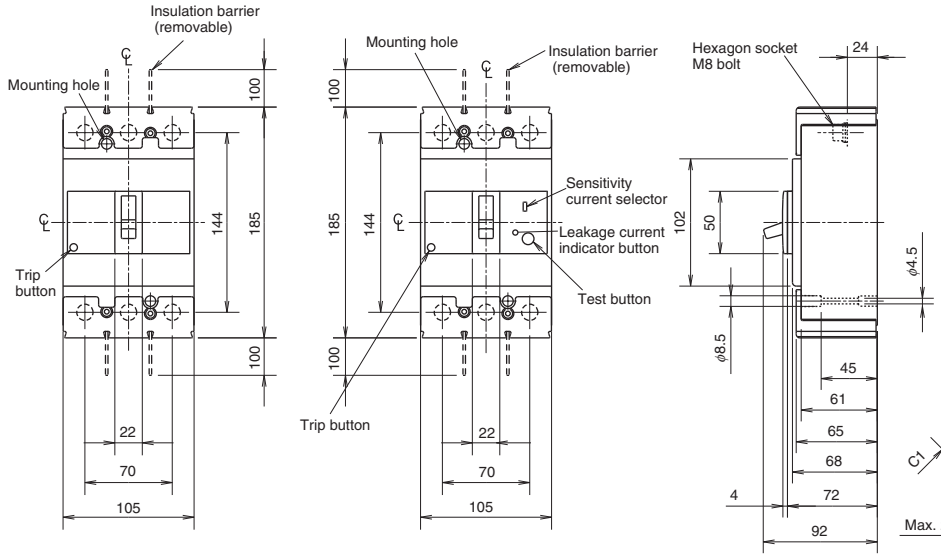


(NF250-SVU, NF250-HVU)

(NV250-SVU, NV250-HVU)

**Compatible crimp terminals** Tightening torque 90lb-in (10N.m)

| Applicable wire range | | Crimp terminal type (*2) | |
|---|---|---|---|
| mm² | AWG (#) (60°C/75°C) | JST | NTM |
| 16.78-26.66 | 4 | R22-8<br>22-S8 | R22-8<br>R22-8S<br>CB22-8S |
| 26.66-42.42 | 2 | R38-8<br>38-S8 | R38-8<br>R38-8S |
| 42.42-60.57 | 1/0 | R60-8<br>60-2BA<br>CB60-S8 | R60-8<br>CB60-8<br>CB60-8S |
| 60.57-76.28 | 2/0 | 70-8 | R70-8 |
| 76.28-96.3 | 3/0 | 80-3BA<br>CB80-S8 | |
| 96.3-117.2 | 4/0 | 100-3BA<br>CB100-S8 | |
| 117.2-152.05 | 250/300MCM | CB150-S8 (*1) | |

JST: Japan Solderless Terminal Mfg. Co.
NTM: Nichifu Co., Ltd.
Notes *1 TCL-2SVU3L can be mounted when using CB150-S8.
*2 When using with a wire connection, use the crimp terminal combination shown above.

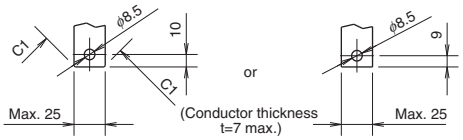


**Conductor drilling for direct connection**

### Front connection (solderless terminal)

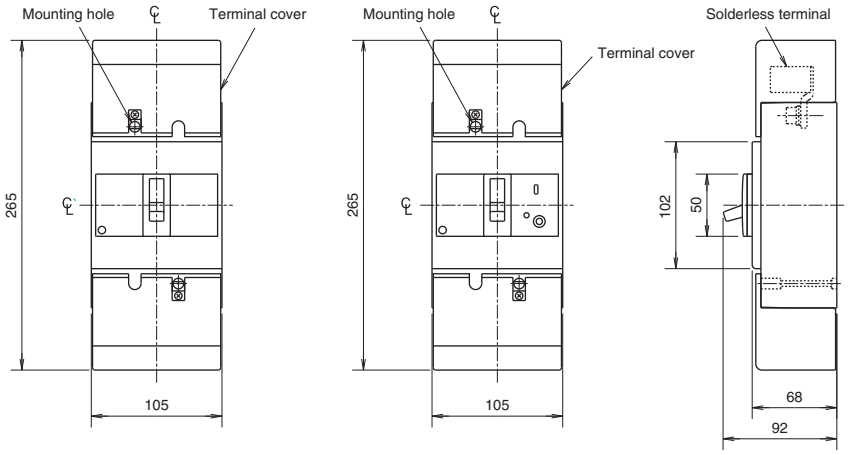


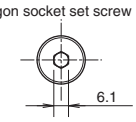


| Wire size 60°C/75°C CU ONLY | Number of strands |
|---|---|
| 4-2AWG | 7 |
| 1-1/0AWG | 19 |
| 3/0-4/0AWG | 19 |
| 250-350MCM | 37 |

The tightening torque is different according to connected wire.
Refer to instruction manual for details.

Remark: Periodical retightening prevents overheating by the setting of twisted strands or the stress of heating and cooling.

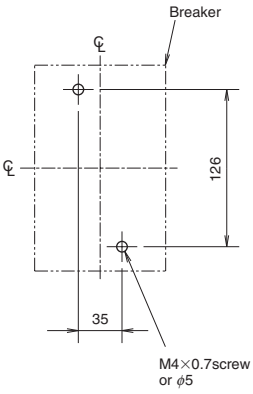


**Drilling plan**

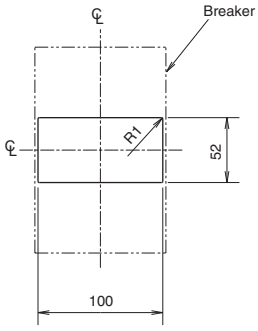


The drilling dimensions have a 1.0 mm clearance on each side of breaker window frame.

**Front panel drilling plan**

# NF-SKW

NF-SKW

| Model | | | | NF-SKW |
|---|---|---|---|---|
| Rated current In (A) at ambient temperature 40˚C | | | | 250 300 350 400 |
| Number of poles | | | | 3 |
| Rated short-circuit breaking capacities (kA) | UL 489 | Rated voltage (AC V) | | 600Y/347 |
| | | AC | 600Y/347V | 20 |
| | | | 480V | 35 |
| | | | 240V | 65 |
| | IEC 60947-2 (Icu/Ics) | Rated insulation voltage Ui (V) | | 690 |
| | | AC | 690V | 10/10 (5/5) (*1) |
| | | | 500V | 30/30 (25/25) (*1) |
| | | | 440V | 42/42 (36/36) (*1) |
| | | | 400V | 45/45 (36/36) (*1) |
| | | | 230V | 85/85 (65/65) (*1) |

Note *1 In case of solderless terminal, interrupting capacity reduces: (/).

## Operating Characteristics (The CE characteristics is noted differently. Contact us for more information.)

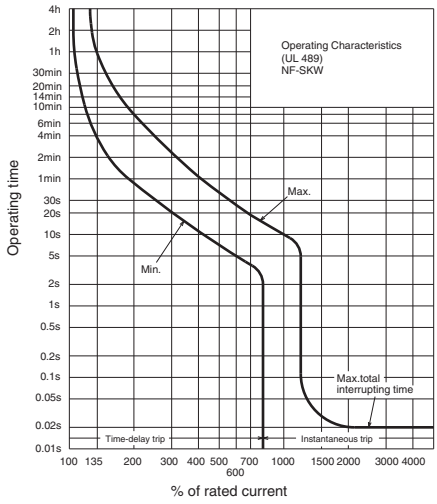


## Internal Accessories

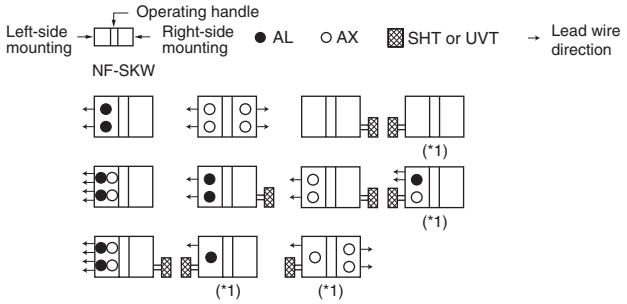


Note *1 Right-side mounting is standard of SHT and UVT. Specify separataly for left-side mounting.

## Temperature Compensation Curve

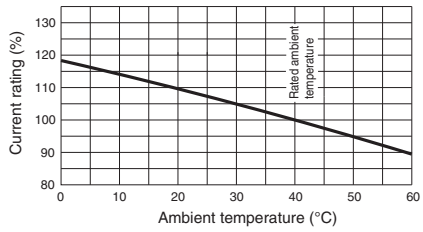


## External Accessories

| Accessories | | Type name | Reference page | Accessories | | | Type name | Reference page |
|---|---|---|---|---|---|---|---|---|
| Operating handle | F | F-4SUL | 119 | Terminal cover | Large | TC-L | TCL-4SKW | 123 |
| | V | V-4SUL | 121 | | | | | |
| Handle lock device | HL | HL-4SP | 129 | | | | | |

## Outline Drawing

### Front connection (Solderless terminal)

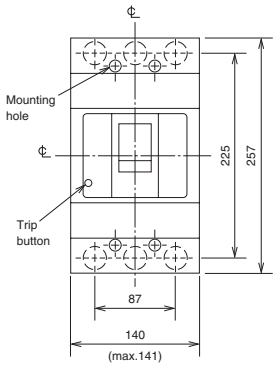


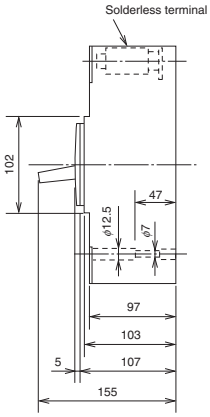


**Hexagon socket set screw**

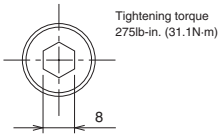


UL

| Ampere ratings | Wire size | Number of strands |
|---|---|---|
| 250A, 300A | 250-350MCM CU | 37 |
| 250A | 350MCM AL | |
| 350A, 400A | 3/0AWG CU ONLY | 19 |

IEC

| Ampere ratings | Wire size (IEC 60228) | |
|---|---|---|
| | Class 2 | Class 5 |
| 250A-350A | 70-185mm$^2$ | 95-185mm$^2$ |
| 400A | 150-240mm$^2$ | 150-185mm$^2$ |

Note Do not remove solderless terminal in any case.
Standard attached parts
Mounting screw: M6×60 (4pcs), Insulating plate: (1pc)

### Front connection (Busbar terminal)

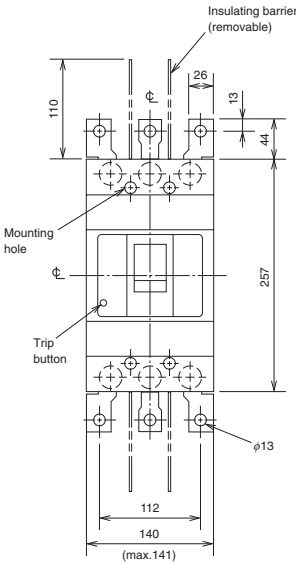


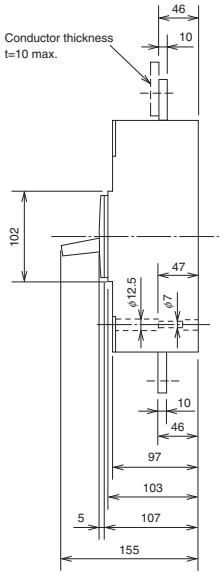


Note Do not remove busbar terminal in any case.
Standard attached parts
Mounting screw: M6×60 (4pcs), Insulating barrier: (4pcs), Insulating plate: (1pc)

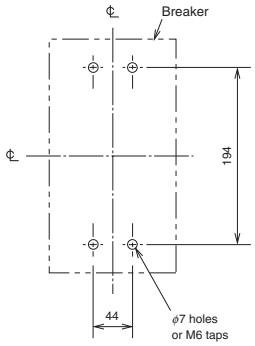


**Drilling plan**

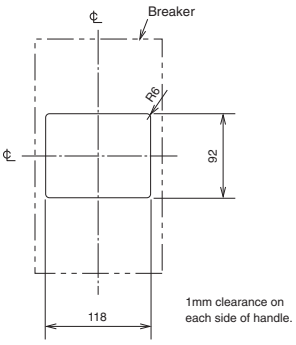


**Front-panel cutout**

**CAUTION**

When mounted in steel or cast box cover must be insulated as shown.
58mm air gap to cover or 0.8mm fibre insulating plate extending 12.7mm out from each side of breaker.

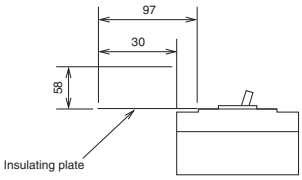


(Line)

# NF-SLW

NF-SLW

| Model | | | | NF-SLW |
|---|---|---|---|---|
| Rated current In (A) at ambient temperature 40°C | | | | 500 600 |
| Number of poles | | | | 3 |
| Rated short-circuit breaking capacities (kA) | UL 489 | Rated voltage (VAC) | | 600Y/347 |
| | | AC | 600Y/347V | 20 |
| | | | 480V | 35 |
| | | | 240V | 85 |
| | IEC 60947-2 (Icu/Ics) | Rated insulation voltage Ui (V) | | 690 |
| | | AC | 690V | 10/10 |
| | | | 500V | 30/30 |
| | | | 440V | 42/42 |
| | | | 400V | 45/45 |
| | | | 230V | 85/85 |

## Operating Characteristics (The CE characteristics is noted differently. Contact us for more information.)

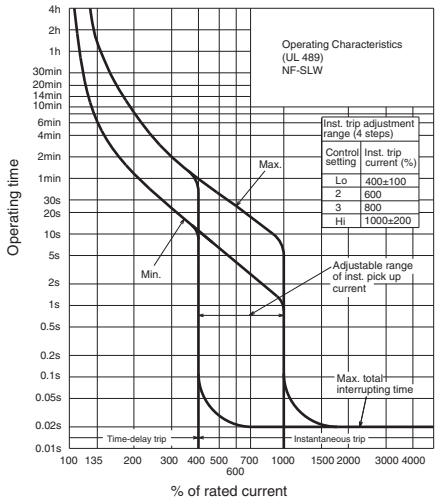


## Internal Accessories

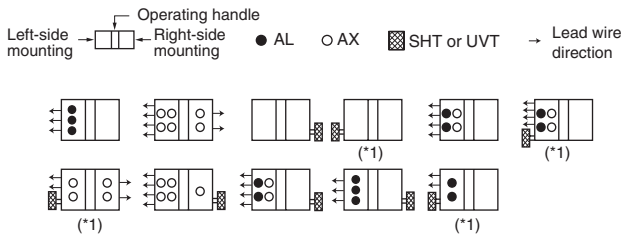


Note *1 Right-side mounting is standard of SHT and UVT. Specify separataly for left-side mounting.

## Temperature Compensation Curve

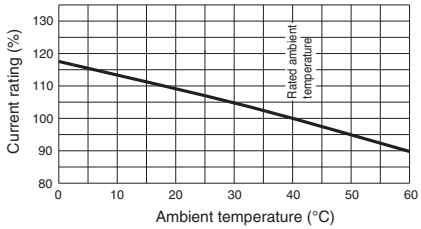


## External Accessories

| Accessories | | Type name | Reference page | Accessories | | | Type name | Reference page |
|---|---|---|---|---|---|---|---|---|
| Operating handle | F | F-6SUL | 119 | Terminal cover | Large | TC-L | TCL-6SLW | 123 |
| | V | V-6SUL | 121 | | | | | |
| Handle lock device | HL | HL-4SP | 129 | | | | | |

## Outline Drawing

### Front connection (Solderless terminal)

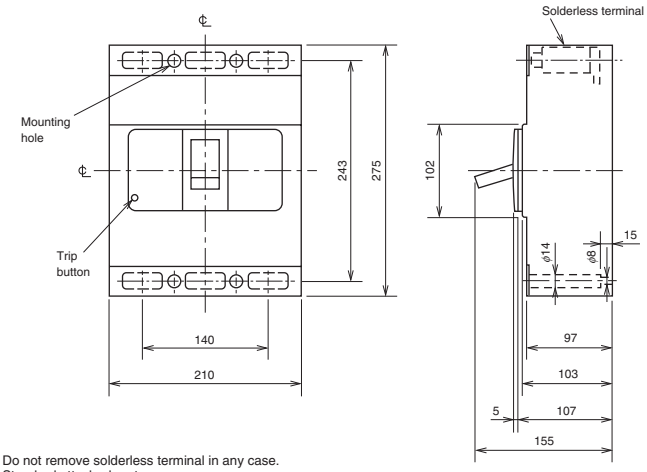


Note Do not remove solderless terminal in any case.
Standard attached parts
Mounting screw: M6×35 (4pcs), Insulating plate: (1pc)

**Hexagon socket set screw**

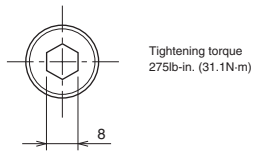


UL

| Ampere ratings | Wire size | Number of strands |
|---|---|---|
| 500A, 600A | 250-350MCM CU ONLY | 37 |

IEC

| Ampere ratings | Wire size (IEC 60228) | |
|---|---|---|
| | Class 2 | Class 5 |
| 500A, 600A | 95-185mm$^2$ | 120-185mm$^2$ |

### Front connection (Busbar terminal)

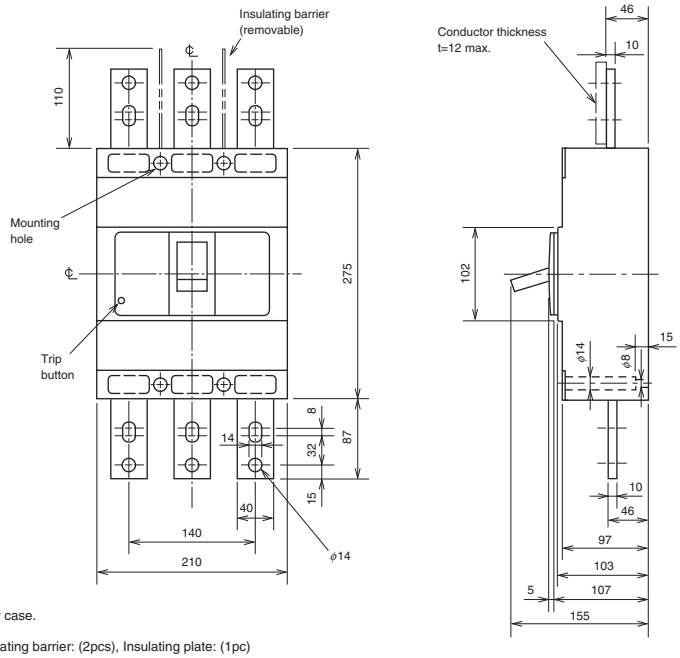


Note Do not remove busbar terminal in any case.
Standard attached parts
Mounting screw: M6×35 (4pcs), Insulating barrier: (2pcs), Insulating plate: (1pc)

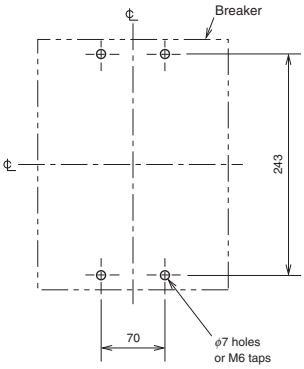


**Drilling plan**

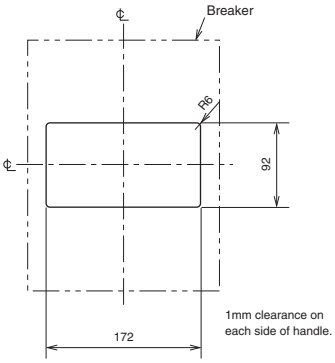


**Front-panel cutout**

**CAUTION**

When mounted in steel or cast box cover must be insulated as shown.
58mm air gap to cover or 0.8mm fibre insulating plate extending 12.7mm out from each side of breaker.

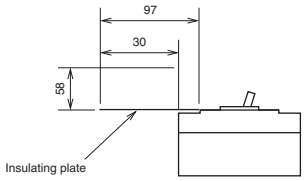


(Line)

# NF250-SEV with MDU
# NF250-HEV with MDU

| Model | | | | NF250-SEV with MDU | | NF250-HEV with MDU | |
|---|---|---|---|---|---|---|---|
| Rated current In (A) Rated ambient temperature 40°C | | | | 250 | | 250 | |
| Current setting Ir (A) | | | | 125-250 | | 125-250 | |
| Number of poles | | | | 3 | 4 | 3 | 4 |
| Rated insulation voltage Ui (V) | | | | 690 | | 690 | |
| Rated short-circuit breaking capacity (kA) | IEC 60947-2 (Icu/Ics) | AC | 690V | 8/8 | | 10/8 | |
| | | | 500V | 18/18 | | 30/23 | |
| | | | 440V | 36/36 | | 50/50 | |
| | | | 415V | 36/36 | | 70/70 | |
| | | | 400V | 36/36 | | 75/75 | |
| | | | 380V | 36/36 | | 75/75 | |
| | | | 230V | 85/85 | | 100/100 | |
| | | DC | 250V | – | | – | |
| Standard attached parts (Front connection) | | | | Mounting screw M4 × 0.7 × 55 (3P: 2psc, 4P: 4pcs) Insulation barrier (3P: 4pcs, 4P: 6pcs) | | | |
| MDU accessories | | Breaker mounting | | MDU, Connection cable (for breaker mounting) | | | |
| | | Panel mounting | | MDU, Panel mounting bracket, Panel mounting screw, Connection cable (for panel mounting) | | | |

**NF250-SEV with MDU (Breaker mounting)**

**NF250-SEV with MDU (Panel mounting)**

## Operating Characteristics

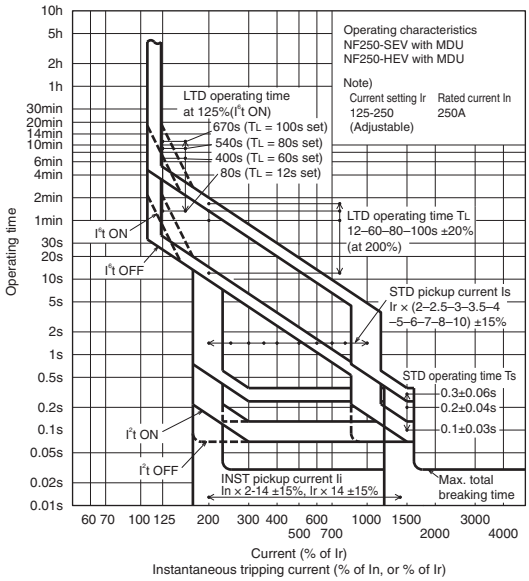


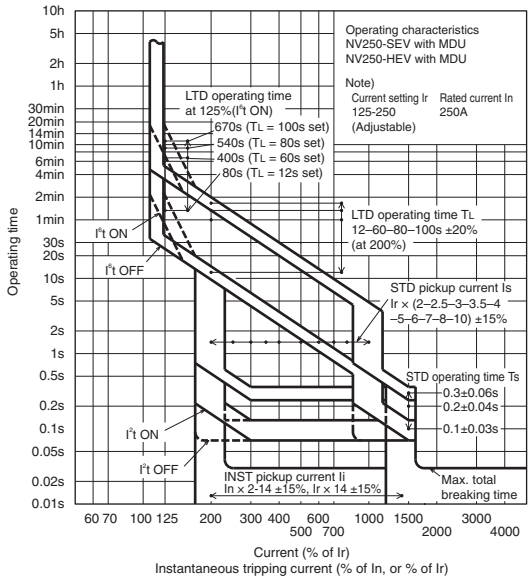


## Internal Accessories

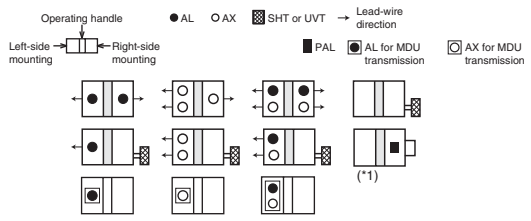


Note *1 SLT-equipped is standard. Control voltage (100-240VAC/100-240VDC) is necessary.

## Current Reducing Curve

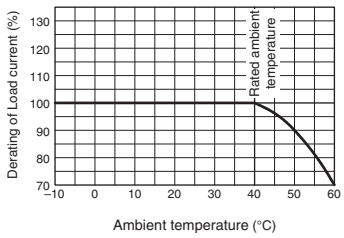


The rated current does not have thermal characteristics. Reduce the current as shown in the curve on the left chart if the ambient temperature exceeds 40 °C.

## External Accessories

| Accessories | | Type name | Reference page |
|---|---|---|---|
| Operating handle (*1) | F | F-2SV | 119 |
| | V | V-2SV | 121 |
| Handle lock device | LC | LC-05SV | 129 |
| | HL (*2) | HLF-05SV | |
| | | HLN-05SV | |
| | HL-S (*1) | HLS-2SV | |

| Accessories | | | | Type name | Reference page |
|---|---|---|---|---|---|
| Mechanical interlock | | MI (*3) | 3P | MI-05SV3 | 131 |
| | | | 4P | MI-2SV4 | |
| Terminal cover | Small | TC-S | 3P | TCS-2SV3 | 123 |
| | Large | TC-L | 3P | TCL-2SV3 | |
| | | | | TCL-2SV3L | |
| | | | 4P | TCL-2SV4 | |
| | Skeleton | TTC | 3P | TTC-2SV3 | |
| | Rear | BTC | 3P | BTC-2SV3 | |
| Electrical operation device (*1) | | | | (*4) | 135 |

Notes *1 Available only for the MDU panel mounting type.
*2 HLF types are used for OFF lock and HLN types for ON lock.
*3 When selecting the MDU breaker mounting, only the MI panel mounting can be manufactured.
*4 Specify the working voltage.

## Outline Drawing

### Front connection

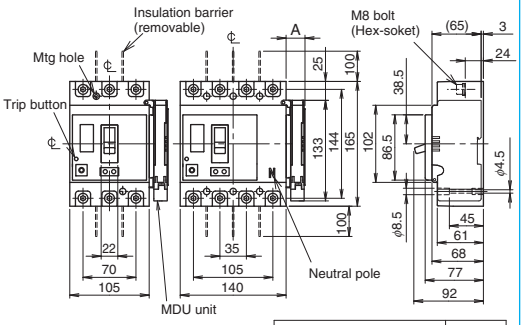


3-pole 4-pole

MDU breaker mounting

| MDU specification | A |
|---|---|
| No transmission, pulse output | 25 |
| CC-Link | 32 |

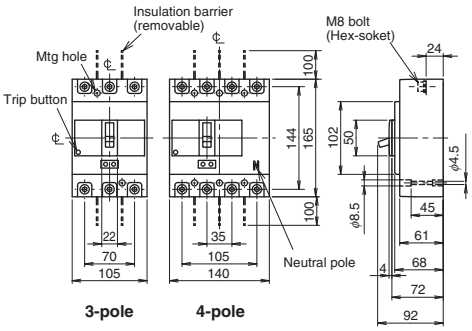


3-pole 4-pole

MDU panel mounting

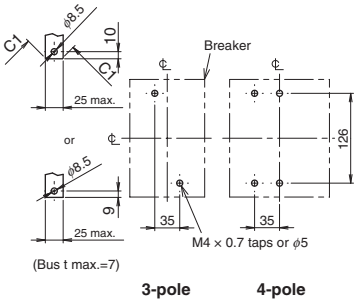


3-pole 4-pole

Bus drilling for direct connection

Drilling plan

### Rear mounting

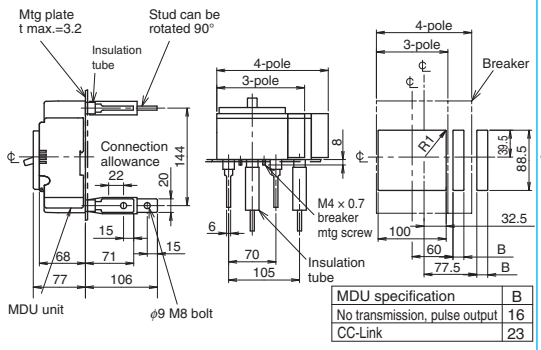


| MDU specification | B |
|---|---|
| No transmission, pulse output | 16 |
| CC-Link | 23 |

MDU breaker mounting Front-plate cut out

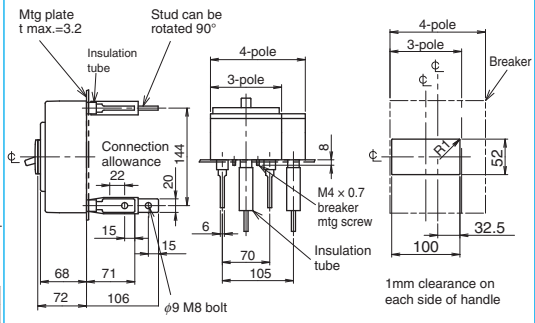


Front-plate cut out

MDU panel mounting

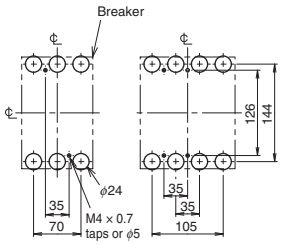


3-pole 4-pole

Drilling plan

### MDU unit terminal for breaker mounting

This figure is without terminal cover.
Please bind wires.

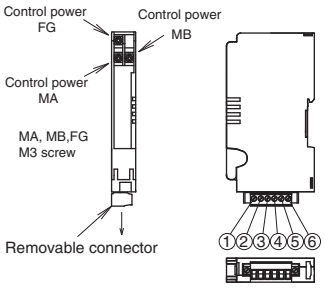


| MDU specification | ① | ② | ③ | ④ | ⑤ | ⑥ |
|---|---|---|---|---|---|---|
| No transmission | – | – | – | – | – | – |
| Pulse output | – | – | – | – | Cb | Ca |
| CC-Link | – | SLD | – | DG | DB | DA |

### MDU panel mounting

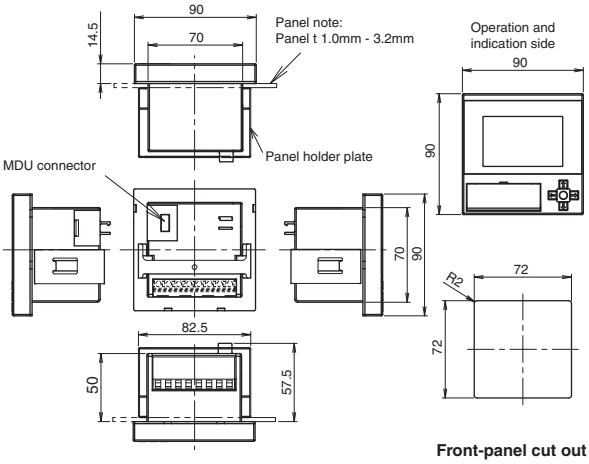


Front-panel cut out

### MDU terminal for panel mounting

This figure is without terminal cover.
Please bind wires.

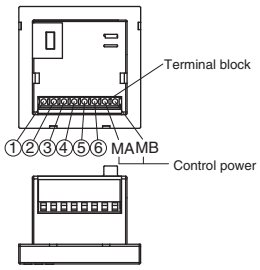


| MDU specification | ① | ② | ③ | ④ | ⑤ | ⑥ |
|---|---|---|---|---|---|---|
| No transmission | – | – | – | – | FG | – |
| Pulse output | Ca | Cb | – | – | FG | – |
| CC-Link | DA | DB | DG | SLD | FG | – |

# NF400-SEP with MDU
# NF400-HEP with MDU

**NF400-SEP with MDU (Breaker mounting)**

| Model | | | | NF400-SEP with MDU | | NF400-HEP with MDU | |
|---|---|---|---|---|---|---|---|
| Rated current In (A) Rated ambient temperature 40°C | | | | 200 225 250 300 350 400 Adjustable | | | |
| Number of poles | | | | 3 | 4 | 3 | 4 |
| Rated operational voltage Ue V | | | | 690 | | 690 | |
| Rated short-circuit breaking capacity (kA) | IEC 60947-2 (Icu/Ics) | AC | 690V | 10/10 | | 10/10 | |
| | | | 500V | 30/30 | | 50/50 | |
| | | | 440V | 42/42 | | 65/65 | |
| | | | 415V | 45/45 | | 70/70 | |
| | | | 400V | 45/45 | | 70/70 | |
| | | | 380V | 45/45 | | 70/70 | |
| | | | 230V | 85/85 | | 100/100 | |
| | | | 200V | 85/85 | | 100/100 | |
| Standard attached parts (Front connection) | | Breaker | | Mounting screw M6 × 60 (4pcs) Insulation barrier (3P: 4pcs, 4P: 6pcs) | | | |
| MDU accessories | | Breaker mounting | | MDU, Connection cable (for breaker mounting) | | | |
| | | Panel mounting | | MDU, Panel mounting bracket, Panel mounting screw, Connection cable (for panel mounting) | | | |

## Operating Characteristics

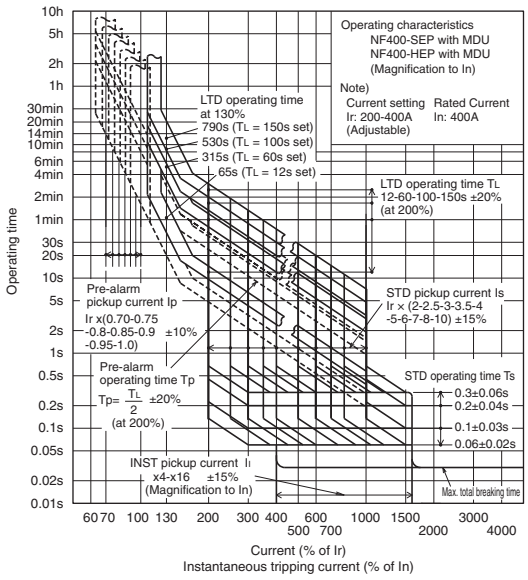


## Internal Accessories

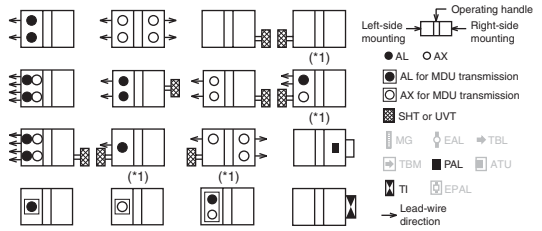


Note *1 Right side mounting is standard of SHT and UVT. Specify separately for left side mounting.

## Current Reducing Curve

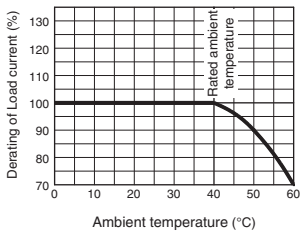


The rated current does not have thermal characteristics. Reduce the current as shown in the curve on the left chart if the ambient temperature exceeds 40°C.

## External Accessories

| Accessories | | | Type name: Breaker mounting | Type name: Panel mounting | Reference page |
|---|---|---|---|---|---|
| Operating handle | F | | – | F-4S | 119 |
| | V | | – | V-4S | 121 |
| Handle lock device | HL | | HL-4SW | S4SW | 129 |
| | HL-S | | – | HL-4SW | |
| Mechanical interlock | MI (*2) | 3P | MI-4SW3 | HLS-4SW | 131 |
| | | 4P | MI-4SW4 | MI-4SW3 | |
| Auxiliary handle | HT | | HT-4SW | MI-4SW4 | 130 |

Notes *1 For NF400SEP with MDU.
*2 When selecting the MDU breaker mounting, only the MI panel mounting can be manufactured.
*3 Specify the operation method and voltage. Order in combination with the breaker unit.

| Accessories | | | | Type name: Breaker mounting | Type name: Panel mounting | Reference page |
|---|---|---|---|---|---|---|
| Terminal cover | Large | TC-L | 3P | – | TCL-4SW3 (*1) | 123 |
| | | | 4P | – | TCL-4SW4 (*1) | |
| | Skeleton | TTC | 3P | TTC-4SW3-MDU | TTC-4SW3 | |
| | | | 4P | TTC-4SW4-MDU | TTC-4SW4 | |
| | Rear | BTC | 3P | BTC-4SW3 (*1) Only line side | BTC-4SW3 (*1) | |
| | | | 4P | BTC-4SW4 Only line side | BTC-4SW4 | |
| Electrical operation device | | NFM | 3P | – | (*3) | 135 |
| | | | 4P | | | |

## Outline Drawing

### Front connection

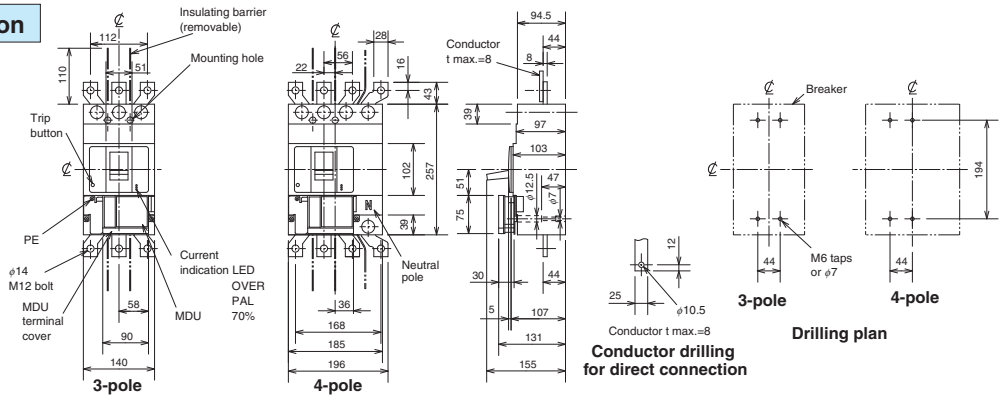


### Rear connection

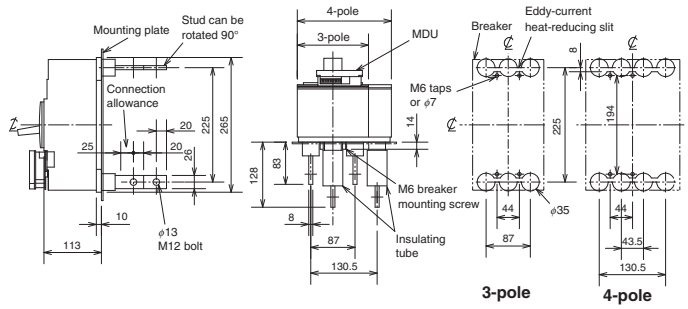


Note The drilling plan is different if insulating barriers are installed.

### Front-plate cutout

1mm clearance on each side of handle. (Load side of breaker mounting has given the space to pass wires to the terminal.)

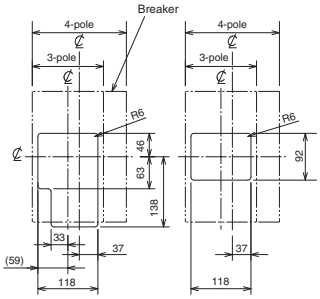


CC-Link ; only MDU panel mounting

## NF400-SEP, NF400-HEP with MDU (No transmission, pulse output)

### MDU panel mounting

MDU is connected with circuit breaker via MDU connection cable.

Space greater than the value shown in the figure below must be secured, and must be separate 10cm or more from the distribution line.

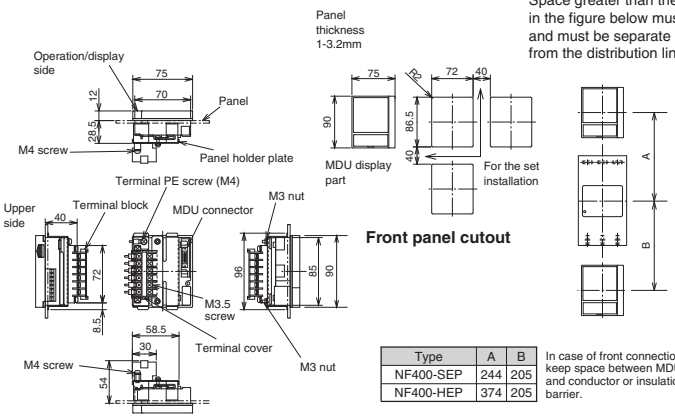


| Type | A | B |
|---|---|---|
| NF400-SEP | 244 | 205 |
| NF400-HEP | 374 | 205 |

In case of front connection, keep space between MDU and conductor or insulation barrier.

### MDU terminal

Figure of the breaker mounting is removed the terminal cover.

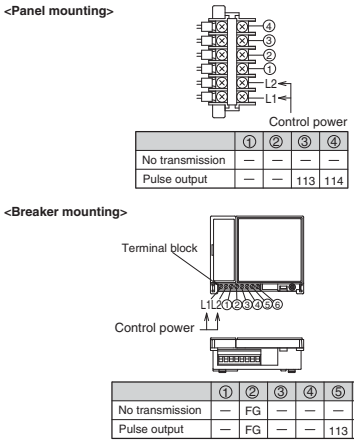


<Panel mounting>

| | ① | ② | ③ | ④ |
|---|---|---|---|---|
| No transmission | — | — | — | — |
| Pulse output | — | — | 113 | 114 |

<Breaker mounting>

| | ① | ② | ③ | ④ | ⑤ | ⑥ |
|---|---|---|---|---|---|---|
| No transmission | — | FG | — | — | — | — |
| Pulse output | — | FG | — | — | 113 | 114 |

## NF400-SEP, NF400-HEP with MDU (CC-Link)

### MDU panel mounting

MDU is connected with circuit breaker via MDU connection cable.

Space greater than the value shown in the figure below must be secured, and must be separate 10cm or more from the distribution line.

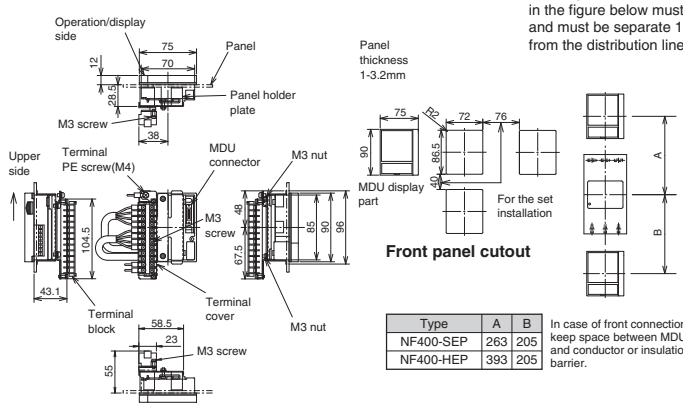


| Type | A | B |
|---|---|---|
| NF400-SEP | 263 | 205 |
| NF400-HEP | 393 | 205 |

In case of front connection, keep space between MDU and conductor or insulation barrier.

### MDU terminal

Figure of the breaker mounting is removed the terminal cover.

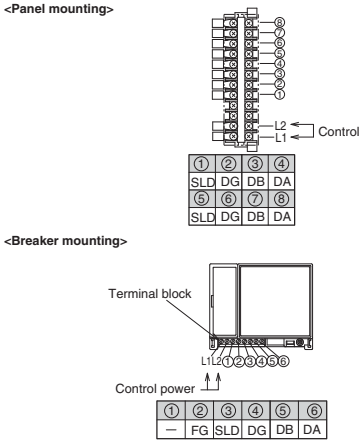


<Panel mounting>

| ① | ② | ③ | ④ |
|---|---|---|---|
| SLD | DG | DB | DA |
| ⑤ | ⑥ | ⑦ | ⑧ |
| SLD | DG | DB | DA |

<Breaker mounting>

| ① | ② | ③ | ④ | ⑤ | ⑥ |
|---|---|---|---|---|---|
| — | FG | SLD | DG | DB | DA |

# NF630-SEP with MDU
# NF630-HEP with MDU
# NF800-SEP with MDU
# NF800-HEP with MDU

**NF630-SEP with MDU (Breaker mounting)**

| Model | | | | NF630-SEP with MDU | | NF630-HEP with MDU | | NF800-SEP with MDU | | NF800-HEP with MDU | |
|---|---|---|---|---|---|---|---|---|---|---|---|
| Rated current In (A) Rated ambient temperature 40°C | | | | 300 350 400 500 600 630 Adjustable | | | | 400 450 500 600 700 800 Adjustable | | | |
| Number of poles | | | | 3 | 4 | 3 | 4 | 3 | 4 | 3 | 4 |
| Rated operational voltage Ue V | | | | 690 | | 690 | | 690 | | 690 | |
| Rated short-circuit breaking capacity (kA) | IEC 60947-2 (Icu/Ics) | AC | 690V | 10/10 | | 15/15 | | 10/10 | | 15/15 | |
| | | | 500V | 30/30 | | 50/50 | | 30/30 | | 50/50 | |
| | | | 440V | 42/42 | | 65/65 | | 42/42 | | 65/65 | |
| | | | 415V | 45/45 | | 70/70 | | 45/45 | | 70/70 | |
| | | | 400V | 45/45 | | 70/70 | | 45/45 | | 70/70 | |
| | | | 380V | 45/45 | | 70/70 | | 45/45 | | 70/70 | |
| | | | 230V | 85/85 | | 100/100 | | 85/85 | | 100/100 | |
| | | | 200V | 85/85 | | 100/100 | | 85/85 | | 100/100 | |
| Standard attached parts (Front connection) (*1) | | Breaker | | Mounting screw M6 × 35 (4pcs) Insulation barrier (3P: 2pcs, 4P: 3pcs) | | | | | | | |
| MDU accessories | | Breaker mounting | | MDU, Breaker mounting plate, Mounting screw for breaker mounting plate, Connection cable (for breaker mounting), MDU Mounting screw | | | | | | | |
| | | Panel mounting | | MDU, Panel mounting bracket, Panel mounting nut, Connection cable (for panel mounting), MDU Mounting screw | | | | | | | |

Note *1 4-pole models are provided with auxiliary handle.

## Operating Characteristics

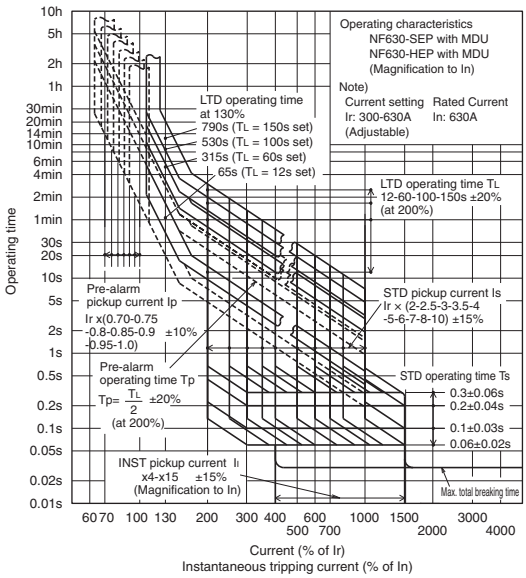


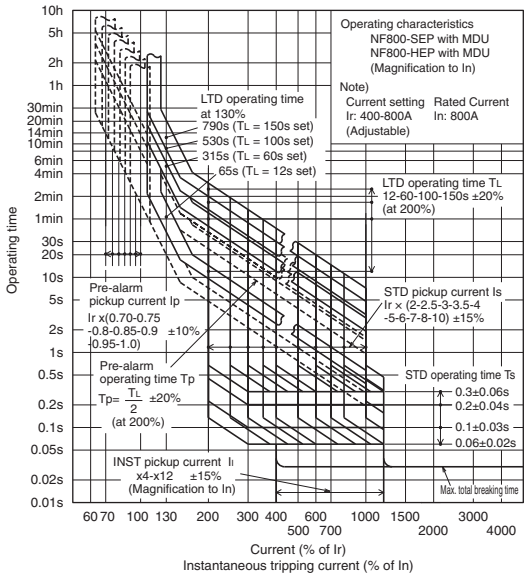


## Internal Accessories

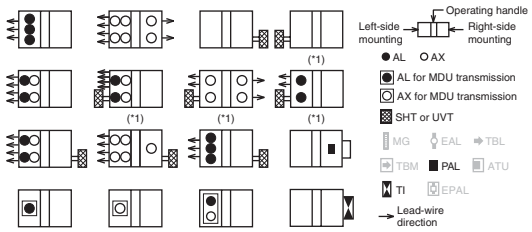


Note *1 Right side mounting is standard of SHT and UVT. Specify separately for left side mounting.

## Current Reducing Curve

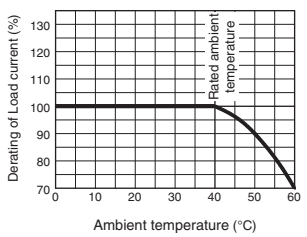


The rated current does not have thermal characteristics. Reduce the current as shown in the curve on the left chart if the ambient temperature exceeds 40°C.

## External Accessories

| Accessories | | | Type name: Breaker mounting | Type name: Panel mounting | Reference page |
|---|---|---|---|---|---|
| Operating handle | F | | – | F-8S | 119 |
| | V | | – | V-8S | 121 |
| Handle lock device | HL | | HL-4SW | HL-4SW | 129 |
| | HL-S | | – | HLS-8SW | |
| Mechanical interlock | MI (*1) | 3P | MI-8SW3 | MI-8SW3 | 131 |
| | | 4P | MI-8SW4 | MI-8SW4 | |
| Auxiliary handle | HT | | HT-4SW | HT-4SW | 130 |

Notes *1 When selecting the MDU breaker mounting, only the MI panel mounting can be manufactured.
*2 Specify the operation method and voltage. Order in combination with the breaker unit.

| Accessories | | | | Type name: Breaker mounting | Type name: Panel mounting | Reference page |
|---|---|---|---|---|---|---|
| Terminal cover | Large | TC-L | 3P | – | TCL-8SW3 | 123 |
| | | | 4P | – | TCL-8SW4 | |
| | Skeleton | TTC | 3P | TTC-8SW3-MDU | TTC-8SW3 | |
| | | | 4P | TTC-8SW4-MDU | TTC-8SW4 | |
| | Rear | BTC | 3P | BTC-8SW3 Only line side | BTC-8SW3 | |
| | | | 4P | BTC-8SW4 Only line side | BTC-8SW4 | |
| Electrical operation device | | NFM | 3P | – | (*2) | 135 |
| | | | 4P | | | |

## Outline Drawing

### Front connection

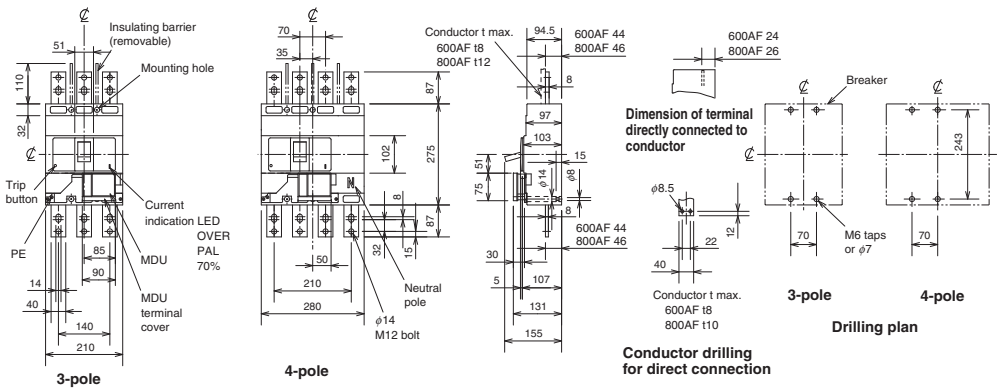


### Rear connection

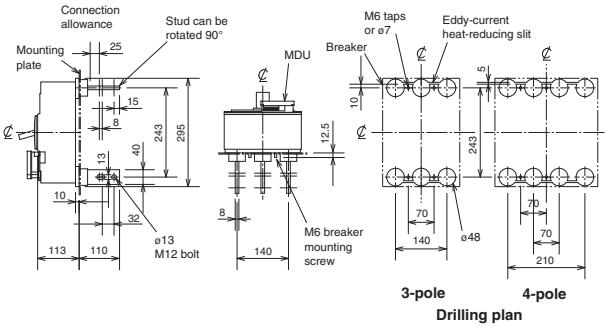


Note The drilling plan is different if insulating barriers are installed.

### Front-plate cutout

1mm clearance on each side of handle. (Load side of breaker mounting has given the space to pass wires to the terminal.)

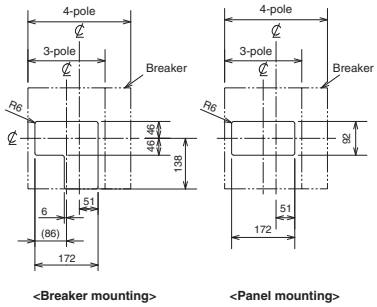


CC-Link ; only MDU panel mounting

## NF630-SEP, NF630-HEP, NF800-SEP, NF800-HEP with MDU (No transmission, Pulse output)

### MDU panel mounting

MDU is connected with circuit breaker via MDU connection cable.

Space greater than the value shown in the figure below must be secured, and must be separate 10cm or more from the distribution line.

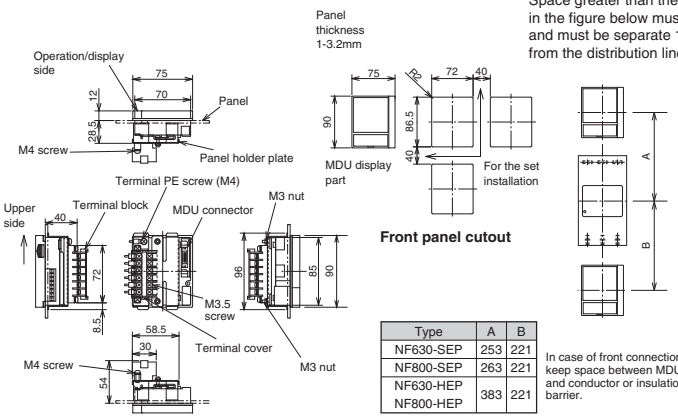


| Type | A | B |
|---|---|---|
| NF630-SEP | 253 | 221 |
| NF800-SEP | 263 | 221 |
| NF630-HEP<br>NF800-HEP | 383 | 221 |

In case of front connection, keep space between MDU and conductor or insulation barrier.

### MDU terminal

Figure of the breaker mounting is removed the terminal cover.

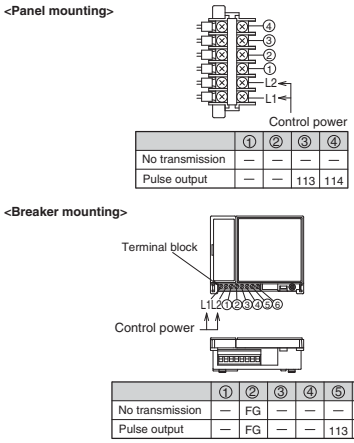


| | ① | ② | ③ | ④ |
|---|---|---|---|---|
| No transmission | — | — | — | — |
| Pulse output | — | — | 113 | 114 |

| | ① | ② | ③ | ④ | ⑤ | ⑥ |
|---|---|---|---|---|---|---|
| No transmission | — | FG | — | — | — | — |
| Pulse output | — | FG | — | — | 113 | 114 |

## NF630-SEP, NF630-HEP, NF800-SEP, NF800-HEP with MDU (CC-Link)

### MDU panel mounting

MDU is connected with circuit breaker via MDU connection cable.

Space greater than the value shown in the figure below must be secured, and must be separate 10cm or more from the distribution line.

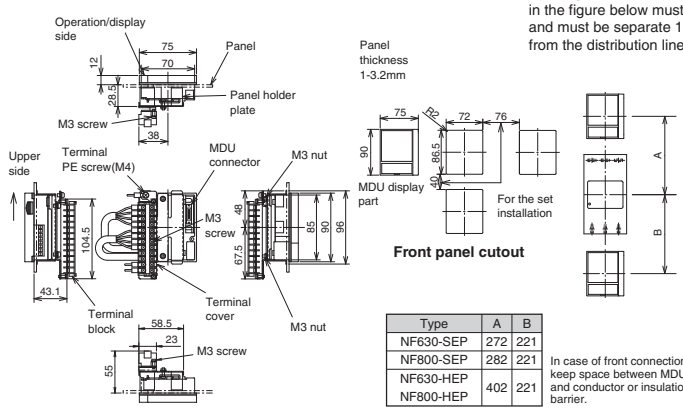


| Type | A | B |
|---|---|---|
| NF630-SEP | 272 | 221 |
| NF800-SEP | 282 | 221 |
| NF630-HEP<br>NF800-HEP | 402 | 221 |

In case of front connection, keep space between MDU and conductor or insulation barrier.

### MDU terminal

Figure of the breaker mounting is removed the terminal cover.

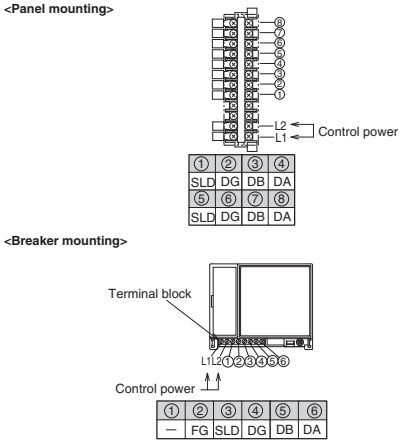


| ① | ② | ③ | ④ |
|---|---|---|---|
| SLD | DG | DB | DA |
| ⑤ | ⑥ | ⑦ | ⑧ |
| SLD | DG | DB | DA |

| ① | ② | ③ | ④ | ⑤ | ⑥ |
|---|---|---|---|---|---|
| — | FG | SLD | DG | DB | DA |

# BH
# BH-P

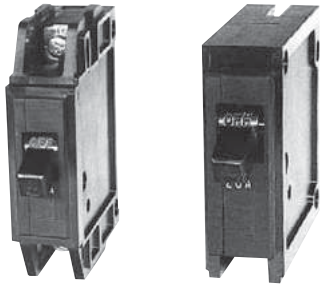

BH BH-P

| Model | | | BH | | | BH-P | | |
|---|---|---|---|---|---|---|---|---|
| Number of poles | | | 1 | 2 | 3 | 1 | 2 | 3 |
| Rated current (A) at ambient temperature 40˚C | | | 70 | 70, 100 | 70, 100 | 70 | 70, 100 | 70, 100 |
| Rated voltage (V) | | AC | 230/400 | | | 230/400 | | |
| | | DC | 125 | | | 125 | | |
| Rated short circuit capacity (kA) | IEC 60898 | AC230/400V | 3 | – | | 3 | – | |
| | | AC400V | – | 3 | | – | 3 | |
| | – | DC125V | 1 | | | 1 | | |

## Operating Characteristics

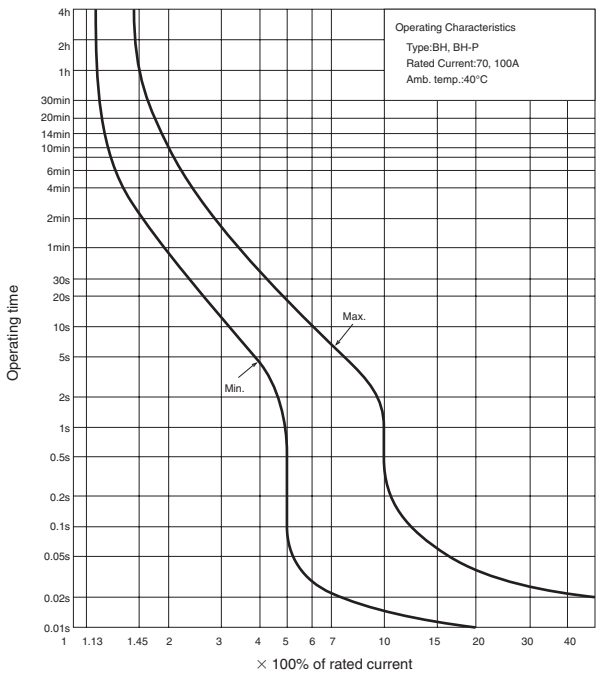


## Temperature Compensation Curve

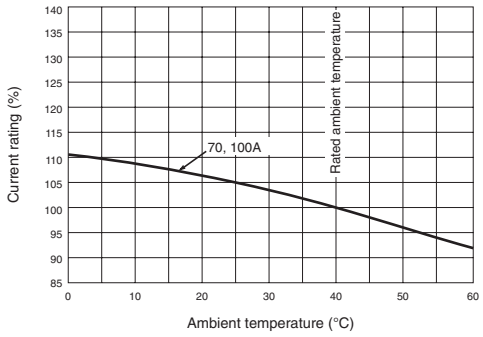


## Outline Drawing

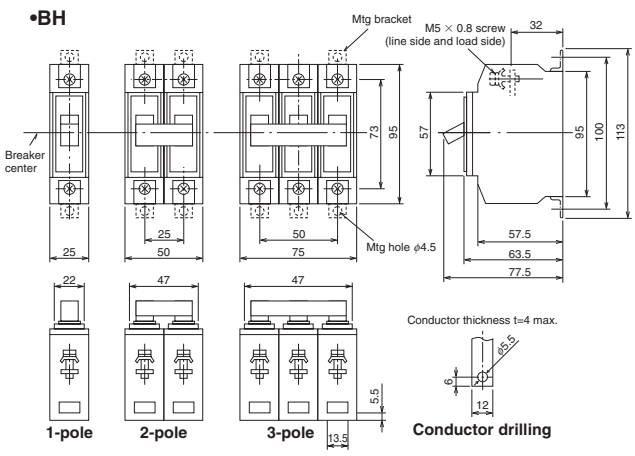


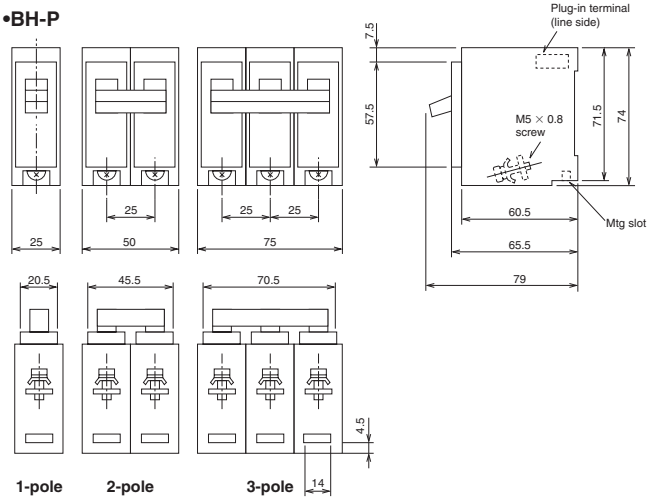


Note Two mounting brackets are used for single-pole breakers. and four for 2-pole and 3-pole breakers.

# BH-S

BH-S

| Model | | | BH-S M3 | | | BH-S M6 | | |
|---|---|---|---|---|---|---|---|---|
| Number of poles | | | 1 | 2 | 3 | 1 | 2 | 3 |
| Rated current (A) at ambient temperature 40°C | | | 5, 10, 15, 20, (25), 30, 40, 50, 60 | 10, 15, 20, (25), 30, 40, 50, 60 | 15, 20, (25), 30,40, 50, 60 | 5, 10, 15, 20, (25), 30, 40, 50, 60 | 10, 15, 20, (25), 30, 40, 50, 60 | 15, 20, (25), 30,40, 50, 60 |
| Rated voltage (V) | | AC | 230/400 | 400 | 400 | 230/400 | 400 | 400 |
| | | DC | – | 125 | – | – | 125 | – |
| Rated short circuit capacity (kA) | IEC 60898 | AC230/400V | 3 | – | | 6 | – | |
| | | AC400V | – | 3 | | – | 6 | |
| | – | DC125V | – | 1 | – | – | 1 | – |

## Operating Characteristics

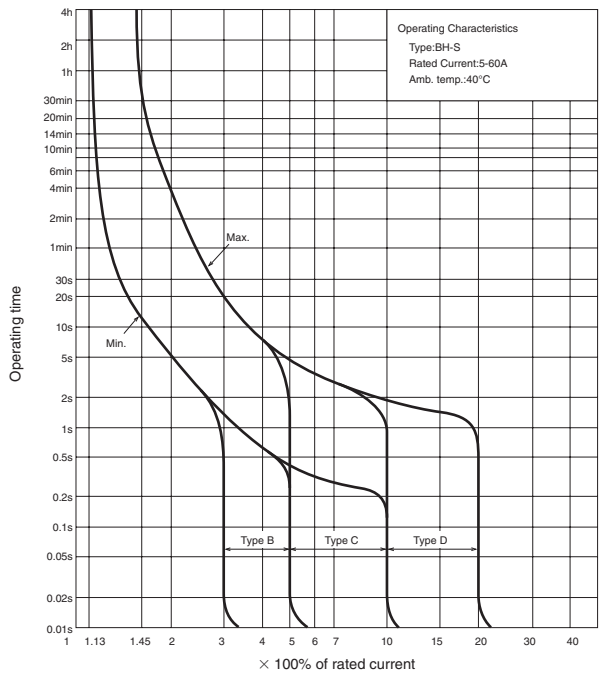


## Temperature Compensation Curve

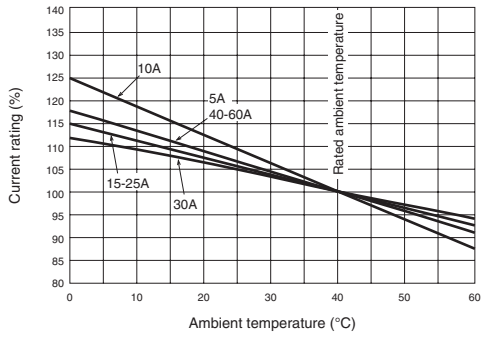


## Outline Drawing

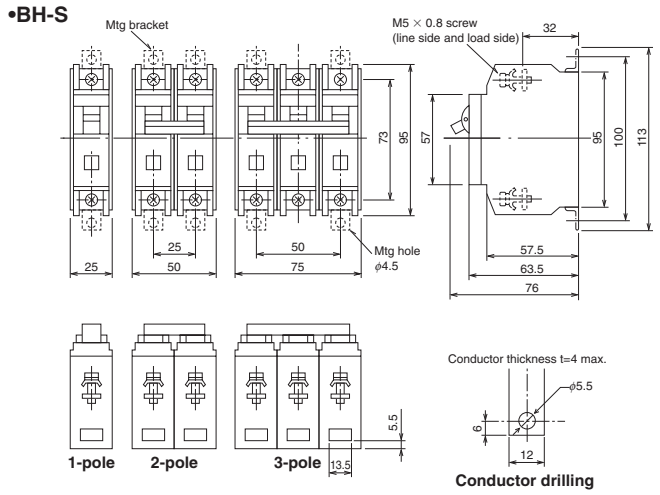


Note Two mounting brackets are used for single-pole breakers.
and four for 2-pole and 3-pole breakers.

# BH-PS

| Model | | | BH-PS M3 | | | BH-PS M9 | | |
|---|---|---|---|---|---|---|---|---|
| Number of poles | | | 1 | 2 | 3 | 1 | 2 | 3 |
| Rated current (A) at ambient temperature 40°C | | | 10, 15, 20, 30, 40, 50, 60 | 10, 15, 20, 30, 40, 50, 60 | 15, 20, 30, 40, 50, 60 | 6, 10, 16, 20, (25), 32, 40, 50, 60 | 10, 16, 20, (25), 30, 40, 50, 60 | 10, 16, 20, (25), 32, 40, 50, 60 |
| Rated voltage (V) | | AC | 230/400 | 400 | 400 | 230/400 | 400 | 400 |
| | | DC | – | 125 | – | – | | |
| Rated short circuit capacity (kA) | IEC 60898 | AC230/400V | 3 | – | | 9 | – | |
| | | AC400V | – | 3 | | – | 9 | |
| | – | DC125V | – | 1 | – | – | | |

BH-PS

## Operating Characteristics

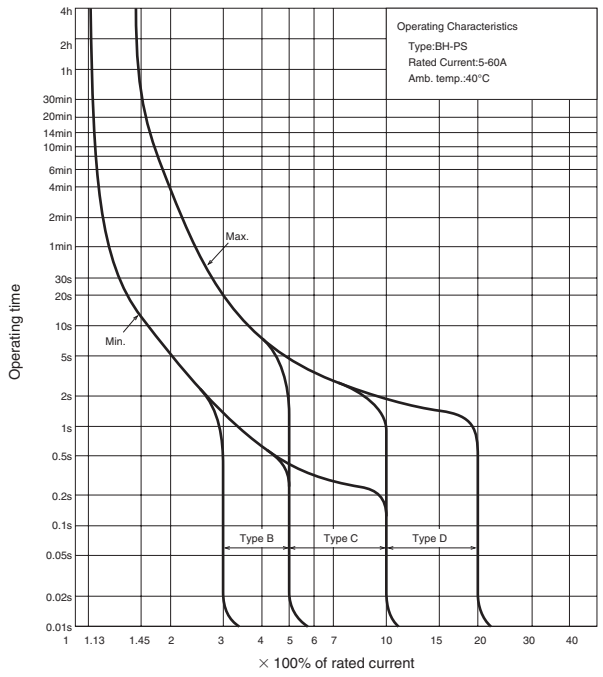


## Temperature Compensation Curve

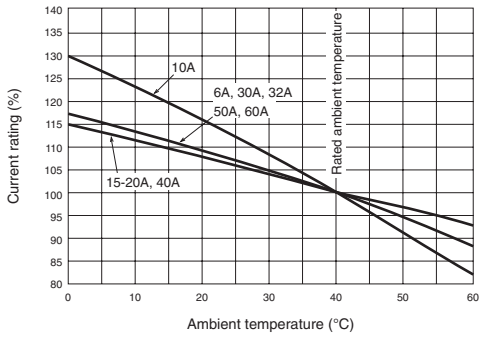


## Outline Drawing

•BH-PS

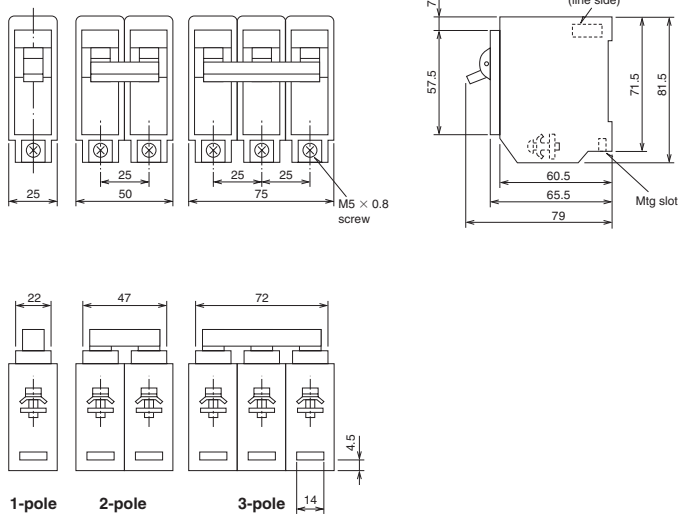

# BH-D6
# BH-D10

**BH-D6**

| Model | | | | BH-D6 | | | | | BH-D10 | | | | BH-D10 (For DC) | |
|---|---|---|---|---|---|---|---|---|---|---|---|---|---|---|
| Number of poles (P) | | | | 1 | 2 | 3 | 4(3+N) (*1) | 2(1+N) (*1) | 1 | 2 | 3 | 4(3+N) (*1) | 1 | 2 |
| Instantaneous tripping | | | | Type B, C, D | | | | Type B, C | Type B, C, D | | | | Type B, C | |
| Rated insulation voltage Ui (V) | | | | 440 | | | | | 440 | | | | 250 | |
| Rated current In (A) at ambient temperature 30°C | | | | 0.5, 1, 1.6, 2, 3, 4, 6, 10, 13, 16, 20, 25, 32, 40, 50, 63 | | | | 0.5, 1, 1.6, 2, 3, 4, 6, 10, 13, 16, 20, 25, 32, 40 | 0.5, 1, 1.6, 2, 3, 4, 6, 10, 13, 16, 20, 25, 32, 40, 50, 63 | | | | 0.5, 1, 1.6, 2, 3, 4, 6, 10, 13, 16, 20, 25, 32, 40, 50, 63 | |
| Rated short-circuit capacity (kA) | IEC60898-1 GB10963.1 (Icn) | AC | 230V | 6 | – | | | 6 | 10 | – | | | 6 | – |
| | | | 230/400V | 6 | – | | | – | 10 | – | | | 6 | – |
| | | | 400V | – | 6 | | | – | – | 10 | | | – | 6 |
| | IEC60898-2 GB10963.2 (Icn) | DC | 125V | – | | | | | – | | | | 10 | – |
| | | | 250V | – | | | | | – | | | | – | 10 |

Note *1 N pole is a switched neutral pole (without overcurrent release device).

## Operating Characteristics

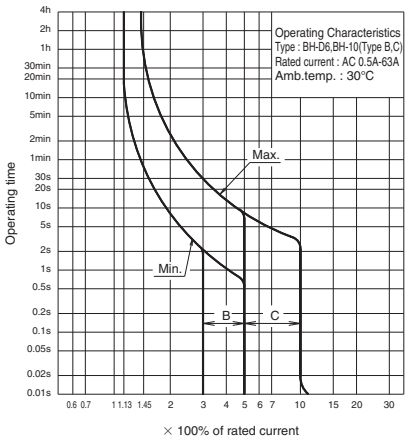


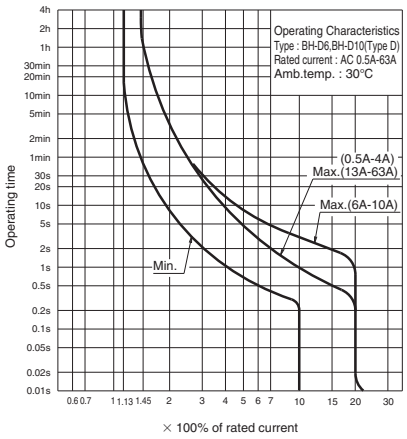


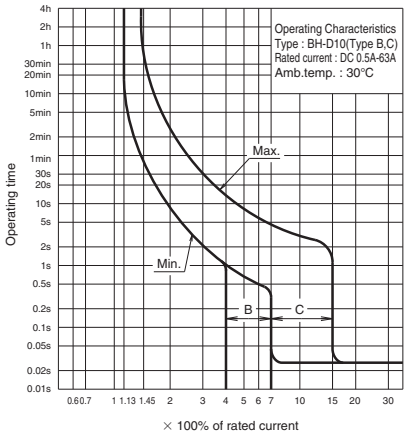


## Outline Drawing

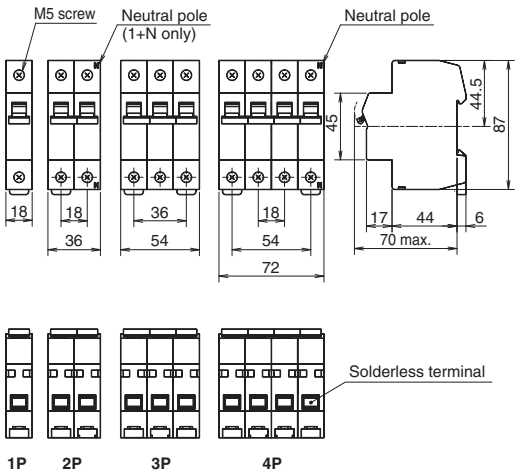


## Temperature Compensation Curve

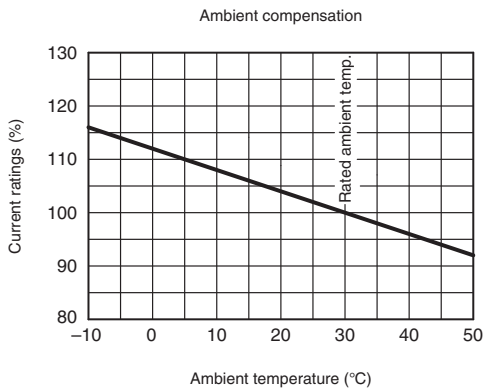

# BH-DN

**BH-DN**

| Model | | | | BH-DN |
|---|---|---|---|---|
| Number of poles (P) | | | | 2 (1+N) (*1) |
| Instantaneous tripping | | | | Type C |
| Rated insulation voltage Ui (V) | | | | 230 |
| Rated current In (A) at ambient temperature 30˚C | | | | 6, 10, 16, 20 |
| Rated short-circuit capacity (kA) | IEC60898-1 GB10963.1 (Icn) | AC | 230V | 4.5 |

Note *1 N pole is a switched neutral pole (without overcurrent release device).

## Operating Characteristics

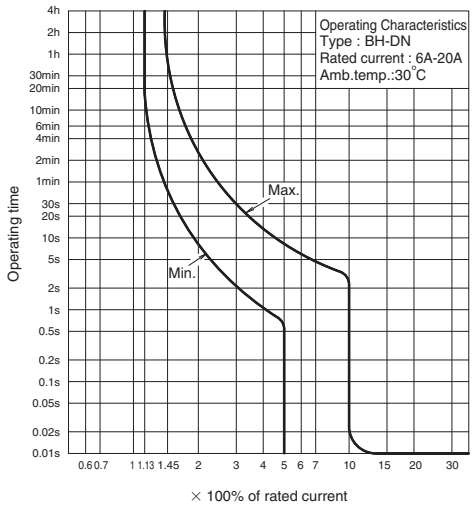


## Outline Drawing

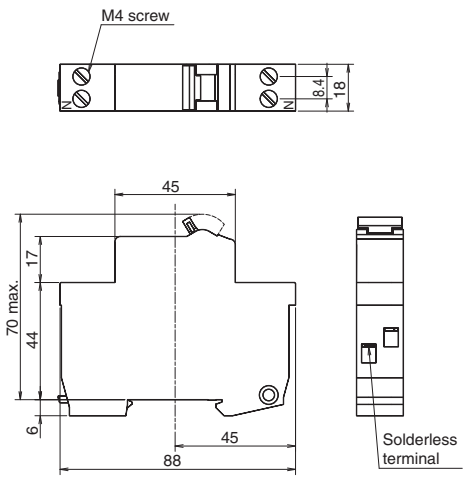


## Temperature Compensation Curve

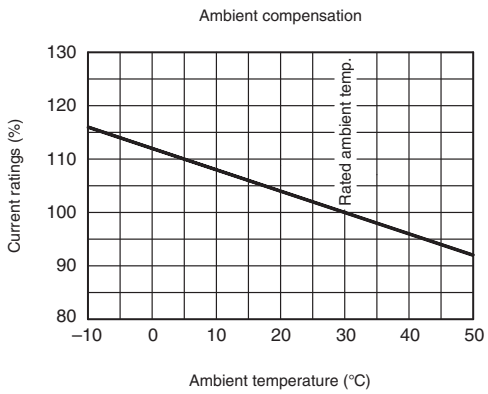

# BV-D

BV-D

| Model | BV-D | |
|---|---|---|
| Number of poles (P) | 2 (1+N) (*1) | 4 (3+N) (*1) (*2) |
| Rated operational voltage Ue (VAC) | 230 | 230/400 |
| Rated current In (A) at ambient temperature 30°C | 25, 40, 63 | |
| Rated current sensitivity IΔn (mA) | 30, 300 | |
| Max. operating time at 5IΔn (s) | 0.04 | |
| Pulsating current sensitivity | Type AC | |
| Residual operation | Dependent on line voltage | |
| Rated making and breaking capacity Im (A) | 500 (In 25, 40A)<br>630 (In63A) | |
| Rated conditional short-circuit current Inc (kA) | 6 | |
| Rated residual making and breaking capacity IΔm (A) | 500 (In 25, 40A)<br>630 (In63A) | |
| Rated conditional residual short-circuit current IΔc (kA) | 6 | |

Notes *1 N pole is a switched neutral pole (without overcurrent release device).
*2 For use to three phase 4-wire type. When using, it be sure to connect the neutral wire to the neutral phase. Not available for use to three phase 3-wire type.

## Operating Characteristics

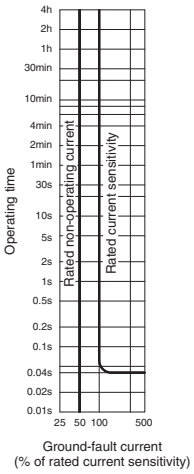


## Outline Drawing

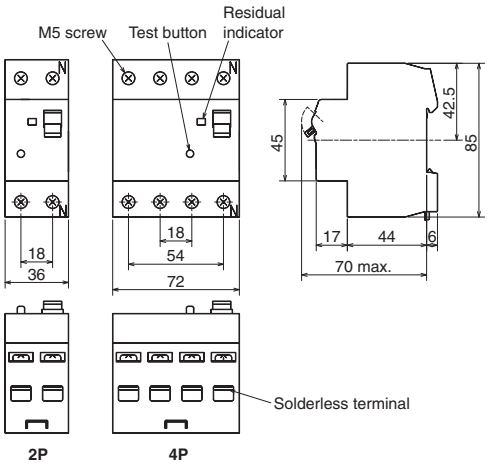

# BV-DN

**BV-DN**

| Model | | | | BV-DN |
|---|---|---|---|---|
| Number of poles (P) | | | | 2 (1+N) (*1) |
| Rated operational voltage Ue (VAC) | | | | 230 |
| Rated current In (A) at ambient temperature 30˚C | | | | 6, 10, 16, 20, 25, 32, 40 |
| Instantaneous tripping | | | | Type C |
| Rated current sensitivity IΔn (mA) | | | | 30, 100, 300 |
| Max. operating time at 5IΔn (s) | | | | 0.04 |
| Pulsating current sensitivity | | | | Type AC |
| Residual operation | | | | Dependent on line voltage |
| Rated short-circuit capacity (kA) | IEC61009-1 GB16917.1 (Icn) | AC | 230V | 4.5 |

Note *1 N pole is a switched neutral pole (without overcurrent release device).

## Operating Characteristics

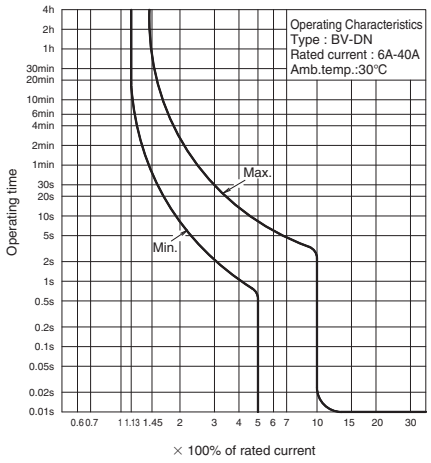


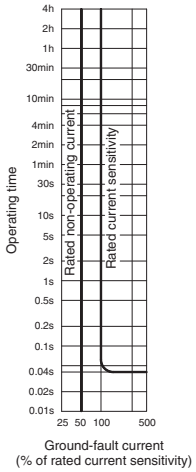


## Outline Drawing

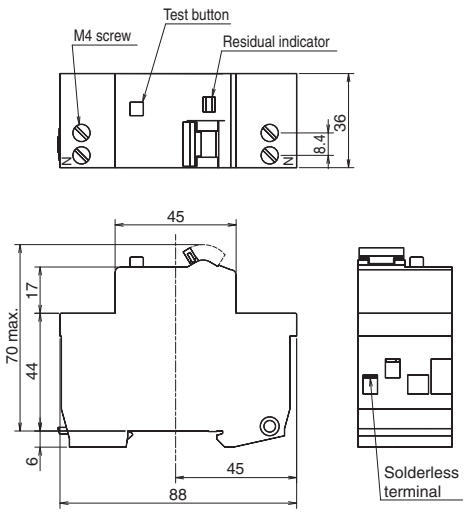


## Temperature Compensation Curve

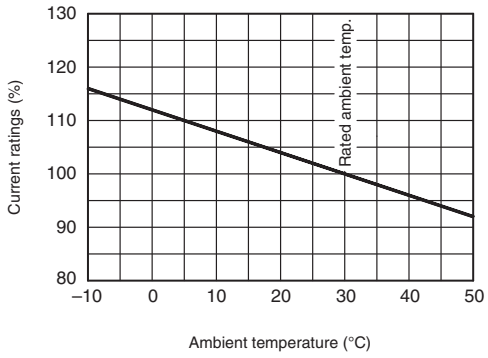

# KB-D

KB-D

| Model | KB-D | | | |
|---|---|---|---|---|
| Number of poles (P) | 1 | 2 | 3 | 4 (3+N) (*1) |
| Utilization category | AC22A class | | | |
| Rated insulation voltage Ui (V) | 250 | 440 | | |
| Rated voltage Ue (VAC) | 230 | 400 | | |
| Rated current In (A) at ambient temperature 30˚C | 32, 63, 80 | | | |
| Short-time withstand current (A) | 20×In , 1sec | | | |
| Short-time making current (A) | 20×In | | | |

Note *1 N pole is a switched neutral pole (without overcurrent release device).

## Outline Drawing

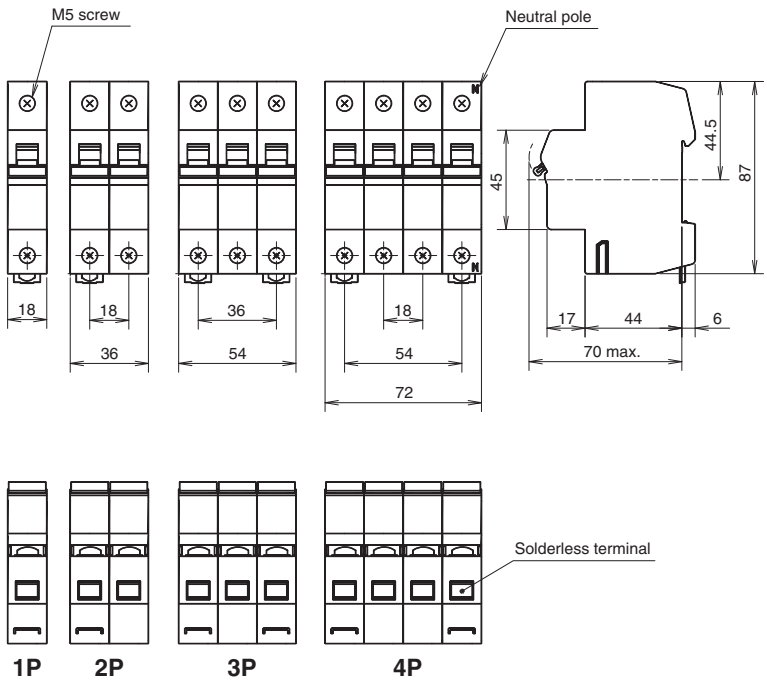

# CP30-BA

CP30-BA

| Frame (A) | | | | 30 | | |
|---|---|---|---|---|---|---|
| Model | | | | CP30-BA | | |
| Number of poles | | | | 1 | 2 | 3 |
| Rated impulse withstand voltage Uimp (kV) | | | | 2.5 | | |
| Rated current (A) | | | | 0.1, 0.25, 0.3, 0.5, 1, 2, 3, 5, 7, 10,15, 20, 30 | | |
| Rated short-circuit capacity (kA) | UL 1077 CSA C22.2 No.235 | Rated voltage (V) | AC (V) | 250 | | |
| | | | DC (V) | 65 | 125 | – |
| | | AC | | 2.5kA at 250V | | |
| | | DC | | 2.5kA at 65V | 2.5kA at 125V | – |
| | IEC 60934 EN 60934 | Rated insulation voltage Ui (V) | | 250 | | |
| | | AC | | 2.5kA at 230V | | |
| | | DC | | 2.5kA at 60V | 2.5kA at 120V | – |
| | EN 60947-2 IEC 60947-2 (Icu/Ics) | Rated insulation voltage Ui (V) | | 250 | | |
| | | AC | | 2.5/2.5kA at 230V | | |
| | | DC | | 2.5/2.5kA at 60V | 2.5/2.5kA at 120V | – |
| AC-DC common use | | | | ● | | – |
| Operating characteristics | | | | Instantaneous type (I) Medium type (M),(MD) Slow type (S),(SD) Fast type (F) | | |
| Mode of tripping | | | | Instantaneous type (I): magnetic only Other type (M, MD, S, SD, F):hydraulic-magnetic | | |

## Operating Characteristics

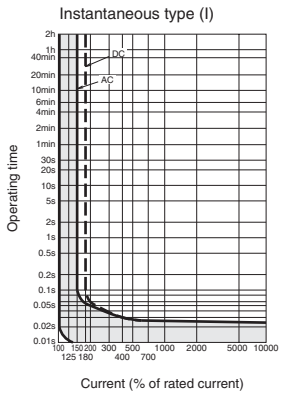


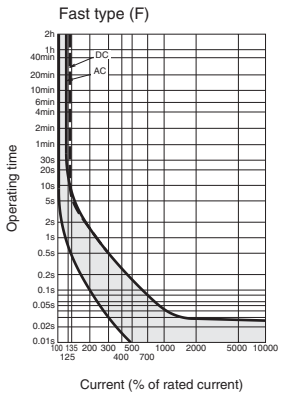


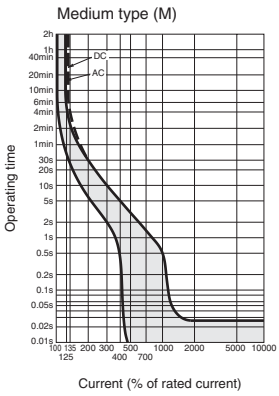


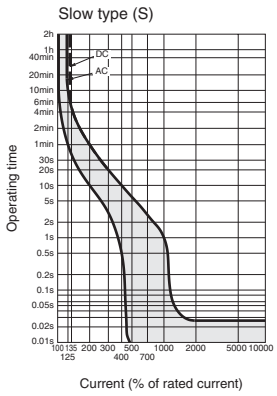


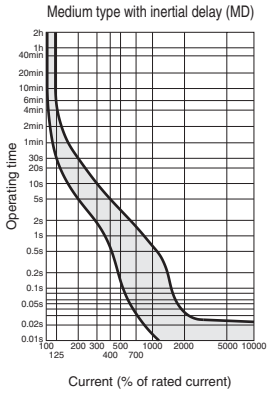


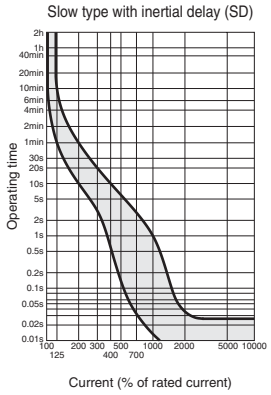


## Outline Drawing

•CP30-BA

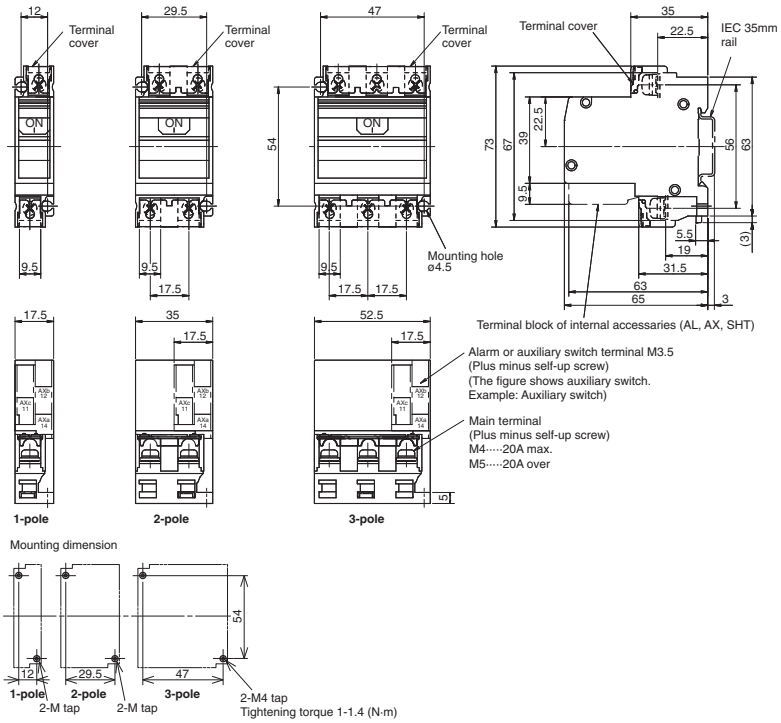


## Temperature Characteristics Curve

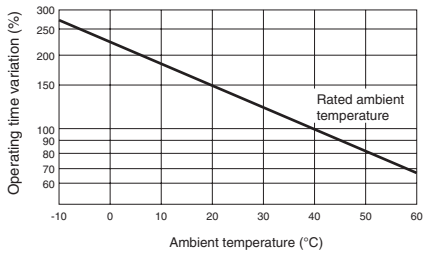

## (1) Dimensions of electrical operated circuit breakers

The following concept is applied for the dimensions of the electrical operated circuit breaker. Please understand this before using this type of breaker.

| Connection method | Outline dimensions listing method |
|---|---|
| Front connection (Rear connection) | |
| Rear connection Plug-in | The drilling dimensions and connection related dimensions are the same as the dimensions for the breaker body. Refer to the dimension drawings of each model. Note that for the rear connection type, four mounting holes are required even for the 2-pole or 3-pole types. |

| Model | Listed page | Model | Listed page |
|---|---|---|---|
| NF125-CV/SV/HV<br>NV125-CV/SV/HV | 229 | NF400-CW/SW/SEW/HEW/REW<br>NF630-CW/SW/SEW/HEW/REW<br>NF400-UEW (3P)<br>NV400-CW/SW/SEW/HEW/REW<br>NF400-UEW (4P)<br>NV630-CW/SW/SEW/HEW | 230 |
| NF125-UV | (*1) | | |
| NF125-SEV/HEV/RV/ZEV<br>NF250-CV/SV/HV/SEV/HEV<br>NF250-RV<br>NF125-SGV/LGV/HGV/RGV<br>NF160-SGV/LGV/HGV<br>NF250-SGV/LGV/HGV/RGV<br>NV125-SEV/HEV<br>NV250-CV/SV/HV/SEV/HEV | 230 | NF800-CEW/SEW/HEW/REW/SDW<br>NF800-UEW<br>NV800-SEW/HEW | 231 |
| | | NF1000-SEW, NF1250-SEW/SDW<br>NF1600-SEW/SDW | 232 |
| NF250-UV | (*1) | | |

## (2) Front connection (Rear connection)

NF125-CV, NF125-SV, NF125-HV
NV125-CV, NV125-SV, NV125-HV

**Front connection**

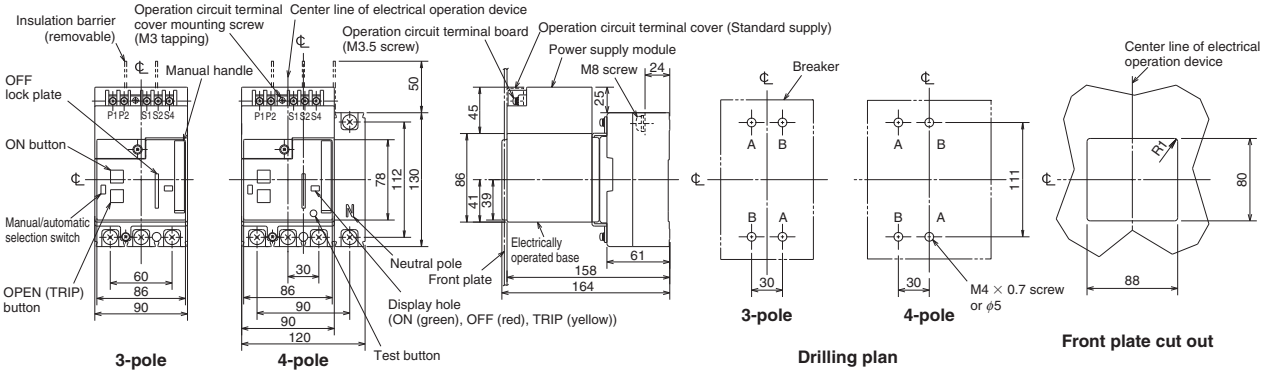


Remarks: 1. This cannot be mounted on the 2-pole breaker.
2. The test button is equipped only on the earth leakage circuit breaker.

NF125-SEV, NF125-HEV, NF125-RV
NF250-CV, NF250-SV, NF250-HV, NF250-SEV, NF250-HEV, NF250-RV
NV125-SEV, NV125-HEV
NV250-CV, NV250-SV, NV250-HV, NV250-SEV, NV250-HEV
NF125-SGV/LGV/HGV/RGV
NF160-SGV/LGV/HGV
NF250-SGV/LGV/HGV/RGV

**Front connection**

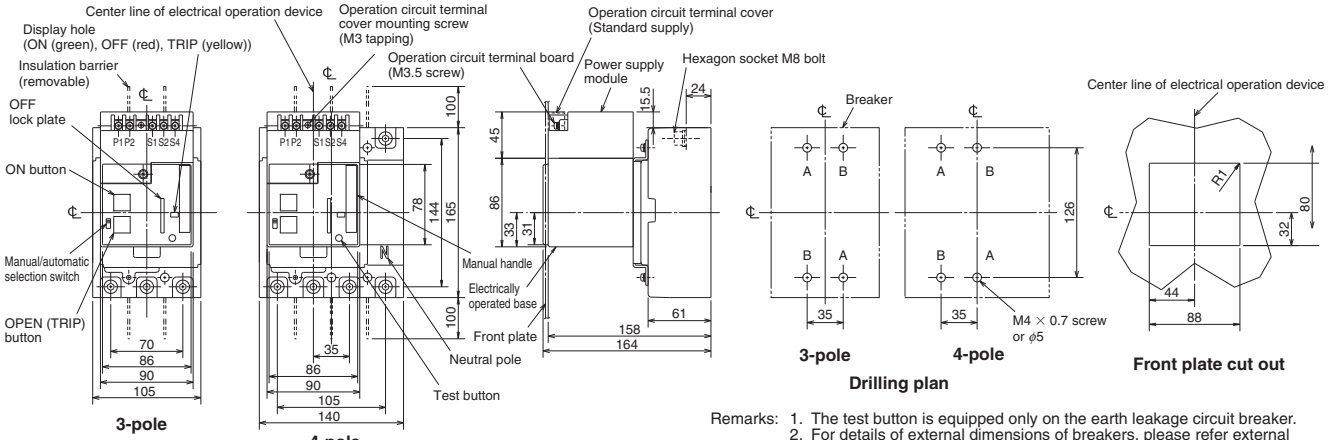


Remarks: 1. The test button is equipped only on the earth leakage circuit breaker.
2. For details of external dimensions of breakers, please refer external dimension drawing of each model.

## NF400-CW, NF400-SW, NF400-SEW, NF400-HEW, NF400-REW, NF630-CW, NF630-SW, NF630-SEW, NF630-HEW, NF630-REW Motor drive type

**Front connection**

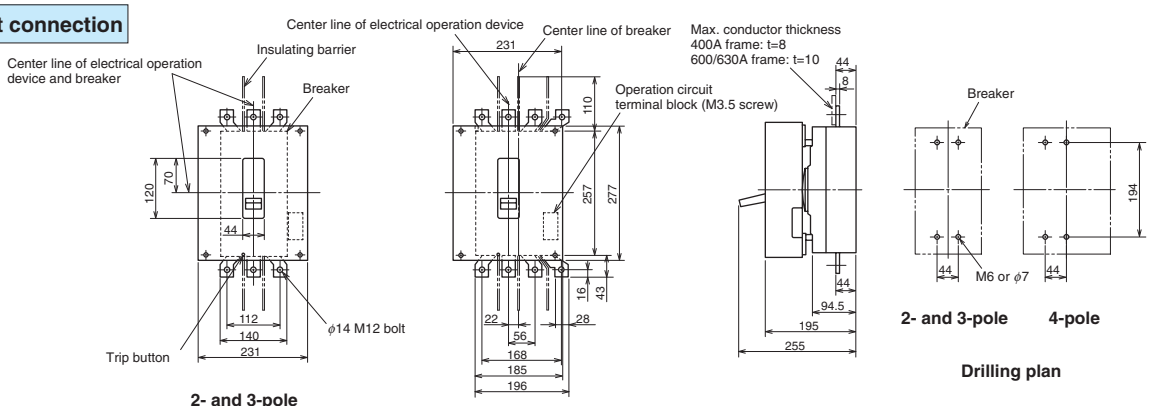


2- and 3-pole

4-pole

2- and 3-pole 4-pole

Drilling plan

Remark: 1. 2-pole models are 3-pole with the central pole conductor removed.

## NF400-UEW (3-pole) Motor drive type

**Front connection**

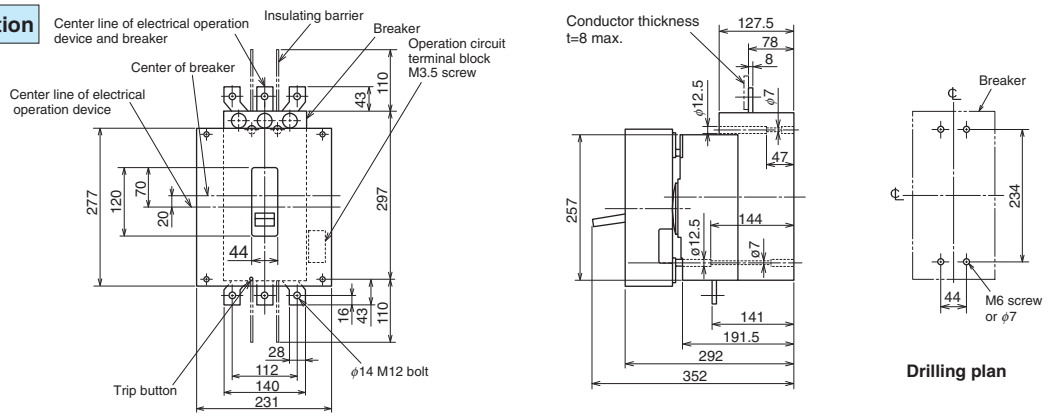


Drilling plan

## NV400-CW, NV400-SW, NV400-SEW, NV400-HEW, NV400-REW, NV630-CW, NV630-SW, NV630-SEW, NV630-HEW Motor drive type

**Front connection**

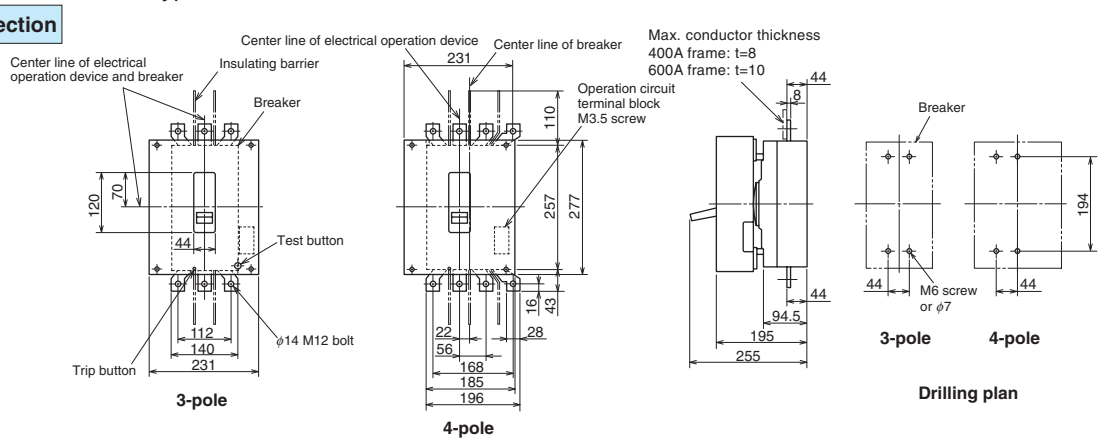


3-pole

4-pole

3-pole 4-pole

Drilling plan

## NF400-UEW (4-pole) Motor drive type

**Front connection**

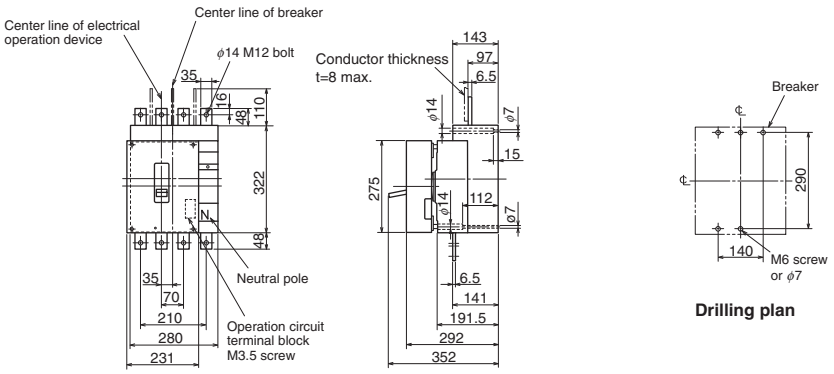


Drilling plan

## NF800-CEW, NF800-SDW, NF800-SEW, NF800-HEW, NF800-REW Motor drive type

**Front connection**

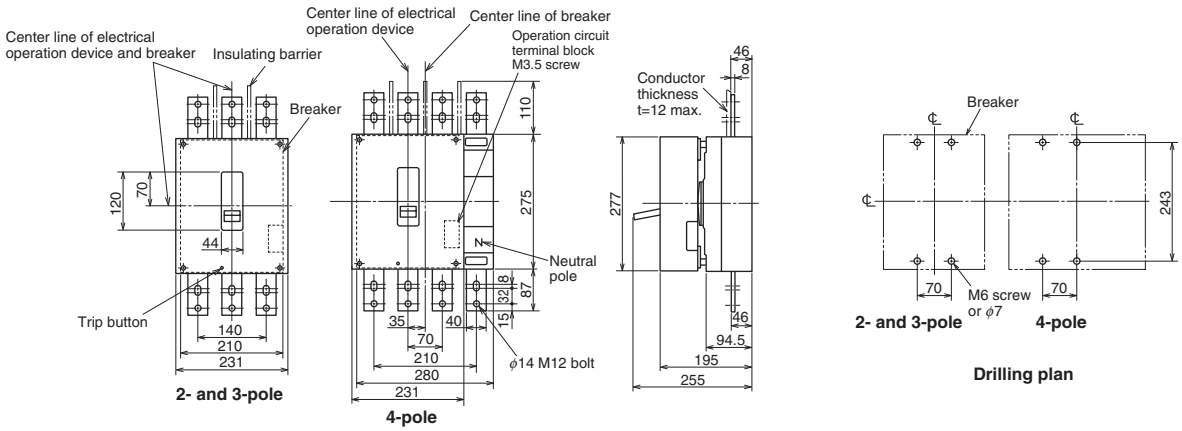


Remark: 1. 2-pole models are 3-pole with the central pole conductor removed.

## NF800-UEW Motor drive type

**Front connection**

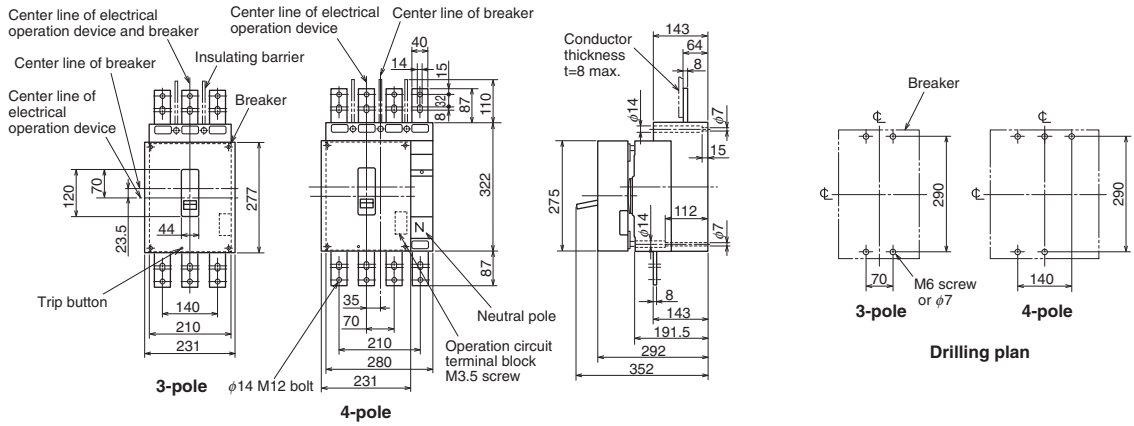


## NV800-SEW, NV800-HEW Motor drive type

**Front connection**

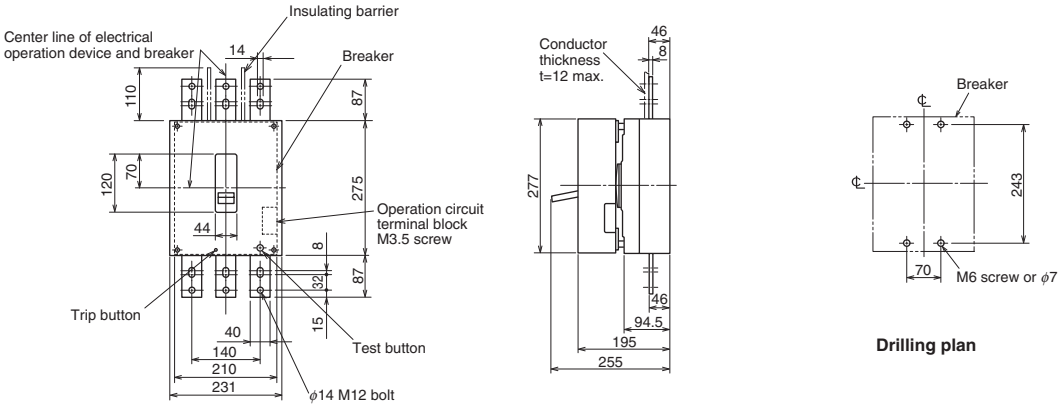

## NF1000-SEW, NF1250-SEW, NF1250-SDW Motor drive type

**Front connection**

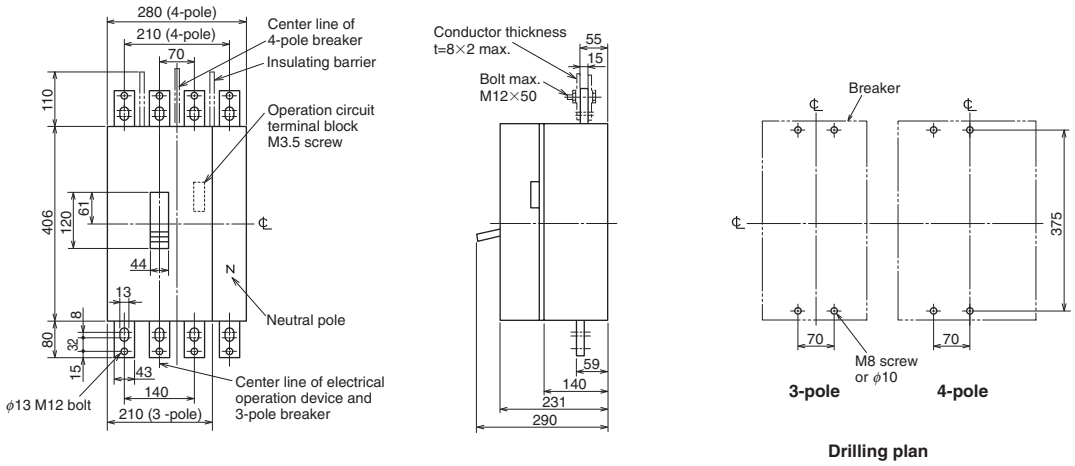


Remark: 1. 2-pole models are 3-pole with the central pole conductor removed.

## NF1600-SEW, NF1600-SDW Motor drive type

**Front connection**

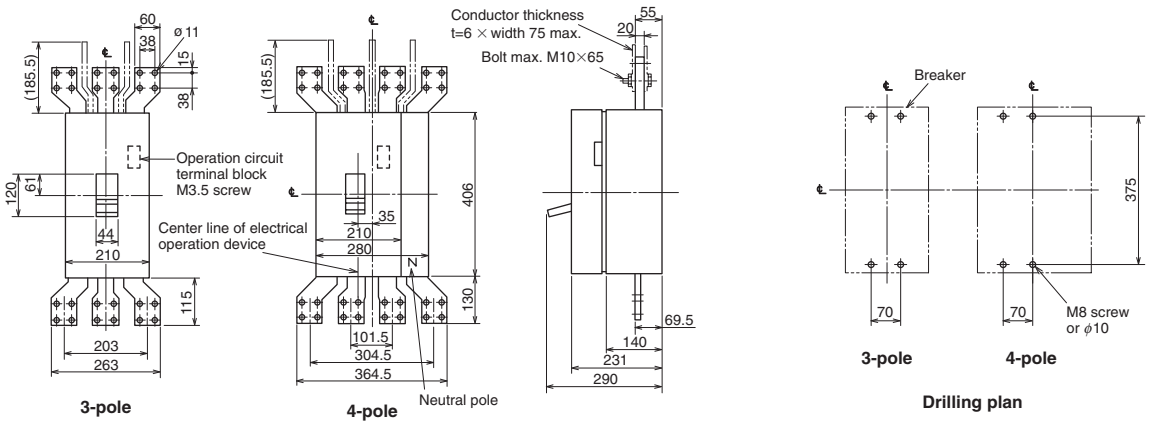

## NF1600-SEW (3-pole) Motor drive type

**Rear connection**

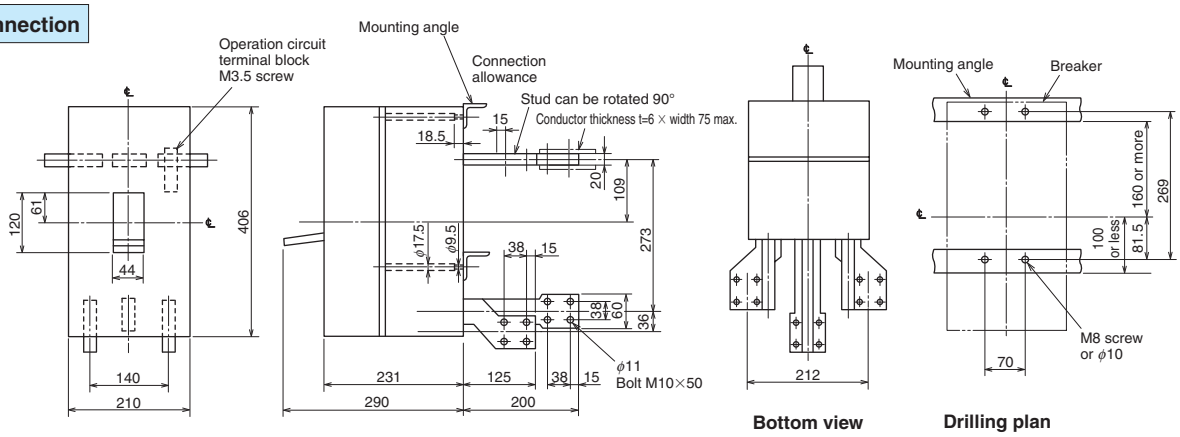


## NF1600-SEW (4-pole) Motor drive type

**Rear connection**

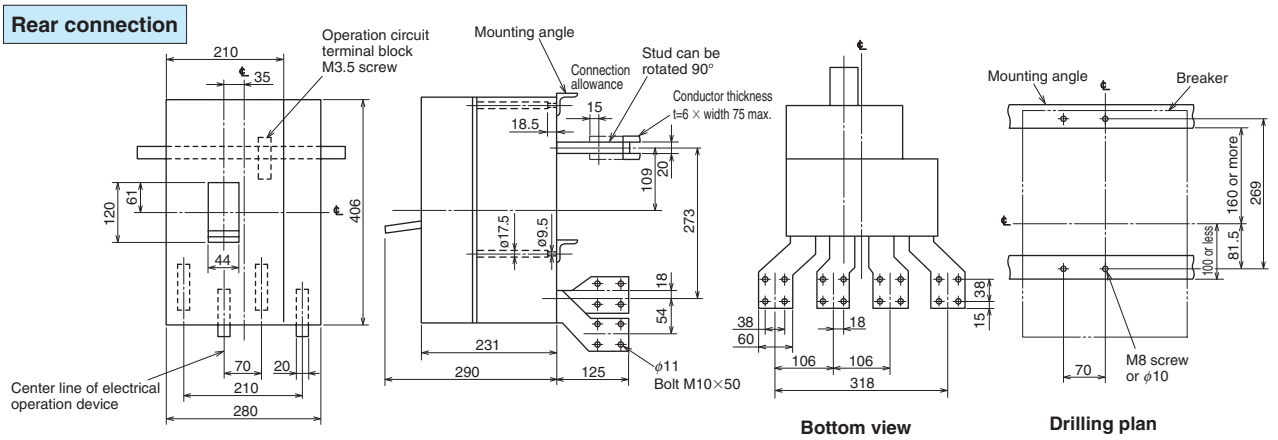


## NF1600-SDW (3-pole) Motor-drive type

**Rear connection**

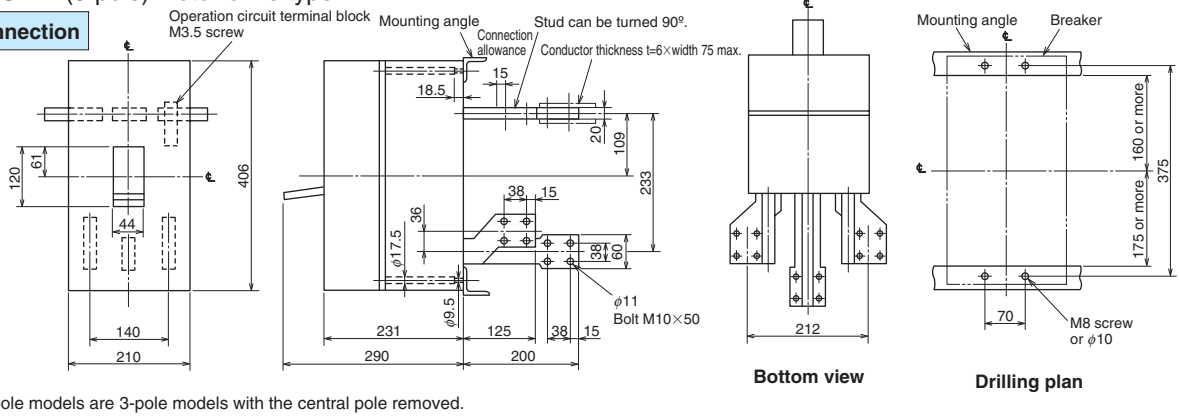


Remark: 2-pole models are 3-pole models with the central pole removed.

## NF1600-SDW (4-pole) Motor-drive type

**Rear connection**

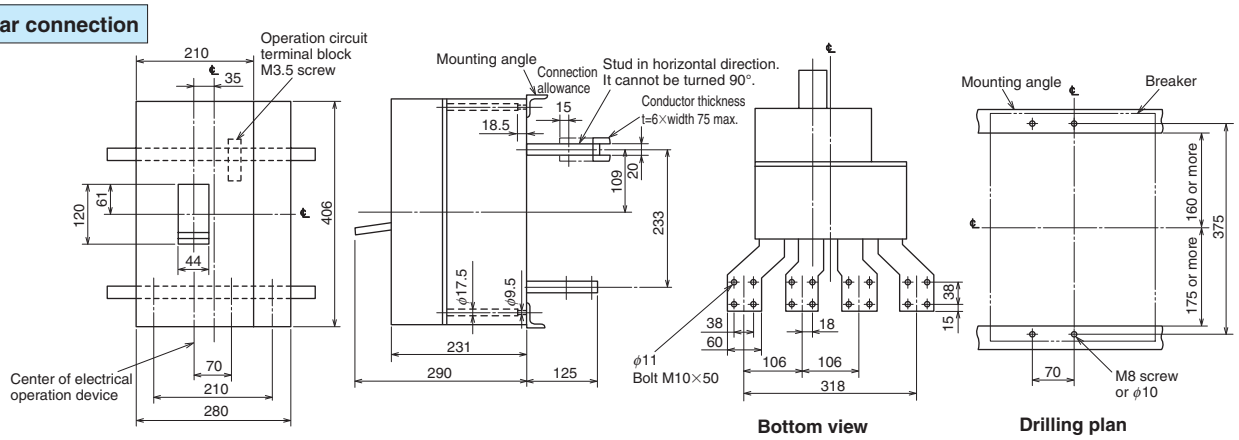

MEMO

7

# 8

# Handling and Maintenance

1) Storage and Transportation ..... 236
2) Standard Working Conditions ..... 236
3) Mounting and Connections ..... 236
4) Maintenance and Inspections ..... 238
5) Troubleshooting ..... 240

# 1. Storage and Transportation

## (1) Precautions for storage

| Avoid corrosive gases | Store in the OFF or tripped state | Avoid moisture |
|---|---|---|
| 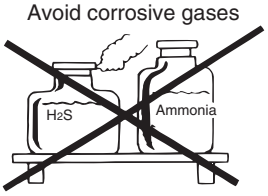  Do not store the product in an atmosphere containing acidic gas or ammonia gas.<br>$H_2S$ 0.01ppm or less $SO_2$ 0.05ppm or less<br>$NH_3$ 0.25ppm or less | 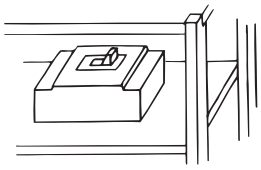 Store the breaker in the OFF state or tripped state. | 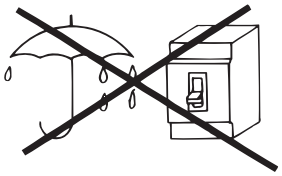 Do not leave the breaker in a humid place for long periods of time. |

## (2) Precautions for transportation

| Carefully pack and transport | Do not carry by holding the front and back of the flush plate | Do not carry by the lead wires | Do not transport upside down (when mounted on IEC 35mm rail) |
|---|---|---|---|
| 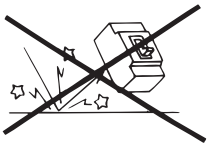 Do not drop the package during transportation. When shipping the breaker, make sure to package it carefully. | 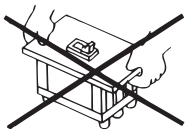 Do not carry the embedded type breaker by holding the front and back of the flush plate. The breaker could drop during transportation. | Do not carry the accessories by the lead wires. Excessive force will be applied on the accessories. | 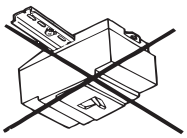 Do not transport a panel containing parts mounted on an IEC 35mm rail in an upside down state. |

# 2. Standard Working Conditions

- Working ambient temperature … -10°C to 40°C
  (Note that the 24-hour average value must not exceed 35°C)
  working current reduction rate in ambient temperature exceeding 40°C.
  50°C… 0.9 fold
  60°C… 0.7 fold
- Relative humidity … 85% or less with no dew condensation.
- Altitude … 2000m or less
- Atmosphere … Free of excessive moisture, oil vapors, smoke, dust, salt, corrosive substances, vibration or impact, etc.

# 3. Mounting and Connections

## (1) Precautions for mounting

| Attention to dust and cutting chips! | Do not block ventilation ports | Avoid direct sunlight | Do not remove the rear cover |
|---|---|---|---|
| 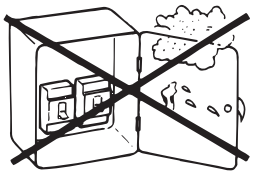 Make sure that the breaker does not come in contact with rain water, oil, dust or cutting chips. Special attention must be taken to conductive materials such as scraps from drilling steel plates. | 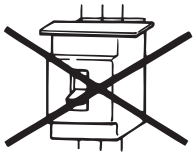 Do not block the ventilation ports. The breaker performance could drop. Ensure the insulation distance for breaker mounting indicated on page 101. | 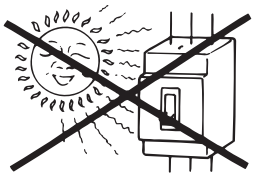 Make sure that the breaker is not subject to direct sunlight during use. An increase in temperature could cause malfunctions. Sunlight could also discolor the nameplate and molded case, etc. | 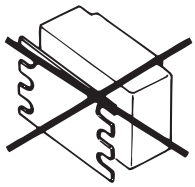 Do not remove the rear cover from the back of the base. |

**Mounting style**

Pay attention to the mounting angle of the following models as the overcurrent tripping characteristics may vary according to the mounting stye. Use in a vertical direction is recommended.

- NF30-CS
- CP30-BA

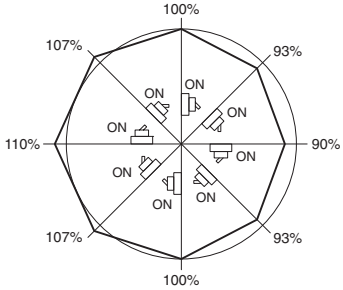


Rate of change of rated current by mounting angle

Do not wipe with thinner, detergent or chemical cloth

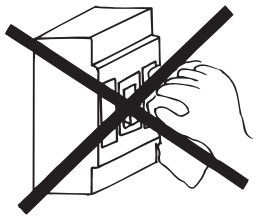

Do not use thinner, etc., to clean the surface of the breaker.
Use compressed air or a dry cloth to clean.

## (2) Precautions for Connections

### Oiling of threads prohibited

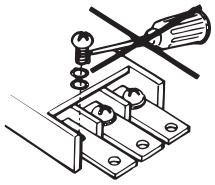

- Do not apply lubricant to the threads. Oil will decrease the friction at threads and cause the screws to loosen easily, and the unit to overheat. Excessive stress will be applied on the threads even with the standard tightening torque and can cause the screws to break.

### Connect conductors parallel to each pole

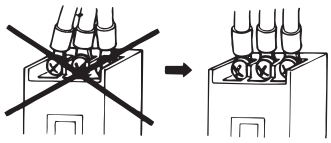

- Connect each connection conductor so it is parallel to each pole.

### Do not deform studs

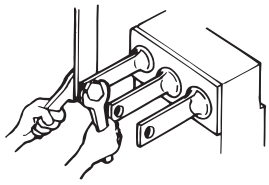

- When connecting the conductors on the rear connection type, take care not to deform the studs when tightening.

### Do not connect in reverse

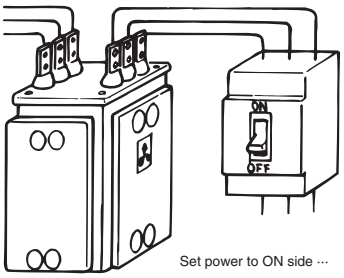


- As a rule, do not connect the power and load in reverse. If necessary, refer to the specifications and select a model which can be connected in reverse.
- An insulating barrier should be provided on both the power and load sides of the breakers when using a high voltage circuit where dew condenses easily or in a circuit which has a reverse connection in the circuit.

### Securely fix conductors

- A large electromagnetic force is applied on the connected conductor according to the accident current. Use the conditions on the right as guide and securely fix (tighten) the conductors.

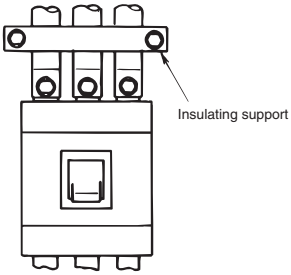


### Electromagnetic force applied per 1m conductor (During 3-phase short-circuit)

| Current target value kA(Pf) | Distance between conductors cm | 10 | 20 |
|---|---|---|---|
| 10 | (0.4) | 490 | 245 |
| 18 | (0.3) | 1860 | 930 |
| 25 | (0.2) | 4410 | 2205 |
| 35 | (0.2) | 8720 | 4360 |
| 42 | (0.2) | 12545 | 6270 |
| 50 | (0.2) | 17835 | 8920 |
| 65 | (0.2) | 30185 | 15090 |
| 85 | (0.2) | 51550 | 25775 |
| 100 | (0.2) | 71540 | 35770 |
| 125 | (0.2) | 111720 | 55860 |

### Bar Connection

- When directly connecting the conductor, refer to the outline drawings and drill the conductor.
- When connecting the conductors to a bar terminal, pay attention to the insulating distance with the ground. A ground fault prevention barrier is available as an option.

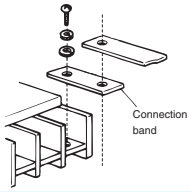


### ELCB (NV) connection

- When using a single-phase 3-wire method, connect the neutral pole to the NC's center pole.

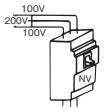


- When using a 3-pole ELCB with a single-phase 2-wire, connect to the left and right poles (poles at both sides) of ELCB.

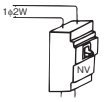


- Never connect the ELCB units in parallel as it will create a loop circuit, and could burn the magnetic device.
- Never connect the MCCB and ELCB in parallel.

### Wire retention type connection

- When directly connecting to the terminal, insert the single strand or stranded wires in straight and then tighten.
  A commercially-available crimp terminal or bar can be connected directly.
- When using stranded wires, split them and then tighten.

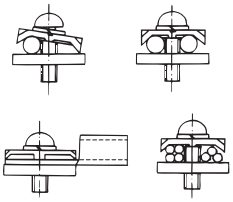

### Solderless terminal connection

- Untwist the connection wires, align the core wires and then tighten.
  The wires will loosen up during use, and must be tightened during periodic maintenance.
- Do not solder or bind the end of the strands.
- Make sure not to catch the insulating sheath of the wire when tightening.

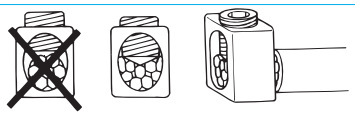

# 4. Maintenance and Inspections

## (1) Initial inspections

After installing the MCCB and ELCB, inspect the following matters before powering the units.

| Model | Inspection items | Criterion | Remarks |
|---|---|---|---|
| Common | 1. Are there any excessive screws, drilling scraps, wire scraps or any other conductive materials around the terminals? | All conductive material must be removed. | |
| | 2. Are there any cracks or damage on the cover or base? | No cracks or breaks allowed. | |
| | 3. Is there any dew condensation on the cover, base or terminals? | No dew condensation allowed. | |
| | 4. Measure the insulation resistance with a 500V insulation resistance tester. | 5MΩ or more | Refer to Precautions ② for the ELCB. |
| | 5. Are the connector connections tightened securely? | Must be specified tightening torque. | |
| ELCB | 6. Are the ELCB rated voltage and circuit voltage the same? | Voltages must be the same. | |
| | 7. Apply voltage, press the test button and check the operation. | Must trip with an earth leak. | |

**Precautions**

①**Withstand voltage test**

A guide for the test is given on the following. Do not perform a withstand voltage test exceeding these levels. (Note) Test the operating circuit between the live section and ground.

(Application time: one minute) (Unit: V)

| Main circuit | | Auxiliary circuit or control circuit | |
|---|---|---|---|
| Rated insulation voltage | Test voltage (effective value for alternating current) | Rated insulation voltage of operating circuit | Test voltage (effective value for alternating current) |
| $U_i \leqq 300$ | 2000 | $U_{is} \leqq 60$ | 1000 |
| $300 < U_i \leqq 690$ | 2500 | $60 < U_{is} \leqq 690$ | $2U_{is}+1000$ (min. 1500) |

②**Insulation resistance measurement and withstand voltage test**

The restrictions a and b apply to the following models.
Applicable models: Earth leakage circuit breaker, Measuring display unit breaker.

| Measurement position \ Test | | | Insulation resistance measurement | | Withstand voltage test | |
|---|---|---|---|---|---|---|
| State of handle | | | ON | OFF | ON | OFF |
| Between live section of main circuit and ground | | | ○ | ○ | ○ | ○ |
| Between different poles | Line side | Between left - middle, middle - right, left - right poles | △ | ○ | × | ○ |
| | | Between left - neutral pole, middle - neutral poles right - neutral poles | (*1) ○ (△) | ○ | (*1) ○ (×) | ○ |
| | Load side | Between left - middle, middle - right, left - right poles | △ | △ | × | × |
| | | Between left - neutral poles, middle - neutral poles right - neutral poles | (*1) ○ (△) | (*1) ○ (△) | (*1) ○ (×) | (*1) ○ (×) |
| Between power - load side terminals | | | – | ○ | – | ○ |
| Between main circuit live sections - operating circuit live sections | | | ○ | ○ | ○ | ○ |
| Between operating circuit live section - ground | | | ○ | ○ | ○ | ○ |

Note *1 Values in parentheses apply for measuring display unit breaker.

## (2) Periodic inspections

To prevent trouble and ensure the breaker operates safely for a long time, inspect the breaker one month after starting use and periodically thereafter according to the environmental conditions.

Inspection Interval Guide

| | | |
|---|---|---|
| 1 | Clean and dry environment | Once every 2 to 3 years |
| 2 | Environment with low levels of dust, corrosive gas, vapors, salt, etc. | Once a year |
| 3 | Places other than 1 or 2 | Once every six months |

| Model | Inspection items | Criterion | Remarks |
|---|---|---|---|
| Common | 1. Are any of the conductors loose? | No conductor must be loose. | If any conductor is loose, tighten again with the appropriate torque given in Tables 5-5 and 5-6 on pages 97 to 98. |
| | 2. Is any cover or base cracked? Is any handle damaged? | There must be no cracks, damage or breaks. | |
| | 3. Has the breaker been submerged and infiltrated with water? Is the breaker heavily dirtied by mud or dust? | There must be no infiltration of water, heavy mud or dust. | If water has infiltrated the breaker, it must be replaced with a new part or overhauled by the Mitsubishi Service Center. |
| | 4. Has the temperature risen abnormally? | (1) Visually inspect that none of the studs on the backs of the terminals, or the breaker's tightened or molded sections are discolored from burning.<br>(2) There must be no especially high temperature rise when the current at each phase is balanced. (Tolerable maximum value for terminal temperature rise: 60K)<br>(3) There should be no difference on the left and right side of the base sides if the load current is balanced. | There may be a light temperature difference between the following terminals.<br>● Between the power side terminal and load side terminal<br>● Between the center pole terminal and left and right pole terminals. |
| | 5. Can the handle be turned ON and OFF smoothly? | Should operate smoothly. | Open and close a normally closed breaker periodically. This will clean the contact and prevent abnormal heating. |
| | 6. Does pressing the TRIP button result in a trip? | Must be resettable after tripping. | |
| NV | 7. Test by pressing the TEST button. | Must operate properly and close again. | Test the operation once a month. |

## (3) Inspection after Tripping

Whether the circuit breaker can be reused or must be replaced after switching off a fault current depends on the intensity of the current which was switched off.

Intensity of trip current, degree of MCCB and ELCB damage, and countermeasures

| Intensity of trip current | Degree of MCCB and ELCB damage | Countermeasures |
|---|---|---|
| When it is clear that the circuit breaker operated within the time-delay trip range (Overcurrent up to 10 times of rated current) | No abnormality such as contamination around vent observed | Reusable (The circuit breaker can function 50 times (100A or less) at overload current which is 6 times higher than rated current) |
| Relatively low short-circuit current which causes instantaneous tripping ↕ Large short-circuit current close to rated breaking capacity | Soot and dust found near vent ↕ Soot and dust found near handle, remarkable contamination found near vent Molten metal found in circuit breaker Box of box type circuit breaker is severely deformed | Reusable ↕ Replace with a new part |

If the intensity of the fault current cannot be estimated, remove the MCCB and ELCB, and measure the insulation resistance. If the specified value (5MΩ) has not been reached, perform a withstand voltage test. If the withstand voltage is within the specified value, the circuit breaker can be used temporarily but it should be replaced with a new part as soon as possible. If both the insulation resistance and withstand voltage are sufficient, the circuit breaker may be judged as reusable. However, it should be checked for abnormalities, such as an abnormal rise in temperature for a set period.

- Measure the insulation resistance and perform the withstand voltage test with the procedures given in section 1 and 2 on page 238.
- Check that the ELCB operates when the test button is pressed.

## (4) Guide to service life

Maintenance and inspection must be conducted according to the environment in which the circuit breaker is installed.
The service life of the circuit breaker cannot be determined just by the number of service years.
A reference to the service life is given below, but the circuit breaker must be diagnosed by a specialist for an accurate reading.

Guide to service life

| Degree | | Environment | Example | Guide for replacement (years) |
|---|---|---|---|---|
| Standard usage state | 1 | Place where air is always clean and dry | Dust-proof and air-conditioned electrical room | Approx. 10 to 20 |
| | 2 | Indoors, where there is little dust and no corrosive gas | Circuit-breakers housed in distribution panels or boxes within an individual electric room having no dust-proofing or air-conditioning | Approx. 7 to 15 |
| Poor environment | 1 | Place with gases such as sulfuric acid, hydrogen sulfide, salt and high levels of moisture, but low levels of dust | Geothermal power house, sewage treatment plans, iron and steel works, paper and pulp plants, etc. | Approx. 3 to 7 |
| | 2 | Place with high levels of gas and dust which humans cannot endure for long periods of time | Chemical plants, quarries, mines, etc. | Approx. 1 to 3 |

| Standard | Size of circuit breaker frame (A) | Number of operating cycles (times) | | | Number of tripping times by shunt tripping device or undervoltage tripping device, or by trip button |
|---|---|---|---|---|---|
| | | Energization | No energization | Total | |
| JIS C 8201-2-1 Ann.2 JIS C 8201-2-2 Ann.2 JIS C 8201-2-1 Ann.1 JIS C 8201-2-2 Ann.1 IEC 60947-2 (*1) | 100 or less | 1500 | 8500 | 10000 | 10% of total operating cycles |
| | More than 100, 315 or less | 1000 | 7000 | 8000 | |
| | More than 315, 630 or less | 1000 | 4000 | 5000 | |
| | More than 630, 2500 or less | 500 | 2500 | 3000 | |
| | More than 2500 | 500 | 1500 | 2000 | |

Note *1 The number of trips by the ELCB test button is one-third the number of energizations.

The operating life shortens as the circuit breaker frame size increases. (Refer to above tables.)
These values may seem low, but since this circuit breaker is a protective device, it basically differs from a switch intended for frequent opening and closing.
For tripping by a shunt tripping device, the life is especially short and special consideration should be taken.

**⚠ WARNING** Continuing user of a circuit breaker which has reached its service life can result in the following problems. Always update the circuit breakers accordingly.

① Insulation fault: Risk of burning, internal short-circuit, and electric shock.
② Energizing fault: Burning or unnecessary operations caused by overheating of the internal parts, etc.
③ Operation fault: ON and OFF operation of the circuit may be disabled.
④ Tripping fault: Protection of the load device or wiring, etc., may be disabled.

**⚠ CAUTION** When the operating endurance exceeds the specified value, the above faults could occur or the internal conductor could break, overheat or burn.

# 5. Troubleshooting

## (1) Troubleshooting for breaker unit (MCCB, ELCB)

| Fault state | | | Cause | | Countermeasures and Actions |
|---|---|---|---|---|---|
| Operation errors | Can't close | | Foreign matter in switching mechanism | | Remove the foreign matter |
| | | | Breaker hasn't been reset | | Reset again |
| | | | Breaker can't be reset | See below(*) | See below |
| | (*)<br>Can't reset<br>Can't trip<br>Can't turn OFF | | Wear due to tripping endurance | Excessive use of shunt trip operation | Replace with new part. Change shunt trip to electric operation |
| | | | | End of service life | Replace with new part |
| | | | Reset mechanism is faulty | Improper adjustment | Return for repairs |
| | | | Undervoltage coil is not excited | Careless operation | Excite the coil |
| | | | Resetting time has not elapsed | | Wait for bimetal to cool down |
| | | | Switching spring is broken or fatigued | Breakage caused by initial trouble | Return for repairs |
| | | | | End of service life | Replace with new part |
| | | | Contact has fused because of excessive interruptive current | | Replace with large capacity breaker |
| | | | Insufficient lubricant (grease) | | Return for repairs |
| Broken handle | | | Excessive power during operation | | Replace handle |
| | | | Positional relation of external operation handle and breaker is poor | | Replace handle |
| | | | | | Correct positional relation |
| Poor energizing | | | Foreign matter caught between contacts | | Remove foreign matter (if cover is removable) |
| | | | | | Return for repairs (if cover is not removable) |
| | | | Fusion at conductive section | Excessive interrupting current | Replace with new part having large interruptive capacity |
| | | | Excessive wear of contacts | Short-circuit current cut off End of service life | Replace with new part |
| Broken rated changeover screw | | | Excessive tightening torque (Tighten with 0.3 to 0.45N·m) | | Return for repairs |
| Annoying operation | Operates under normal load | | Ambient temperature is high | Incorrect selection (temperature compensation) | Change the selection |
| | | | | Panel is sealed | Ventilate |
| | | | Excessive temperature rise | Loosening at terminal connections | Tighten |
| | | | Applied frequency is incorrect (thermal-adjustable electromagnetic type NV1000A, NV2000A frame or more) | Incorrect selection (frequency) | Replace with breaker having suitable frequency |
| | | | Load current contains high levels of high-frequency distortion | | Insert a reactor and decrease distortion factor |
| | | | Measuring instrument is reading small measurement values because of distorted current | | Correctly specify the rated values by using real meters with effective value |
| | | Electronic type: Overcurrent indicator LED is ON | Rated current setting value is too low | | Correct the rated current setting |
| | | | Rated current changeover screw was not tightened | | Correctly tighten the rated current changeover screw Tightening torque 0.3 to 0.45N·m |
| | | | Failure of rated current changeover section | | Return for repairs |
| | Malfunctions when starting | | Heating caused by repeated starting current | Incorrect selection | Replace with breaker having higher rating |
| | | | Long starting time | Incorrect selection | Replace with breaker having higher rating |
| | Momentarily functions when starting | | Starting current is too high | | Change the instantaneous setting or replace with breaker having higher rating |
| | | | Starting rush current is too high | | Change the instantaneous setting or replace with breaker having higher rating |
| | | | Excessive current during delta-star starting changeover<br>Excessive current due to reversible operation | | Change the instantaneous setting or replace with breaker having higher rating |
| | | | Rush current during instantaneous restart | | Change the instantaneous setting or replace with breaker having higher rating |
| | | | Rare short-circuit of motor | | Repair the motor |
| | | | Bimetal reset incomplete after instantaneous tripping | | Allow to properly reset |
| | | | Abnormal current passed simultaneously with closing (short-circuit closing) | | Inspect the circuit and remove the cause |
| | Operates during use | | Antenna for transceiver (5W or higher) was seated against electronic type MCCB body during transmission | | Use the transformer at least 1m away from the electronic type MCCB |
| Short-circuit on power side | | | Dust is accumulated | | Remove the cause or replace with new part |
| | | | Conductive matter has dropped into power side | | Remove the cause or replace with new part |
| Temperature rise | Terminal temperature is high | | Improper tightening | Improper maintenance | Tighten |
| | Mold side temperature is high | | Complete electromagnetic type being used at a high frequency (400Hz, etc.) | | Replace with breaker having suitable frequency |
| | | | Load current contains high levels of high-frequency distortion | | Insert a reactor and decrease distortion factor |
| | | | Incorrect measurement resulting from touch | | Measure with a measuring instrument |
| | Heating at stud tightening section | | Studs are loose | | Tighten |
| | | | Contact fault between stud conductor and body terminal | | Reassemble the stud |
| | | | Groove to reduce overcurrent heating not grooved on rear connection type's steel mounting plate (400A frame and larger) | | Machine grooves to reduce overcurrent heating |
| No operation | No tripping at overcurrent | | Selected rated current is too high | | Replace with a breaker having a lower current |
| | | | Applied frequency is incorrect | | Replace with breaker having suitable frequency |
| | | | Backup breaker has tripped | Backup breaker's instantaneous tripping current is too low | Lower the instantaneous electromagnetic setting<br>Raise the electromagnetic setting for the backup breaker, or change the rating |
| Does not operate with tester (electronic type MCCB) | Overcurrent indication LED does not turn ON, or turns ON and then OFF before specified time | | Breaker tester's battery is spent | | Replace the breaker tester's battery |
| | Overcurrent indication LED turns ON and then OFF after specified time, but does not trip | | Tripping mechanism is faulty | | Return for repairs |

## (2) Troubleshooting for leakage operation section

| Fault state | | Cause | Countermeasures and Actions |
|---|---|---|---|
| Annoying operation | Operates simultaneously with closing (The leakage mechanism operates, such as the leakage indication button pops out) | The wiring is long creating a large ground electrostatic capacity, and causes a leakage current flow | Change the rated sensitivity current or install the ELCB near the load |
| | | ELCB units are being used in parallel, or is incorrectly connected with a neutral wire, etc. | Use the correct wiring |
| | Operates during use | An excessive surge, such as inducted lightning, has infiltrated the unit | Install a surge absorber, etc., near the circuit |
| | | Induction noise from a nearby large current bus, etc., has infiltrated the unit | Avoid sources of noise |
| Operation errors | Leakage operation occurs when the test button is pressed, etc., but there is not indication | LED is faulty or is at end of service life | Replace with new part |
| | | The indicator button is improperly adjusted and does not protrude | Return for repairs |
| No operation | No operation takes place when the test button is pressed | Electronic circuit section is faulty | Replace with new part |
| | | Voltage is not applied | Apply the specified voltage |
| | | Contact continuity is faulty | Remove the foreign matter from the contact |

Remarks: 1. When using a transceiver, use at least 1m away from the electronic MCCB and ELCB.

## (3) Troubleshooting for accessories

| Fault state | | Cause | | Countermeasures and Actions |
|---|---|---|---|---|
| NFM<br>NVM<br>(Electric operation device) | Operation disabled | Operation power voltage has dropped | Operation circuit wire capacity is insufficient | Use a larger operation circuit wire |
| | | | Operation power capacity is insufficient | Improve the operation power |
| | | Resistor or motor is burned | Excessive continuous operation | Return for repairs (motor replacement) |
| | | Connection is incorrect | | Use the correct wiring |
| | | Applied voltage is incorrect | | Apply the correct operation voltage |
| | Continuous idling | ON and OFF circuits are operating simultaneously, operation is mistaken | | Provide an interlock at the pushbutton |
| | | For the self-holding type, the auxiliary switch contact is used for automatic reset | | Use the alarm switch contact for the automatic reset contact |
| | One idle run when closing | Voltage ripping in the OFF state, or tripping caused by undervoltage | | Turn OFF once to reset, and then turn ON again |
| | | Breaker itself has automatically cut-off and tripped | | |
| UVT<br>(Undervoltage tripping device) | Closing disabled | Applied frequency or voltage is incorrect | | Improve the power |
| | | Doesn't attract | voltage drop is large | Improve the voltage |
| | Doesn't trip even when voltage is absent | Breaker's tripping mechanism is faulty | | Return for repairs |
| SHT<br>(Shunt tripping device) | Doesn't trip | Insufficient voltage | Operation voltage has dropped | Improve the power |
| | | | Applied voltage is incorrect | Improve the power |
| | | Coil is burnt | Coil is continuously excited | Return for repairs (coil replacement, installation of burn prevention auxiliary coil) |
| | | | Operation voltage has dropped causing continuous excitation | Return for repairs (coil replacement), improve power |
| | | | Burn preventing auxiliary contact is faulty | Return for repairs (coil replacement, contact repair) |
| | | | Abnormal voltage is applied | Return for repairs (coil replacement) |
| AL (Alarm switch)<br>AX (Auxiliary switch)<br>EAL (Earth leakage alarm contact)<br>TBM (Test button module)<br>PAL (Pre-alarm) | Malfunction | Contact fault caused by overcurrent | | Return for repairs |
| | | Incorrect connection | Connection mistaken during installation | Refer to nameplate and correct the wiring |
| | | Microload | Incorrect selection | Return for repairs (replacement with type for microloads) |
| | | Loose mounting screws | Insufficient tightening<br>Vibration during transportation | Return for repairs (readjustment) |

## (4) Cases of unnecessary ELCB operation

Even if the ELCB is not faulty, there may be a problem in the circuit which causes frequent operation or instantaneous operation at closing. Refer to the following section and incorporate it as part of the circuit inspection and troubleshooting.

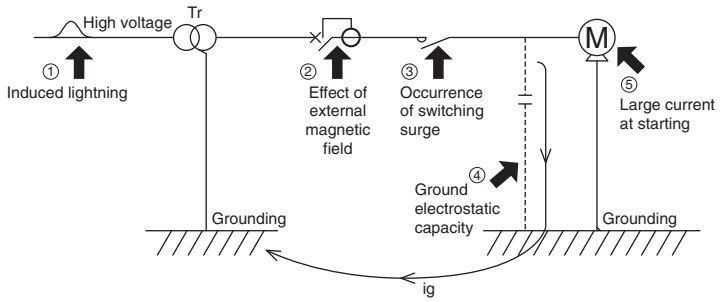


The following five conditions are the most conceivable causes of trips in cases such as when the breaker trips immediately after the ELCB is closed, or when the breaker trips suddenly during use but inspection of circuit shows no ground fault accidents. Check each item and if any problems are found, correct them accordingly.

| Cause | Countermeasures |
|---|---|
| 1 Induction lightning | All models incorporate a non-operating shock structure and should sufficiently withstand 7kV (JIS Standards), so unnecessary operation should not occur. |
| 2 External magnetic field | The ZCT is equipped with a magnetic shield, and is not affected easily. However, the breaker could operate if there are large current buses reaching several thousand amperes near the ELCB, or if there is a short-circuit fault in nearby circuit. Separate the ELCB from the large current bus wires by at least 10cm. |
| 3 Switching surge | All models incorporate a non-operating shock structure and should not operate unnecessarily. However if there is a time lag in the closing time of each pole in the magnetic switch, unnecessary operation could occur due to the relation of the ground electrostatic capacity. |
| 4 Effect of ground electrostatic capacity | If the wires are stored in a metal conduit or metal duct wiring, the ground electrostatic capacity will increase compared to other wiring methods. This may cause the leakage current to constantly increase. If the magnetic switch chatters, etc., the leakage current may become temporarily unbalanced thus reaching a leakage current equivalent to the sensitivity current and causing unnecessary operation.<br>Review the following matters in this case.<br>1) Shorten the load circuit line, or install the ELCB near the load (device) being used. (Install in a branch circuit.)<br>2) Lead the control circuit for the control device, etc., from the power on the ELCB side.<br>3) If the above measures are difficult or if they cause further unnecessary operation, reconsider the selected ELCB rated sensitivity current. |
| 5 Equilibrium properties caused by large current at starting | The ZCT is made of high-grade permalloy, a material with Ni as its main element and which has outstanding residual magnetic characteristics. The periphery of the ZCT is covered with material having outstanding magnetic characteristics, creating a complete magnetic shield. This suppresses the effect of residual currents to the minimum, and prevents the breaker from unnecessarily operating even near a current of several thousand amperes.<br>In the relay, the characteristics change if the primary conductor is bent immediately after it is passed through the ZCT. Thus, when passing a primary conductor with current of 300A or more through the ZCT, keep the conductor straight for at least 30cm on either side. |

# 9

# Appendix


1) Handle Operation Angle Dimensions ..... 244
2) MCCB Trip Button, Instantaneous Adjustment Dial Drilling and Terminal Cover Mounting Hole Dimensions ..... 245
3) ELCB Button and Switch Dimensions ..... 246
4) List of Product Weights ..... 247
5) Switching the Adjustable Items ..... 248
6) Breaker Mounting Screw Dimensions ..... 251
7) List of Mold Surface Temperature-rise Values ..... 252
8) Ordering Information ..... 253
9) Melshort 2 ..... 255
10) Low-Voltage Products Website ..... 256

# 1. Handle Operation Angle Dimensions

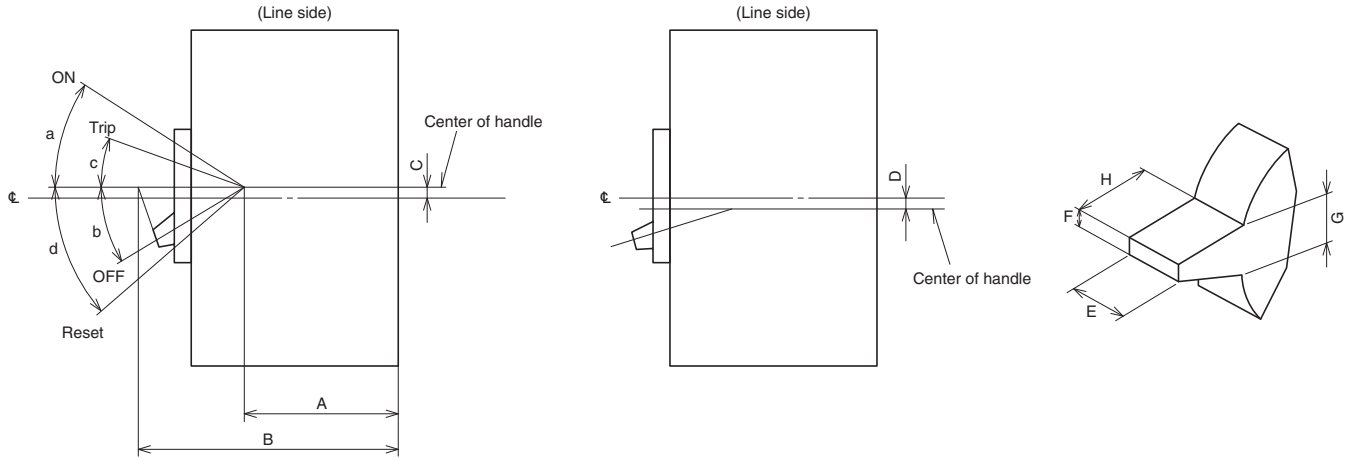


**Table of dimension variations**

| Class | Model | | Operation angle (° ) | | | | Dimensions (mm) | | | | | | | |
|---|---|---|---|---|---|---|---|---|---|---|---|---|---|---|
| | | | ON | OFF | Trip | Reset | | | | | | | | |
| | MCCB, MCB | ELCB, RCCB, RCBO | a | b | c | d | A | B | C | D | E | F | G | H |
| C • S • H | NF50-SVFU | NV50-SVFU | 12 | 20 | 4 | 27 | 55 | 90 | 13 | – | 8 | 5 | 5 | 14 |
| | NF32-SV<br>NF63-CV, NF63-SV, NF63-HV<br>NF125-CV, NF125-SV, NF125-HV<br>NF100-CVFU, NF125-SVU, NF125-HVU | NV32-SV<br>NV63-CV, NV63-SV, NV63-HV<br>NV125-CV, NV125-SV, NV125-HV<br>NV100-CVFU, NV125-SVU, NV125-HVU | 15 | 19 | 5 | 21 | 40 | 90 | 2 | – | 12 | 7 | 7 | 17 |
| | NF125-SEV, NF125-HEV<br>NF250-CV, NF250-SV, NF250-HV<br>NF250-SEV, NF250-HEV<br>NF250-SGV, NF250-LGV, NF250-HGV<br>NF125-SGV, NF125-LGV, NF125-HGV<br>NF160-SGV, NF160-LGV, NF160-HGV<br>NF250-SVU, NF250-HVU | NV125-SEV, NV125-HEV<br>NV250-CV, NV250-SV, NV250-HV<br>NV250-SVU, NV250-HVU | 15 | 19 | 5 | 21 | 40 | 92 | 2 | – | 12 | 7 | 7 | 19 |
| | NF30-CS | – | 21 | 29 | 1 | 31 | 47 | 67 | 10 | – | 8.5 | 4.5 | 6 | 13 |
| | NF225-CWU | – | 12 | 18 | 2 | 21.5 | 38 | 92 | 7.5 | – | 13.5 | 7 | 8 | 18.5 |
| | NF400-CW | NV400-CW | 16.5 | 10 | 6.5 | 14.5 | 49 | 134 | 6.5 | – | 32.5 | 14.5 | 15.5 | 25 |
| | NF400-SW/SEW/HEW/REW<br>NF630-CW/SW/SEW/HEW/REW<br>NF-SKW | NV400-SW/SEW/HEW/REW<br>NV630-CW/SW/SEW/HEW<br>NV-SKW | 16.5 | 10 | 6.5 | 14.5 | 49 | 155 | 6.5 | – | 32.5 | 13.5 | 15.5 | 46 |
| | NF800-CEW/SDW/SEW/HEW/REW<br>NF-SLW | NV800-SEW/HEW | 16.5 | 10 | 6.5 | 14.5 | 49 | 155 | 6.5 | – | 32.5 | 13.5 | 15.5 | 46 |
| | NF1000-SEW, NF1250-SEW<br>NF1600-SEW | – | 18 | 12 | 6 | 17 | 84 | 190 | – | 4 | 41.5 | 13.5 | 15 | 36.5 |
| R • U | NF125-RGV, NF250-RGV | – | 15 | 19 | 5 | 21 | 40 | 92 | 2 | – | 12 | 7 | 7 | 19 |
| | NF125-UV | – | 15 | 19 | 5 | 21 | 40 | 92 | – | 29 | 12 | 7 | 7 | 17 |
| | NF250-UV | – | 15 | 19 | 5 | 21 | 40 | 92 | – | 35 | 12 | 7 | 7 | 19 |
| | NF400-UEW | – | 16.5 | 10 | 6.5 | 14.5 | 146 | 252 | – | 13.5 | 32.5 | 13.5 | 15.5 | 46 |
| | NF400-UEW(4P), NF800-UEW | – | 16.5 | 10 | 6.5 | 14.5 | 146 | 252 | – | 17 | 32.5 | 13.5 | 15.5 | 46 |
| BH | BH | – | 19 | 18 | 5 | 21 | 56 | 77.5 | 5 | – | 9.5 | 9.5 | 9.5 | 13 |
| | BH-P | – | 19 | 18 | 5 | 21 | 57.5 | 79 | 12 | – | 9.5 | 9.5 | 9.5 | 13 |
| | BH-S | – | 19 | 18 | 5 | 21 | 56 | 76.5 | 5 | – | 34.5 | 8 | 9.5 | 12 |
| | BH-PS | – | 19 | 18 | 5 | 21 | 57.5 | 78 | 12 | – | 34.5 | 8 | 9.5 | 12 |
| | BH-D6, BH-D10*1 | – | 41 | 36 | – | – | 63 | 76 | 9 | – | – | – | – | – |
| | BH-DN*1 | – | 42 | 48 | – | – | 63 | 76 | 10 | – | 17 | 4 | 9.5 | 12 |
| | KB-D*1 | – | 41 | 48 | – | – | 63 | 76 | 9 | – | – | – | – | – |
| | – | BV-D*1 | 42 | 40 | – | – | 61 | 76 | 10 | – | 14 | 4 | – | – |
| | – | BV-DN*1 | 42 | 48 | – | – | 63 | 76 | 10 | – | 17 | 4 | – | – |

Note *1 Trip is the same as the OFF position. Resetting is not required.

# 2. MCCB Trip Button, Instantaneous Adjustment Dial Drilling and Terminal Cover Mounting Hole Dimensions

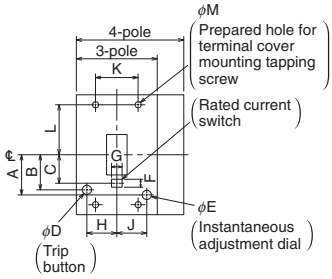


Fig. a

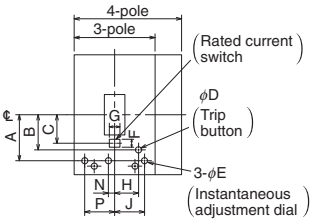


Fig. b

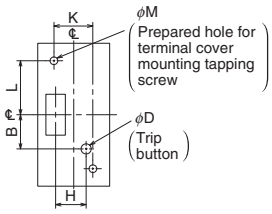


Fig. c

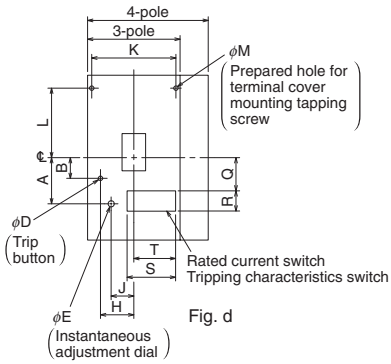


Fig. d

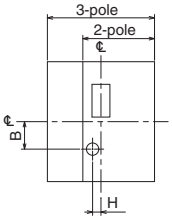


Fig. e

## Table of dimension variations

(mm)

| Model | Number of poles | Fig. | A | B | C | ϕD | ϕE | F | G | H | J | K | L | ϕM | N | P | Q | R | S | T |
|---|---|---|---|---|---|---|---|---|---|---|---|---|---|---|---|---|---|---|---|---|
| NF50-SVFU | 2, 3 | e | – | 14 | – | 6.5 | – | – | – | 4 | – | – | – | – | – | – | – | – | – | – |
| NF32-SV, NF63-CV | 2 | c | – | 20 | – | 6.5 | – | – | – | 21 | – | – | – | – | – | – | – | – | – | – |
| NF63-SV, NF63-HV | 3, 4 | a | – | 20 | – | 6.5 | – | – | – | 29 | – | – | – | – | – | – | – | – | – | – |
| NF125-CV, NF125-SV, NF125-HV | 2 | c | – | 20 | – | 6.5 | – | – | – | 21 | – | – | – | – | – | – | – | – | – | – |
| NF100-CVFU, NF125-SVU, NF125-HVU | 3, 4 | a | – | 20 | – | 6.5 | – | – | – | 37 | – | – | – | – | – | – | – | – | – | – |
| NF125-UV | 2, 3, 4 | a | – | 20 | – | 6.5 | – | – | – | 37 | – | – | – | – | – | – | – | – | – | – |
| NF125-SEV, NF125-HEV, NF250-SV, NF250-HV<br>NF125-SGV, NF125-LGV, NF125-HGV<br>NF160-SGV, NF160-LGV, NF160-HGV<br>NF250-SGV, NF250-LGV, NF250-HGV<br>NF250-SVU, NF250-HVU, NF250-UV | 2, 3, 4 | a | – | 20 | – | 6.5 | – | – | – | 44 | – | – | – | – | – | – | – | – | – | – |
| NF250-SEV, NF250-HEV | 3, 4 | a | – | 20 | – | 6.5 | – | – | – | 44 | – | – | – | – | – | – | – | – | – | – |
| NF125-RGV | 2, 3 | a | – | 20 | – | 6.5 | – | – | – | 44 | – | – | – | – | – | – | – | – | – | – |
| NF250-RGV | 2, 3 | a | – | 20 | – | 6.5 | – | – | – | 44 | – | – | – | – | – | – | – | – | – | – |
| NF30-CS | 2 | b | – | 14.5 | – | 4 | – | – | – | 16 | – | – | – | – | – | – | – | – | – | – |
| | 3 | | – | 14.5 | – | 4 | – | – | – | 27.5 | – | – | – | – | – | – | – | – | – | – |
| NF225-CWU | 2, 3 | a | – | 15.5 | – | 6.5 | – | – | – | 43 | – | – | – | – | – | – | – | – | – | – |
| NF400-CW | 2, 3 | d | – | 30.5 | – | 6.5 | – | – | – | 51.5 | – | 125 | 110.5 | 3.5 | – | – | – | – | – | – |
| NF400-SW, NF-SKW | 2, 3 | d | – | 30.5 | – | 6.5 | – | – | – | 51.5 | – | 125 | 110.5 | 3.5 | – | – | – | – | – | – |
| | 4 | | – | 30.5 | – | 6.5 | – | – | – | 51.5 | – | 125 | 110.5 | 3.5 | – | – | – | – | – | – |
| NF400-SEW, NF400-HEW, NF400-REW | 3 | d | – | 30.5 | – | 6.5 | – | – | – | 51.5 | – | 125 | 110.5 | 3.5 | – | – | 53 | 30 | 74 | 63.5 |
| | 4 | | – | 30.5 | – | 6.5 | – | – | – | 51.5 | – | 125 | 110.5 | 3.5 | – | – | 53 | 30 | 74 | 63.5 |
| NF400-UEW | 3 | d | – | 50.5 | – | 6.5 | – | – | – | 51.5 | – | 125 | 130.5 | 3.5 | – | – | 53 | 30 | 74 | 63.5 |
| | 4 | | – | 54 | – | 6.5 | – | – | – | 78.5 | – | 156 | 152 | 3.5 | – | – | 76.5 | 30 | 74 | 98.5 |
| NF630-CW | 2, 3 | d | – | 30.5 | – | 6.5 | – | – | – | 51.5 | – | 125 | 110.5 | 3.5 | – | – | – | – | – | – |
| NF630-SW | 2, 3 | d | – | 30.5 | – | 6.5 | – | – | – | 51.5 | – | 125 | 110.5 | 3.5 | – | – | – | – | – | – |
| | 4 | | – | 30.5 | – | 6.5 | – | – | – | 51.5 | – | 125 | 110.5 | 3.5 | – | – | – | – | – | – |
| NF630-SEW, NF630-HEW, NF630-REW | 3 | d | – | 30.5 | – | 6.5 | – | – | – | 51.5 | – | 125 | 110.5 | 3.5 | – | – | 53 | 30 | 74 | 98.5 |
| | 4 | | – | 30.5 | – | 6.5 | – | – | – | 51.5 | – | 125 | 110.5 | 3.5 | – | – | 53 | 30 | 74 | 98.5 |
| NF800-CEW, NF800-SEW, NF800-HEW, NF800-REW | 3 | d | – | 30.5 | – | 6.5 | – | – | – | 78.5 | – | 86 | 128.5 | 3.4 | – | – | 53 | 30 | 74 | 98.5 |
| | 4 | | – | 30.5 | – | 6.5 | – | – | – | 78.5 | – | 156 | 128.5 | 3.4 | – | – | 53 | 30 | 74 | 98.5 |
| NF800-SDW, NF-SLW | 2, 3 | d | 74 | 30.5 | – | 6.5 | 10 | – | – | 78.5 | 57 | 86 | 128.5 | 3.4 | – | – | – | – | – | – |
| | 4 | | 74 | 30.5 | – | 6.5 | 10 | – | – | 78.5 | 57 | 156 | 128.5 | 3.4 | – | – | – | – | – | – |
| NF800-UEW | 3 | d | – | 54 | – | 6.5 | – | – | – | 78.5 | – | 86 | 152 | 3.4 | – | – | 76.5 | 30 | 74 | 98.5 |
| | 4 | | – | 54 | – | 6.5 | – | – | – | 78.5 | – | 156 | 152 | 3.4 | – | – | 76.5 | 30 | 74 | 98.5 |
| NF1000-SEW, NF1250-SEW | 3 | d | – | 70 | – | 6 | – | – | – | 56.5 | – | 199 | 178.5 | 3.4 | – | – | 130 | 30 | 74 | 89 |
| NF1600-SEW | 4 | | – | 70 | – | 6 | – | – | – | 56.5 | – | 269 | 178.5 | 3.4 | – | – | 130 | 30 | 74 | 89 |

Remarks:
1. The 4-pole part is available for the S and H Series 50A frame to 1600A frame (excluding NF400-REW, NF630-REW and NF800-REW).
2. The 2-pole part for NF250-CV and larger is the same as the 3-pole part. (Including NF125-HV.)
3. The terminal cover mounting hole shows the case for the screwed type. The breaker mounting hole is used to mount the one-touch terminal cover. Refer to the respective dimension drawings.
4. The K dimensions are divided down the breaker center.

# 3. ELCB Button and Switch Dimensions

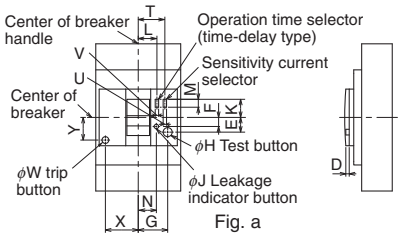

Fig. a

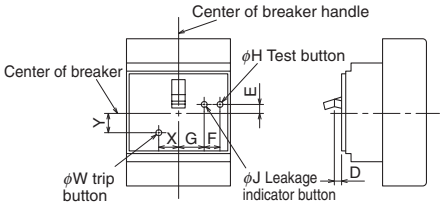

Fig. b

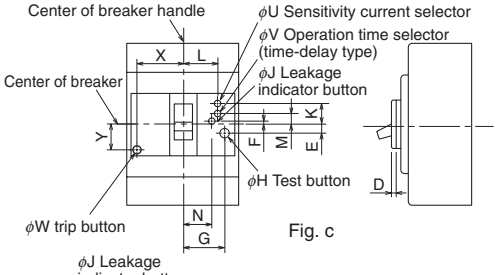

Fig. c

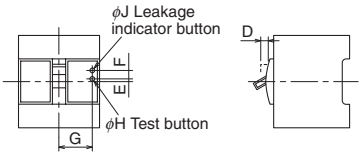

Fig. d

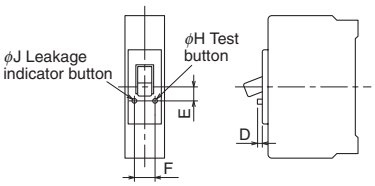

Fig. e

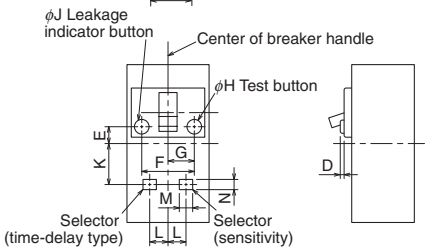

Fig. f

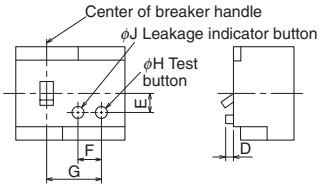

Fig. g

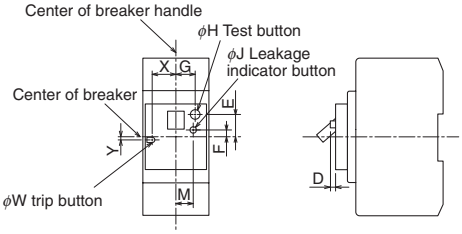

Fig. h

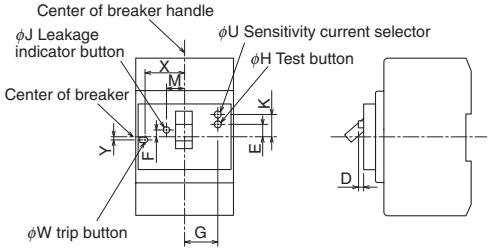

Fig. i

### Table of dimension variations

| Model | | Reference drawing | Variable dimensions (mm) | | | | | | | | | | | | | | | | | |
|---|---|---|---|---|---|---|---|---|---|---|---|---|---|---|---|---|---|---|---|---|
| | | | D | | E | F | G | H | J | K | L | M | N | T | U | V | W | X | Y |
| | | | Test button | Indicator button | | | | | | | | | | | | | | | |
| NV32-SV | Fixed type | a | 3 | 4 | 13 | 8 | 26.5 | 9.5 | 4 | – | – | – | 16 | – | – | – | 6 | 29 | 20 |
| NV63-CV, NV63-SV, NV63-HV | Selector type | | | | | | | | | 16 | – | 7 | | 23.5 | 3 | – | | | |
| NV125-CV, NV125-SV, NV125-HV | Fixed type | a | | | 13 | 8 | 26.5 | 9.5 | 4 | – | – | – | 16 | – | – | – | 6 | 37 | 20 |
| | Selector type | | | | | | | | | 16 | – | 7 | | 24 | 3 | – | | | |
| | Time-delay type | | | | | | | | | 16 | 17 | 7 | | 24 | 3 | 3 | | | |
| NV250-CV, NV250-SV, NV250-HV | Fixed type | a | | | 13 | 8 | 34 | 9.5 | 4 | – | – | – | 23.5 | – | – | – | 6 | 44 | 20 |
| | Selector type | | | | | | | | | 16 | – | 7 | | 31 | 3 | – | | | |
| | Time-delay type | | | | | | | | | 16 | 24 | 7 | | 31 | 3 | 3 | | | |
| NV400-CW (note2) | Fixed type | c | 3 | 3 | (2.3) | 14.6 | 43.5 | 9.5 | 5 | – | 43.5 | – | 43.5 | – | – | – | 6.5 | 51.5 | 30.5 |
| NV400-SW, NV-SKW | Selector type | | | | | | | | | 30.6 | | – | | | 5.5 | – | | | |
| NV630-CW, NV630-SW | Time-delay type | | | | | | | | | 30.6 | | 22.6 | | | 5.5 | 5.5 | | | |
| NV400-SEW, NV400-HEW | Fixed type | c | 3 | 3 | (2.3) | 14.6 | 43.5 | 9.5 | 5 | – | 43.5 | – | 43.5 | – | – | – | 6.5 | 51.5 | 30.5 |
| NV400-REW (note2) | Selector type | | | | | | | | | 30.6 | | – | | | 5.5 | – | | | |
| NV630-SEW, NV630-HEW | Time-delay type | | | | | | | | | 30.6 | | 22.6 | | | 5.5 | 5.5 | | | |
| NV800-SEW, NV800-HEW | Selector type | c | 3 | 3 | (2.3) | 14.6 | 54.1 | 9.5 | 5 | 30.6 | 54.1 | – | 54.1 | – | 5.5 | – | 6.5 | 78.5 | 30.5 |
| | Time-delay type | | | | | | | | | 30.6 | | 22.6 | | | 5.5 | 5.5 | | | |

Note *1 Dimensions shown in parentheses apply to minus direction.

# 4. List of Product Weights

## MCCB

(kg)

| Model | Item | Breaker body | | | | | | | | | | | Accessories (weight of only accessories) | | | | | | | |
|---|---|---|---|---|---|---|---|---|---|---|---|---|---|---|---|---|---|---|---|---|
| | | Front connection type | | | | Rear connection type | | | | Plug-in type (including plug-in frame) | | | Electric operated type | Boxed type | | | Operation handle | | | Mechanical interlock (MI) |
| | | 1P | 2P | 3P | 4P | 1P | 2P | 3P | 4P | 2P | 3P | 4P | | S | I | W | F type | V type | S type | |
| C•S•H•MB | NF32-SV | – | 0.45 | 0.65 | – | – | 0.55 | 0.8 | – | 0.8 | 1.2 | – | – | 1.5 | 5.0 | 10.2 | 0.4 | 0.45 | 0.6 | 0.17 |
| | NF63-CV (rated current 50A or less) | – | 0.45 | 0.65 | – | – | 0.55 | 0.8 | – | 0.8 | 1.2 | – | – | 1.5 | 5.0 | 10.2 | 0.4 | 0.45 | 0.6 | 0.17 |
| | NF63-CV (rated current 60A, 63A) | – | 0.5 | 0.7 | – | – | 0.6 | 0.85 | – | 0.85 | 1.25 | – | – | 1.5 | 5.0 | 10.2 | 0.4 | 0.45 | 0.6 | 0.17 |
| | NF63-SV, NF63-HV (rated current 50A or less) | – | 0.5 | 0.7 | 0.9 | – | 0.6 | 0.85 | 1.1 | 0.85 | 1.25 | 1.5 | – | 1.5 | 5.0 | 10.2 | 0.4 | 0.45 | 0.6 | 0.17 |
| | NF63-SV, NF63-HV (rated current 60A, 63A) | – | 0.55 | 0.75 | 1.0 | – | 0.65 | 0.9 | 1.2 | 0.9 | 1.3 | 1.6 | – | 1.5 | 5.0 | 10.2 | 0.4 | 0.45 | 0.6 | 0.17 |
| | NF125-CV | – | 0.6 | 1.0 | – | – | 1.0 | 1.5 | – | 1.2 | 1.9 | – | 1.3 | 1.8 | 5.1 | 10.2 | 0.4 | 0.45 | 0.6 | 0.17 |
| | NF125-SV | – | 0.7 | 0.95 | 1.3 | – | 1.1 | 1.5 | 2.0 | 1.3 | 1.9 | 2.4 | 1.3 | 1.8 | 5.1 | 10.2 | 0.4 | 0.45 | 0.6 | 0.17 |
| | NF125-HV | – | 0.6 | 1.0 | 1.2 | – | 1.0 | 1.5 | 1.9 | 1.2 | 1.9 | 2.3 | 1.3 | 1.8 | 5.1 | 10.5 | 0.4 | 0.45 | 0.6 | 0.17 |
| | NF125-SEV | – | – | 1.7 | 2.2 | – | – | 2.2 | 2.9 | – | 2.6 | 3.3 | 1.3 | 6.8 | 8.7 | 13.5 | 0.5 | 0.55 | 0.6 | 0.17 |
| | NF125-HEV | – | – | 1.7 | 2.2 | – | – | 2.2 | 2.9 | – | 2.6 | 3.3 | 1.3 | 6.8 | 8.7 | 13.5 | 0.5 | 0.55 | 0.6 | 0.17 |
| | NF250-CV | – | 1.3 | 1.5 | – | – | 1.7 | 2.2 | – | 3.1 | 3.4 | – | 1.3 | 6.8 | 8.7 | 13.5 | 0.5 | 0.55 | 0.6 | 0.17 |
| | NF250-SV | – | 1.4 | 1.6 | 2.0 | – | 1.8 | 2.3 | 3.0 | 3.2 | 3.5 | 4.5 | 1.3 | 6.8 | 8.7 | 13.5 | 0.5 | 0.55 | 0.6 | 0.17 |
| | NF250-HV | – | 1.4 | 1.6 | 2.0 | – | 1.8 | 2.3 | 3.0 | 3.2 | 3.5 | 4.5 | 1.3 | – | 8.7 | 13.5 | 0.5 | 0.55 | 0.6 | 0.17 |
| | NF250-SEV | – | – | 1.7 | 2.2 | – | – | 2.4 | 3.2 | – | 3.6 | 4.7 | 1.3 | 6.8 | 8.7 | 13.5 | 0.5 | 0.55 | 0.6 | 0.17 |
| | NF250-HEV | – | – | 1.7 | 2.2 | – | – | 2.4 | 3.2 | – | 3.6 | 4.7 | 1.3 | – | 8.7 | 13.5 | 0.5 | 0.55 | 0.6 | 0.17 |
| | NF125-SGV | – | 1.4 | 1.6 | 2.0 | – | 1.8 | 2.3 | 3.0 | 3.2 | 3.5 | 4.5 | 1.3 | 6.8 | 8.7 | 13.5 | 0.5 | 0.55 | 0.6 | 0.17 |
| | NF125-LGV | – | 1.4 | 1.6 | 2.0 | – | 1.8 | 2.3 | 3.0 | 3.2 | 3.5 | 4.5 | 1.3 | – | 8.7 | 13.5 | 0.5 | 0.55 | 0.6 | 0.17 |
| | NF125-HGV | – | 1.4 | 1.6 | 2.0 | – | 1.8 | 2.3 | 3.0 | 3.2 | 3.5 | 4.5 | 1.3 | – | 8.7 | 13.5 | 0.5 | 0.55 | 0.6 | 0.17 |
| | NF160-SGV | – | 1.4 | 1.6 | 2.0 | – | 1.8 | 2.3 | 3.0 | 3.2 | 3.5 | 4.5 | 1.3 | 6.8 | 8.7 | 13.5 | 0.5 | 0.55 | 0.6 | 0.17 |
| | NF160-LGV | – | 1.4 | 1.6 | 2.0 | – | 1.8 | 2.3 | 3.0 | 3.2 | 3.5 | 4.5 | 1.3 | – | 8.7 | 13.5 | 0.5 | 0.55 | 0.6 | 0.17 |
| | NF160-HGV | – | 1.4 | 1.6 | 2.0 | – | 1.8 | 2.3 | 3.0 | 3.2 | 3.5 | 4.5 | 1.3 | – | 8.7 | 13.5 | 0.5 | 0.55 | 0.6 | 0.17 |
| | NF250-SGV | – | 1.4 | 1.6 | 2.0 | – | 1.8 | 2.3 | 3.0 | 3.2 | 3.5 | 4.5 | 1.3 | 6.8 | 8.7 | 13.5 | 0.5 | 0.55 | 0.6 | 0.17 |
| | NF250-LGV | – | 1.4 | 1.6 | 2.0 | – | 1.8 | 2.3 | 3.0 | 3.2 | 3.5 | 4.5 | 1.3 | – | 8.7 | 13.5 | 0.5 | 0.55 | 0.6 | 0.17 |
| | NF250-HGV | – | 1.4 | 1.6 | 2.0 | – | 1.8 | 2.3 | 3.0 | 3.2 | 3.5 | 4.5 | 1.3 | – | 8.7 | 13.5 | 0.5 | 0.55 | 0.6 | 0.17 |
| | NF30-CS | – | 0.25 | 0.35 | – | – | 0.35 | 0.5 | – | – | – | – | – | 1.1 | – | – | – | – | – | – |
| | NF400-CW | – | 4.4 | 5.0 | – | – | 5.7 | 7.0 | – | 7.0 | 8.3 | – | 9.0 | – | 19 | 30 | 2.0 | – | 1.9 | 0.45 |
| | NF400-SW | – | 4.6 | 5.2 | 6.8 | – | 5.9 | 7.3 | 9.7 | 7.2 | 8.5 | 11.3 | | – | | | | | | |
| | NF400-SEW/HEW | – | – | 6.0 | 7.6 | – | – | 8.1 | 10.5 | – | 9.3 | 12.0 | | – | | | | | | |
| | NF400-REW | – | – | 6.0 | – | – | – | 8.5 | – | – | 9.3 | – | | – | – | – | | | | |
| | NF630-CW | – | 5.2 | 6.0 | – | – | 6.5 | 7.9 | – | 7.6 | 9.1 | – | | – | 33 | 30 | | | | |
| | NF630-SW | – | 5.4 | 6.2 | 8.0 | – | 6.7 | 8.1 | 10.6 | 7.8 | 9.3 | 12.0 | | – | | | | | | |
| | NF630-SEW/HEW | – | – | 6.5 | 8.3 | – | – | 8.4 | 10.9 | – | 9.6 | 12.3 | | – | | | | | | |
| | NF630-REW | – | – | 6.5 | – | – | – | 8.4 | – | – | 9.6 | – | | – | – | – | | | | |
| | NF800-CEW | – | – | 10.9 | – | – | – | 12.1 | – | – | 16.3 | – | | – | 48 | 70 | 2.4 | – | | |
| | NF800-SDW | – | 9 | – | – | – | 10 | – | – | – | – | – | | – | | | | | | |
| | NF800-SEW/HEW | – | – | 10.9 | 14.2 | – | – | 12.1 | 15.8 | – | 16.3 | 21.4 | | – | | | | | | |
| | NF800-REW | – | – | 10.9 | – | – | – | 12.1 | – | – | 16.3 | – | | – | – | – | | | | |
| | NF1000-SEW, NF1250-SEW | – | – | 23.5 | 30.7 | – | – | 23 | 30.8 | – | 26.6 | 35.5 | 10 | – | 48 | 70 | 3.4 | – | 2.0 | |
| | NF1600-SEW | – | – | 34.5 | 41.2 | – | – | 30 | 40.7 | – | – | – | 10 | – | – | – | 3.4 | – | | 0.55 |
| R•U | NF125-RGV | – | 1.5 | 1.8 | – | – | – | – | – | 2.35 | 2.7 | – | 1.3 | – | – | – | 0.5 | 0.55 | 0.6 | 0.17 |
| | NF250-RGV | – | 1.5 | 1.8 | – | – | – | – | – | 3.2 | 3.6 | – | 1.3 | – | – | – | 0.5 | 0.55 | 0.6 | 0.17 |
| | NF125-UV | – | 1.35 | 1.5 | 1.9 | – | – | – | – | 2.2 | 2.4 | – | 1.3 | – | – | – | 0.5 | 0.55 | 0.6 | 0.17 |
| | NF250-UV | – | 2.5 | 2.7 | 3.7 | – | – | – | – | 4.2 | 4.5 | – | 1.3 | – | – | – | 0.5 | 0.55 | 0.6 | 0.17 |
| | NF400-UEW | – | – | 16.2 | 25.4 | – | – | 18.6 | 30.7 | – | 19.8 | – | 9.0 | – | – | – | 2.2 | – | 1.9 | 0.45 |
| | NF800-UEW | – | – | 27.6 | 33.7 | – | – | 31.2 | 38.4 | – | – | – | | – | – | – | 2.7 | – | | |
| BH | BH | 0.15 | 0.31 | 0.47 | – | – | – | – | – | – | – | – | – | – | – | – | – | – | – | – |
| | BH-S | – | 0.44 | 0.65 | – | – | – | – | – | – | – | – | – | – | – | – | – | – | – | – |
| | BH-P | 0.13 | 0.26 | 0.38 | – | – | – | – | – | – | – | – | – | – | – | – | – | – | – | – |
| | BH-PS | – | 0.35 | 0.53 | – | – | – | – | – | – | – | – | – | – | – | – | – | – | – | – |
| | BH-D6, BH-D10 | 0.15 | 0.3 | 0.45 | 0.55 | – | – | – | – | – | – | – | – | – | – | – | – | – | – | – |
| | BH-DN | – | 0.12 | – | – | – | – | – | – | – | – | – | – | – | – | – | – | – | – | – |
| | KB-D | 0.09 | 0.18 | 0.27 | 0.36 | – | – | – | – | – | – | – | – | – | – | – | – | – | – | – |
| UL | NF50-SVFU | – | 0.3 | 0.45 | – | – | – | – | – | – | – | – | – | – | – | – | 0.3 | 0.35 | – | – |
| | NF100-CVFU | – | 0.6 | 0.85 | – | – | – | – | – | – | – | – | – | – | – | – | 0.4 | 0.45 | – | – |
| | NF125-SVU | – | 0.7 | 0.95 | – | – | – | – | – | – | – | – | – | – | – | – | 0.4 | 0.5 | – | 0.17 |
| | NF125-HVU | – | – | 1.0 | – | – | – | – | – | – | – | – | – | – | – | – | 0.4 | 0.5 | – | 0.17 |
| | NF250-SVU | – | – | 1.7 | – | – | – | – | – | – | – | – | – | – | – | – | 0.5 | 0.55 | – | 0.17 |
| | NF250-HVU | – | – | 1.7 | – | – | – | – | – | – | – | – | – | – | – | – | 0.5 | 0.55 | – | 0.17 |
| | NF225-CWU | – | – | 1.5 | – | – | – | – | – | – | – | – | – | – | – | – | 0.5 | – | 0.6 | 0.17 |
| | NF-SKW | – | – | 5.7 | – | – | – | – | – | – | – | – | – | – | – | – | 2.0 | – | 1.9 | 0.45 |
| | NF-SLW | – | – | 9.6 | – | – | – | – | – | – | – | – | – | – | – | – | 2.4 | – | 1.9 | 0.45 |

## ELCB

(kg)

| Model | Item | Breaker body | | | | | | | | | Accessories (weight of only accessories) | | | | | | | |
|---|---|---|---|---|---|---|---|---|---|---|---|---|---|---|---|---|---|---|
| | | Front connection type | | | Rear connection type | | | Plug-in type (including plug-in frame) | | | Electric operated type | Boxed type | | | Operation handle | | | Mechanical interlock (MI) |
| | | 2P | 3P | 4P | 2P | 3P | 4P | 2P | 3P | 4P | | S | I | W | F type | V type | S type | |
| C•S•H•U•UL | NV32-SV | – | 0.75 | – | – | 0.95 | – | – | 1.35 | – | – | 1.5 | 5.0 | 10.2 | 0.4 | 0.45 | 0.6 | 0.17 |
| | NV63-CV, NV63-SV (rated current 50A or less) | 0.7 | 0.75 | – | 0.8 | 0.95 | – | 1.1 | 1.35 | – | – | 1.5 | 5.0 | 10.2 | 0.4 | 0.45 | 0.6 | 0.17 |
| | NV63-CV, NV63-SV (rated current 60A, 63A) | 0.75 | 0.8 | – | 0.85 | 1.0 | – | 1.15 | 1.4 | – | – | 1.5 | 5.0 | 10.2 | 0.4 | 0.45 | 0.6 | 0.17 |
| | NV63-HV (rated current 50A or less) | – | 0.75 | – | – | 0.95 | – | – | 1.35 | – | – | 1.5 | 5.0 | 10.2 | 0.4 | 0.45 | 0.6 | 0.17 |
| | NV63-HV (rated current 60A, 63A) | – | 0.8 | – | – | 1.0 | – | – | 1.4 | – | – | 1.5 | 5.0 | 10.2 | 0.4 | 0.45 | 0.6 | 0.17 |
| | NV125-CV | – | 1.0 | – | – | 1.5 | – | – | 1.9 | – | 1.3 | 1.8 | 5.1 | 10.2 | 0.4 | 0.45 | 0.6 | 0.17 |
| | NV125-SV | – | 1.1 | 1.4 | – | 1.6 | 2.1 | – | 2.0 | 2.5 | 1.3 | 1.8 | 5.1 | 10.2 | 0.4 | 0.45 | 0.6 | 0.17 |
| | NV125-HV | – | 1.1 | 1.4 | – | 1.6 | 2.1 | – | 2.0 | 2.5 | 1.3 | 1.8 | 5.1 | 10.5 | 0.4 | 0.45 | 0.6 | 0.17 |
| | NV125-SEV | – | 1.9 | 2.5 | – | 2.4 | 3.2 | – | 2.8 | 3.6 | 1.3 | 6.8 | 8.7 | 13.5 | 0.5 | 0.55 | 0.6 | 0.17 |
| | NV125-HEV | – | 1.9 | 2.5 | – | 2.4 | 3.2 | – | 2.8 | 3.6 | 1.3 | 6.8 | 8.7 | 13.5 | 0.5 | 0.55 | 0.6 | 0.17 |
| | NV250-CV | – | 1.7 | – | – | 2.4 | – | – | 3.6 | – | 1.3 | 6.8 | 8.7 | 13.5 | 0.5 | 0.55 | 0.6 | 0.17 |
| | NV250-SV | – | 1.9 | 2.5 | – | 2.6 | 3.5 | – | 3.8 | 5.0 | 1.3 | 6.8 | 8.7 | 13.5 | 0.5 | 0.55 | 0.6 | 0.17 |
| | NV250-HV | – | 1.8 | – | – | 2.5 | – | – | 3.7 | – | 1.3 | – | 8.7 | 13.5 | 0.5 | 0.55 | 0.6 | 0.17 |
| | NV50-SVFU | 0.4 | 0.5 | – | – | – | – | – | – | – | – | – | – | – | 0.3 | 0.35 | – | – |
| | NV100-CVFU | – | 0.95 | – | – | – | – | – | – | – | – | – | – | – | 0.4 | 0.45 | – | – |
| | NV125-SVU | – | 1.1 | – | – | – | – | – | – | – | – | – | – | – | 0.4 | 0.5 | – | 0.17 |
| | NV125-HVU | – | 1.1 | – | – | – | – | – | – | – | – | – | – | – | 0.4 | 0.5 | – | 0.17 |
| | NV250-SVU | – | 1.9 | – | – | – | – | – | – | – | – | – | – | – | 0.5 | 0.55 | – | 0.17 |
| | NV250-HVU | – | 1.9 | – | – | – | – | – | – | – | – | – | – | – | 0.5 | 0.55 | – | 0.17 |
| | NV400-CW | – | 5.6 | – | – | 7.7 | – | – | 8.9 | – | 9.0 | – | 19 | 30 | 2.0 | – | 1.9 | 0.45 |
| | NV400-SW | – | 5.9 | – | – | 8 | – | – | 9.2 | – | | – | | | | – | | |
| | NV400-SEW/HEW | – | 6.6 | 8.2 | – | 8.7 | 11.4 | – | 9.9 | 12.5 | | – | | | | – | | |
| | NV400-REW | – | 6.6 | – | – | 8.7 | – | – | 9.9 | – | | – | – | – | 2.0 | – | | |
| | NV630-CW | – | 6.9 | – | – | 8.8 | – | – | 10.0 | – | | – | 33 | 30 | 2.4 | – | | |
| | NV630-SW | – | 6.9 | – | – | 8.8 | – | – | 10.0 | – | | – | | | | – | | |
| | NV630-SEW | – | 7.1 | 8.9 | – | 9.0 | 11.5 | – | 10.2 | 12.9 | | | | | | – | | |
| | NV630-HEW | – | 7.1 | – | – | 9.0 | – | – | 10.2 | – | | – | | | | – | | |
| | NV800-SEW/HEW | – | 15.3 | – | – | 16.5 | – | – | 20.7 | – | – | – | 48 | 70 | | – | | |
| | BV-D | 0.2 | – | 0.35 | – | – | – | – | – | – | – | – | – | – | – | – | – | – |
| | BV-DN | 0.19 | – | – | – | – | – | – | – | – | – | – | – | – | – | – | – | – |

# 5. Switching the Adjustable Items

## (1) Adjustable rated current and tripping characteristics items

| Applicable model | Adjustable item | Rated current | LTD tripping characteristics | STD tripping characteristics | Instantaneous tripping characteristics | PAL | Rated sensitivity | Rated Operating time (for time-delay type) | Rated voltage |
|---|---|---|---|---|---|---|---|---|---|
| MCCB | NF125-SEV/HEV | ○ | ○ (*2) | ○ (*2) | ○ | ○ (*1) | | | |
| | NF250-SEV/HEV | ○ | ○ (*2) | ○ (*2) | ○ | ○ (*1) | | | |
| | NF400-SEW/HEW/REW/UEW<br>NF630-SEW/HEW/REW<br>NF800-CEW/SEW/HEW/REW/UEW<br>NF1000-SEW, NF1250-SEW, NF1600-SEW | ○ | ○ | ○ | ○ | ○ | | | |
| | NF800-SDW, NF-SLW | | | | ○ | | | | |
| | NF125-SGV/LGV/HGV<br>NF160-SGV/LGV/HGV<br>NF250-SGV/LGV/HGV | ○ | | | | | | | |
| ELCB | NV125-SEV/HEV | ○ | ○ (*2) | ○ (*2) | ○ | ○ (*1) | ○ | ○ | |
| | NV250-SEV/HEV | ○ | ○ (*2) | ○ (*2) | ○ | ○ (*1) | ○ | ○ | |
| | NV400-SEW/HEW/REW<br>NV630-SEW/HEW<br>NV800-SEW/HEW | ○ | ○ | ○ | ○ | ○ | ○ | ○ | |
| | NV32-SV, NV63-CV/SV/HV | | | | | | ○ | | |
| | NV125-CV/SV/HV<br>NV250-CV/SV/HV<br>NV400-CW/SW, NV630-CW | | | | | | ○ | ○ | |

Notes *1 Available only for models with pre-alarm module.
*2 Use the OPERATION CHECK & SETUP UNIT Y-350. Consult Mitsubishi for details.

Remarks: Unless otherwise specified, the electronic breaker is adjusted to the following settings as a default.
(1) Rated current: maximum value
(2) LTD tripping characteristics:maximum value
(3) STD tripping characteristics (current, operating time):maximum value
(4) Instantaneous tripping characteristics:maximum value
(5) PAL:minimum value
(6) Rated sensitivity current:maximum value
(7) Leakage operation time (for time-delay type):maximum value

## (2) Adjusting the rated current and tripping characteristics

| Item | Electronic type | |
|---|---|---|
| Application | 125 to 250A frame | 400 to 1600A frame |
| Example of selector layout | 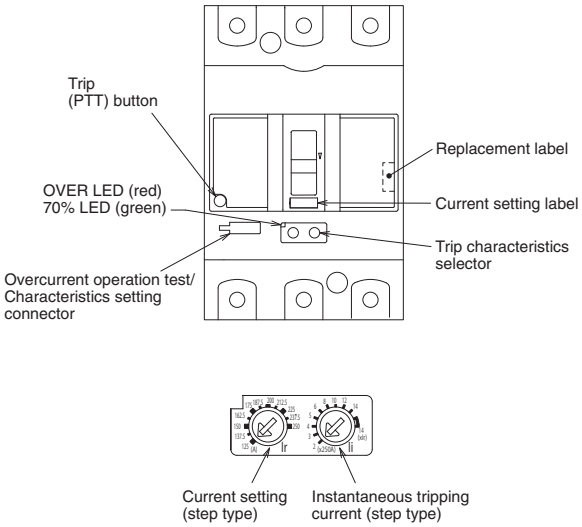 | 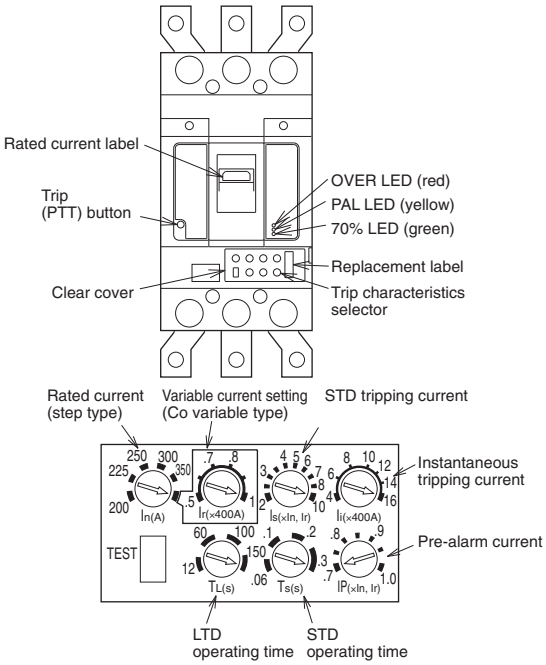 |
| Example of making a selection | Turn the handle to OFF before starting the settings.<br>① Set the arrow of each characteristic's setting dial to the required scale position. Always set the dial arrow within the bold lines of the setting value. If stopped at the middle, the adjacent setting value may be applied. Use a 0.5mm thick flat-tip screwdriver with a 3mm or less tip width. Turn the screwdriver at 0.05N·m or less.<br>② From the replacement labels, select the rated current label with the same value as the setting value.<br>③ Replace the rated current label.<br>④ Close the cover and tighten the screw. | Turn the handle to OFF before starting the settings.<br>① Open the clear cover.<br>② Set the arrow of each characteristic's setting dial to the required scale position. For values other than instantaneous tripping current and adjustable current settings, which can be adjusted at any time, always set the dial arrow within the bold lines of the setting value. If stopped at the middle, the adjacent setting value may be applied. Use a 0.6mm thick flat-tip screwdriver with a 4.5mm or less tip width. Turn the screwdriver at 0.05N·m or less.<br>③ From the replacement labels, select the rated current label with the same value as the setting value.<br>④ Replace the rated current label.<br>⑤ Close the clear cover. |
| Setter and tester | **In case of 125 to 250A frame**<br>**(Application: Electronic (effective value detection) breaker)**<br>**The following items can be set and tested using the breaker test and setter Y-350.**<br>● **LTD and STD characteristics settings**<br>● **Long-term operation test (variable signal)**<br>● **Short-term operation test (fixed signal) *1**<br>● **Instantaneous operation test (fixed signal)**<br>● **Pre-alarm operation test (variable signal) *2**<br>*1. Fixed signal which is 1.5 times the STD trip current.<br>*2. Only for models with pre-alarm module. | **In case of 400 to 1600A frame**<br>**(Application: Electronic (effective value detection) breaker)**<br>**The following items can be tested using the tester Y-250.**<br>● **Long-term operation test (variable signal)**<br>● **Short-term operation test (fixed signal)**<br>● **Instantaneous operation test (fixed signal)**<br>● **Pre-alarm operation test (variable signal)**<br> <br>**Y-250** |

## (3) Selecting the rated voltage, rated sensitivity and operating time

| Model | | Selector layout | Voltage selection | Sensitivity and operation time selection |
|---|---|---|---|---|
| ELCB | 3-step sensitivity selector type | 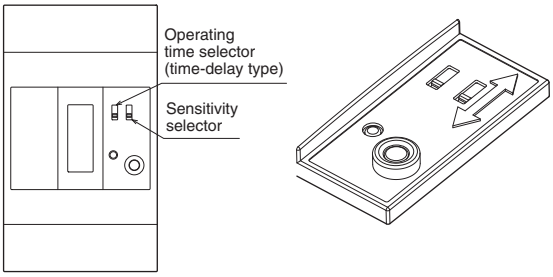 | Use for the circuit voltage within the rated voltage. | Turn the handle to OFF before changing the selection. |
| | | 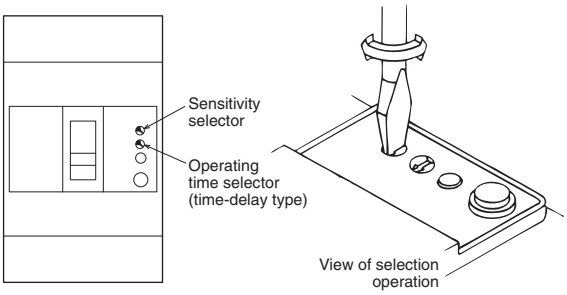 | Use for the circuit voltage within the rated voltage. | Turn the handle to OFF before changing the selection. |

# 6. Breaker Mounting Screw Dimensions

## ■ MCCB • MCB

| Class | Model | Hole depth A | Wood screw (round wood screw) for front connection | Front connection type | Rear connection type | Plug-in type | Required quantity per unit | | | |
|---|---|---|---|---|---|---|---|---|---|---|
| | | | | | | | 1P | 2P | 3P | 4P |
| C • S • H | NF50-SVFU | 56 | – | M4×0.7×65 (note) | – | – | – | 2 | 2 | – |
| | NF32-SV, NF63-CV, NF63-SV, NF63-HV<br>NF125-CV, NF125-SV, NF125-HV<br>NF100-CVFU, NF125-SVU<br>NF125-HVU | 45 | 4.1×58 | M4×0.7×55 | M4×0.7×55 | M4×0.7×55 | – | 2 | 2 | 4 |
| | NF125-SEV, NF125-HEV<br>NF250-CV, NF250-SV, NF250-HV<br>NF250-SEV, NF250-HEV<br>NF250-SVU, NF250-HVU<br>NF125-SGV, NF125-LGV, NF125-HGV<br>NF160-SGV, NF160-LGV, NF160-HGV<br>NF250-SGV, NF250-LGV, NF250-HGV | 45 | 4.1×58 | M4×0.7×55 | M4×0.7×55 | M4×0.7×55<br>M4×0.7×73 | – | 2<br>(For plug-in type 4) | 2 | 4 |
| | NF30-CS | 10 | 4.1×25 | M4×0.7×20 | M4×0.7×20 | – | – | 2 | 2 | – |
| | NF225-CWU | 45 | 4.1×58 | M4×0.7×55 | – | – | – | 2<br>(For plug-in type 4) | 2 | 4 |
| | NF400-CW, NF400-SW<br>NF-SKW | 47 | – | M6×60 | M6×72 | M6×72 | – | 4 | 4 | 4 |
| | NF400-SEW, NF400-HEW, NF400-REW<br>NF630-CW, NF630-SW, NF630-SEW<br>NF630-HEW, NF630-REW | 59 | – | M6×72 | M6×85 | M6×85 | – | 4 | 4 | 4 |
| | NF800-CEW, NF800-SEW<br>NF800-HEW, NF800-REW, NF-SLW | 15 | – | M6×35 | M6×40 | M6×35 | – | 4 | 4 | 4 |
| | NF1000-SEW, NF1250-SEW | 18.5 | – | M8×40 | M8×40 | M8×40 | – | 4 | 4 | 4 |
| | NF1600-SEW | 18.5 | – | M8×40 | M8×40 | – | – | 4 | 4 | 4 |
| R • U | NF125-RGV<br>NF250-RGV | 45 | – | M4×0.7×55 | M4×0.7×55 | M4×0.7×55 | – | 2 | 2 | – |
| | NF125-UV, NF250-UV | 45/61 | – | M4×0.7×55/73 | M4×0.7×55/73 | M4×0.7×55/73 | – | 4 | 4 | – |
| | NF125-UV (4P), NF250-UV (4P) | 45 | – | M4×0.7×55 | M4×0.7×55 | M4×0.7×55 | – | 2 | 2 | 4 |
| | NF400-UEW (3P) | 47/156 | – | M6×65/174 | M6×72/181 | M6×72/181 | – | – | 4 | – |
| | NF400-UEW (4P), NF800-UEW | 15/112 | – | M6×35/132 | M6×40/137 | M6×35/132 | – | – | 4 | 6 |
| BH | BH | – | – | – | – | – | – | – | – | – |
| | BH-S | – | – | – | – | – | – | – | – | – |
| | BH-P | – | – | – | – | – | – | – | – | – |
| | BH-PS | – | – | – | – | – | – | – | – | – |
| | BH-D6 | – | – | – | – | – | – | – | – | – |
| | BH-DN | – | – | – | – | – | – | – | – | – |
| | KB-D | – | – | – | – | – | – | – | – | – |
| | BH-D10 | – | – | – | – | – | – | – | – | – |

Remarks: 1. The mounting shown in the ▭ sections are enclosed with the MCCB. The mounting screws for the plug-in connection are enclosed with the plug-in terminal block. All other mounting screws must be prepared by the user.
2. All mounting screws other than the hexagon socket bolts and hexagon bolts are P-type panhead screws.
3. For models with two types of mounting screws, the screw length differs on the supply side and load side.
4. The plug-in type is not available for NF800-UEW.

Note For the P-type panhead screw, use a type with a spring washer and flat washer (small round) combination, or a P-type panhead screw with spring washer and flat washer.

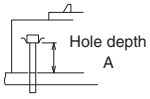


## ■ ELCB • RCCB • RCBO

| Class | Model | Hole depth A | Wood screw (round wood screw) for front connection | Screw for steel plates (P-type panhead screw) | | | Required quantity per unit | |
|---|---|---|---|---|---|---|---|---|
| | | | | Front connection type | Rear connection type | Plug-in type | 2, 3P | 4P |
| NV | NV50-SVFU | 56 | – | M4×0.7×65 (note) | – | – | 2 | – |
| | NV32-SV, NV63-CV, NV63-SV, NV63-HV<br>NV125-CV, NV125-SV, NV125-HV<br>NV100-CVFU, NV125-SVU, NV125-HVU | 45 | 4.1×58 | M4×0.7×55 | M4×0.7×55 | M4×0.7×55 | 2 | 4 |
| | NV125-SEV, NV125-HEV<br>NV250-CV, NV250-SV, NV250-HV<br>NV250-SEV, NV250-HEV, NV250-SVU, NV250-HVU | 45 | 4.1×58 | M4×0.7×55 | M4×0.7×55 | M4×0.7×55<br>M4×0.7×73 | 2<br>(For plug-in type 4) | 4 |
| | NV400-CW, NV400-SW | 47 | – | M6×60 | M6×72 | M6×72 | 4 | 4 |
| | NV400-SEW, NV400-HEW, NV400-REW<br>NV630-CW, NV630-SW, NV630-SEW<br>NV630-HEW | 59 | – | M6×72 | M6×85 | M6×85 | 4 | 4 |
| | NV800-SEW, NV800-HEW | 15 | – | M6×35 | M6×40 | M6×35 | 4 | 4 |
| BV | BV-D | – | – | – | – | – | – | – |
| | BV-DN | – | – | – | – | – | – | – |

Remarks: 1. The mounting shown in the ▭ sections are enclosed with the ELCB.

Note For the P-type panhead screw, use a type with a spring washer and flat washer (small round) combination, or a P-type panhead screw with spring washer and flat washer.

# 7. List of Mold Surface Temperature-rise Values

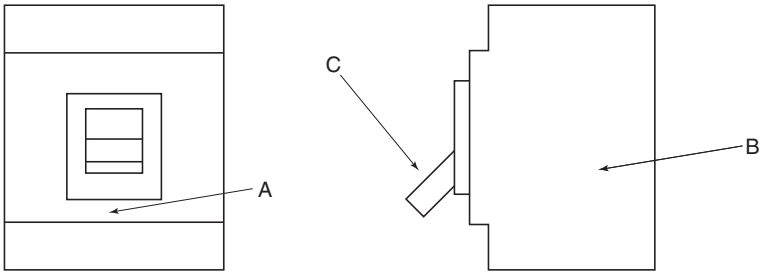


## MCCB

(K)

| Model | Conducting current | Measurement point | | | | |
|---|---|---|---|---|---|---|
| | | Cover surface (A) | Base side (B) | Handle (C) | Line terminal | Load terminal |
| NF32-SV | 32A | 14 | 38 | 12 | 36 | 37 |
| NF63-CV | 63A | 15 | 42 | 14 | 39 | 44 |
| NF63-SV | 63A | 15 | 39 | 12 | 41 | 44 |
| NF63-HV | 63A | 15 | 42 | 12 | 41 | 49 |
| NF125-CV | 125A | 13 | 29 | 9 | 43 | 42 |
| NF125-SV | 125A | 14 | 32 | 10 | 44 | 40 |
| NF125-HV | 125A | 16 | 33 | 11 | 49 | 42 |
| NF250-CV | 250A | 19 | 35 | 13 | 46 | 45 |
| NF250-SV | 250A | 20 | 36 | 13 | 47 | 45 |
| NF250-HV | 250A | 20 | 36 | 13 | 49 | 46 |
| NF30-CS | 30A | 18 | 15 | 5 | 23 | 33 |
| NF125-SGV | 125A | 20 | 35 | 13 | 42 | 49 |
| NF250-SGV | 250A | 20 | 36 | 13 | 49 | 50 |
| NF160-SGV | 160A | 20 | 35 | 13 | 40 | 44 |

(K)

| Model | Conducting current | Measurement point | | | | |
|---|---|---|---|---|---|---|
| | | Cover surface (A) | Base side (B) | Handle (C) | Line terminal | Load terminal |
| NF400-CW | 400A | 16 | 25 | 16 | 47 | 37 |
| NF400-SW | 400A | 20 | 27 | 10 | 46 | 37 |
| NF400-SEW | 400A | 14 | 22 | 9 | 35 | 31 |
| NF400-HEW | 400A | 14 | 23 | 8 | 34 | 32 |
| NF400-REW | 400A | 15 | 23 | 9 | 35 | 32 |
| NF400-UEW | 400A | 19 | 28 | 13 | 42 | 33 |
| NF630-CW | 630A | 23 | 32 | 15 | 52 | 52 |
| NF630-SW | 630A | 23 | 33 | 16 | 54 | 52 |
| NF630-SEW | 630A | 22 | 31 | 14 | 51 | 45 |
| NF630-HEW | 630A | 20 | 31 | 13 | 50 | 44 |
| NF630-REW | 630A | 21 | 31 | 13 | 51 | 44 |
| NF800-CEW | 800A | 21 | 30 | 13 | 45 | 40 |
| NF800-SDW | 800A | 18 | 28 | 12 | 46 | 44 |
| NF800-SEW | 800A | 21 | 30 | 12 | 45 | 41 |
| NF800-HEW | 800A | 22 | 31 | 12 | 47 | 42 |
| NF800-REW | 800A | 21 | 30 | 13 | 46 | 42 |
| NF800-UEW | 800A | 25 | 35 | 16 | 51 | 46 |

## ELCB

(K)

| Model | Conducting current | Measurement point | | | | |
|---|---|---|---|---|---|---|
| | | Cover surface (A) | Base side (B) | Handle (C) | Line terminal | Load terminal |
| NV32-SV | 32A | 15 | 35 | 11 | 36 | 41 |
| NV63-CV | 63A | 17 | 32 | 13 | 43 | 41 |
| NV63-SV | 63A | 17 | 37 | 13 | 45 | 47 |
| NV63-HV | 63A | 17 | 35 | 13 | 43 | 43 |
| NV125-CV | 125A | 13 | 30 | 13 | 47 | 43 |
| NV125-SV | 125A | 14 | 30 | 15 | 45 | 43 |
| NV125-HV | 125A | 14 | 32 | 14 | 42 | 43 |
| NV250-CV | 250A | 21 | 37 | 14 | 43 | 44 |
| NV250-SV | 250A | 21 | 39 | 18 | 47 | 43 |
| NV250-HV | 250A | 23 | 38 | 17 | 48 | 43 |

(K)

| Model | Conducting current | Measurement point | | | | |
|---|---|---|---|---|---|---|
| | | Cover surface (A) | Base side (B) | Handle (C) | Line terminal | Load terminal |
| NV400-CW | 400A | 22 | 32 | 11 | 46 | 41 |
| NV400-SW | 400A | 23 | 32 | 12 | 47 | 42 |
| NV400-SEW | 400A | 16 | 23 | 10 | 36 | 34 |
| NV400-HEW | 400A | 15 | 22 | 11 | 35 | 35 |
| NV400-REW | 400A | 15 | 22 | 10 | 36 | 35 |
| NV630-CW | 630A | 24 | 34 | 17 | 54 | 52 |
| NV630-SW | 630A | 23 | 33 | 16 | 53 | 53 |
| NV630-SEW | 630A | 23 | 34 | 17 | 54 | 53 |
| NV630-HEW | 630A | 22 | 33 | 17 | 54 | 52 |
| NV800-SEW | 800A | 29 | 40 | 13 | 53 | 46 |

Notes *1 The connected wire size follows JIS C 8201 Ann.2 Standards. The temperature rise value will vary according to the size of the connected wire.
*2 This table shows the temperature-rise values. The ambient temperature must be added for the actual measurement value.
*3 These are examples of the measurement values, and are not guaranteed values. Use these as reference data.

# 8. Ordering Information

## Molded Case Circuit Breakers

**Model**
**NF250-SV**

| | | |
|---|---|---|
| NF | C | Economy class |
| | S | Standard class |
| | H | High-performance class |
| | U | Ultra current-limiting class |
| DSN | | DSN-type switches |

**Number of poles**
**3P**

2P, 3P, 4P

**Rated current**
**200A**

Please specify the rated current even for rated current adjustable types

**Motor protection**
**MB**

Please specify MB for Motor Protection Breakers

**Rated voltage**

Please specify DC voltage for use in DC circuit

**Standard**

Please specify applicable marine standard

**Connection method**
**B**

| | |
|---|---|
| F | Front connection |
| SL | Solderless (box) terminal |
| B | Rear connection |
| PM | Plug-in |

**Built-in accessories**
**PAL**

| | |
|---|---|
| PAL | Pre-alarm (contact output) |

**Internal accessories**
**AL, SHT (110VAC)**

| | |
|---|---|
| AL | Alarm switch |
| AX | Auxiliary switch |
| SHT | Shunt trip (specify rated coil voltage) |
| UVT | Undervoltage trip (specify rated coil voltage) |
| SLT | Lead-wire terminal block |

**External accessories**

| | |
|---|---|
| MD | Electrical operation device |
| F/S/V | Operating handle |
| S/I/W | Enclosure box |
| MI | Mechanical interlock |
| TC | Terminal cover (TC-L, TC-S, TTC, BTC) |
| LC/HL HL-S | Handle lock device |
| CH | Card holder |

**Special-purpose breakers**

| | |
|---|---|
| Mag Only | Mag Only (specify AC or DC and rated current) |
| DC400V | DC use (specify 400, 440, 500, 550 or 600VDC) |
| 400Hz | 400Hz use |
| Low-inst | Low-inst (specify AC or DC and Inst. %) |

**Quantity**
**10**

## Earth Leakage Circuit Breakers

**Model**
**NV250-SV**

| | | |
|---|---|---|
| NV | C | Economy class |
| | S | Standard class |
| | H | High-performance class |
| | U | Ultra current-limiting class |

**Number of poles**
**3P**

| | | |
|---|---|---|
| 2P | NV | 1ø2W |
| 3P | NV | 1ø2W<br>1ø3W<br>3ø3W |
| 4P | NV | 3ø4W |

**Rated current**
**200A**

Please specify the rated current even for rated current adjustable types

**Motor protection**
**MB**

Please specify MB for Motor Protection Breakers

**Rated voltage**
**AC**

| |
|---|
| AC |
| 100-440V |
| 200-440V |

**Rated sensitivity current**
**100/200/500mA**

| |
|---|
| 30mA |
| 100/200/500mA |

**Connection method**
**B**

| | |
|---|---|
| F | Front connection |
| SL | Solderless (box) terminal |
| B | Rear connection |
| PM | Plug-in |

**Type of residual current protection**

| | |
|---|---|
| Blank | High-speed type |
| Specify | Time-delay type |

**Built-in accessories**
**MG**

| | |
|---|---|
| MG | Insulation switch |
| EAL | Earth-leakage circuit alarm switch |
| TBM | Test button module |
| PAL | Pre-alarm module |

**Internal accessories**
**AX, SLT, TBM**

| | |
|---|---|
| AL | Alarm switch |
| AX | Auxiliary switch |
| UVT | Undervoltage trip (specify rated coil voltage) |
| SLT | Lead-wire terminal block |

**External accessories**

| | |
|---|---|
| MD | Electrical operation device |
| F/S/V | Operating handle |
| MI | Mechanical interlock |
| TC | Terminal cover (TC-L, TC-S, TTC, BTC) |
| LC/HL HL-S | Handle lock device |
| CH | Card holder |

**Quantity**
**10**

## Circuit Protector (CP30-BA)

| Model | Number of poles | Internal circuit | Operating characteristics | Rated current or rated operational voltage | Connection method |
|---|---|---|---|---|---|
| CP30-BA | 1P | 1 | M | 3A | |

**Number of poles**

| |
|---|
| 1P |
| 2P |
| 3P (Note 1) |

**Internal circuit**

| | |
|---|---|
| 1 | Inline type |
| 2 | Inline type with auxiliary switch (general load) |
| 21* | Inline type with auxiliary switch (microload) (Note 2) |
| 6 | Relay type shunt tripping |
| 9 | Inline type with alarm switch (general load) |
| 91* | Inline type with auxiliary switch (microload) (Note 2) |

**Operating characteristics**

| | |
|---|---|
| I | Instantaneous type |
| M | Medium-speed type |
| MD | Medium-speed type with inertial delay (Note 1) |
| S | Low-speed type |
| SD | Low-speed type with inertial delay (Note 1) |
| F | High-speed type |

**Rated operational voltage** (for shunt tripping)

| | |
|---|---|
| 100-200V | 100-200VAC and 100VDC common |
| 24-48V | 24-48VDC common |

**Rated current or rated operational voltage**

| | | | |
|---|---|---|---|
| 0.1A | 0.25A | 0.3A | 0.5A |
| 1A | 2A | 3A | 5A |
| 7A | 10A | 15A | 20A |
| 30A | | | |

Shaded parts are standard inventory.

**Connection method**

| | |
|---|---|
| No symbol | Screw terminal |
| T | Metal tab terminal |

Notes *1 3-pole and inertial delay models are dedicated for AC.
*2 If an auxiliary switch (AX) or alarm switch (AL) used for a 125VAC 0.5A or less circuit is required, select the microload type indicated with an asterisk*.
*3 The relay type shunt trip is subject to CCC. This is a UL (cURus) and CE Marking compliant product.

Example 1. CP30-BA 1P 1-M 3A (example of inline type, medium-speed, 1-pole part, 3A, screw terminal specifications)

**As a standard, this product is a UL (cURus), CCC, CE Marking compliant product.**

Mandatory items are indicated with a bold box. Always specify these items.

Unless specified, all other items will be manufactured with standard Mitsubishi specifications.

## UL 489 Listed Molded Case Circuit Breakers

| Model | Number of poles | Rated current | Connection method | Internal accessories | Number of units | External accessories |
|---|---|---|---|---|---|---|
| NF250-SVU | 3P | 200A | F | AL, SHT(AC100-240V) | 10 units | |

**Number of poles**

| |
|---|
| 2P |
| 3P |

**Connection method**

| | |
|---|---|
| F | Crimp terminal |
| SL | Solderless terminal |
| BAR | Bar terminal |

**Internal accessories**

| | |
|---|---|
| AL | Alarm switch |
| AX | Auxiliary switch |
| SHT | Shunt tripping device (Designate rated voltage for coil) |
| UVT | Undervoltage tripping device (Designate rated voltage for coil) |
| SLT | Vertical lead-wire terminal block |

* When ordering two, designate as AL2 or AX2. For the microload type, designate AL-B or AX-B.

**External accessories**

| | |
|---|---|
| F•V•S•C | Operation handle |
| MI | Mechanical interlock |
| TC | Terminal cover (TC-L(*), TC-S) |
| HL•HL-S | Handle lock |

* For the 30 to 250A frame 2-pole or 3-pole TC-L, the specifications will be set according to the rated current.

## UL 489 Listed Earth Leakage Circuit Breakers

| Model | Number of poles | Rated current | Rated voltage | Rated sensitivity current | Connection method | Internal accessories | Number of units | External accessories |
|---|---|---|---|---|---|---|---|---|
| NV250-SVU | 3P | 200A | AC120-480V | 100 • 300 • 500mA | F | AX, SLT | 10 units | |

**Number of poles**

| |
|---|
| 2P |
| 3P |

**Rated voltage**

| |
|---|
| AC240V |
| AC120-240V |
| AC120-480V |

**Rated sensitivity current**

| |
|---|
| 30 |
| 50 |
| 100 |
| 100 • 200 • 500mA |
| 100 • 300 • 500mA |

**Connection method**

| | |
|---|---|
| F | Crimp terminal |
| SL | Solderless terminal |
| BAR | Bar terminal |

**Internal accessories**

| | |
|---|---|
| AL | Alarm switch |
| AX | Auxiliary switch |
| SHT | Shunt tripping device (Designate rated voltage for coil) |
| UVT | Undervoltage tripping device (Designate rated voltage for coil) |
| SLT | Vertical lead-wire terminal block |

* When ordering two, designate as AL2 or AX2. For the microload type, designate AL-B or AX-B.

**External accessories**

| | |
|---|---|
| F•V•S•C | Operation handle |
| MI | Mechanical interlock |
| TC | Terminal cover (TC-L (*), TC-S) |
| HL•HL-S | Handle lock |

* For the 30 to 250A frame 2-pole or 3-pole TC-L, the specifications will be set according to the rated current.

# 9. Melshort 2

## A Smarter, Easier Way to Select Breakers

This software program ensures the easy selection of low-voltage circuit breakers according to the required rated breaking capacity and related equipment.

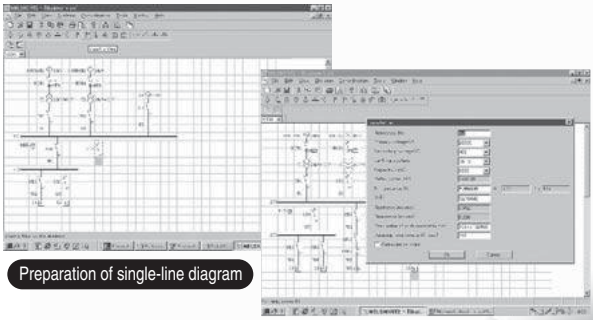

Preparation of single-line diagram

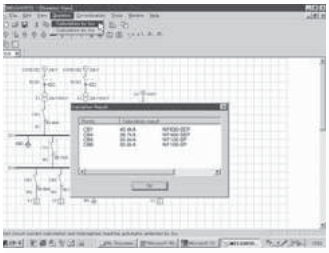

Short-circuit current calculation

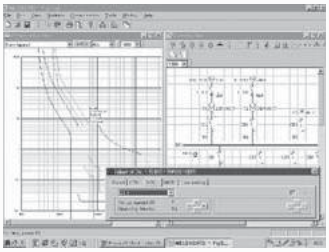

Coodination between high-voltage protection equipments

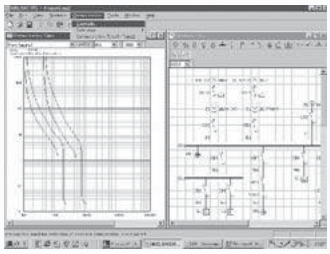

Examination of cascade interruption combination

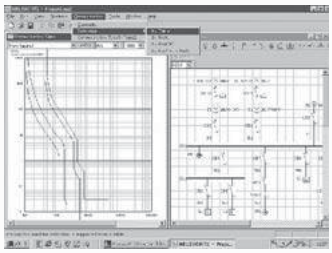

Examination of selective interraption

# Advantages

### ●Contents

The program's menu allows not only short-circuit current calculations, but also the examination of various protection coordination.

- ●Preparation of single-line connection diagrams.
- ●Short-circuit calculations.
- ●Automatic selection of breaker type.
- ●Selection of breaker type for cascade interruption combination.
- ●Selection of breaker type for selective interruption combination.
- ●Examination of coordination between high-voltage protection equipment.
- ●Protection coordination with motor start current.

### ■Products Menu

Low-voltage circuit breakers:
MCCBs, ELCBs, ACBs, MCBs, Contactors,
Thermal relays, High-voltage OCRs

### ●Selection Efficiency Improved

Simple, accurate and fast operation is ensured as a result of being able to examine the coordination between various protection systems, and being able to select breakers interactively on the screen.

### ●Software Updates

Users can download the latest software updates by accessing Mitsubishi's LVS home page.

**http://www.fukuyama.melco.co.jp/lvs**

### ■Computer Requirements

Operating system: Windows 95/98/NT4.0/2000/XP
CPU: 166 MHz or faster
RAM memory size: min 32 MB
Free hard disk capacity: min 50 MB
Display resolution: min 640 x 480 dots
CD-ROM Drive: 2x or higher

# 10. Low Voltage Products Website

*Changes for the Better*

MITSUBISHI ELECTRIC

## www.MitsubishiElectric.co.jp/haisei/lvs/

— Easier to Navigate, More Information Available —

Whether you are looking for information on high-performance power distribution/protection systems and energy-saving support equipment or simply interested in one of our many low-voltage power control products, we've made things easier for you to find. The website is now organized to provide enhanced usability for customers, and the latest information on our low-voltage products and systems.
Please be sure to visit, check out our new look, and bookmark the site for future reference.

## Four Key Features

1. **Product Information**
   Based on past customer requests, we've increased the content to include a full product line-up, product specifications and relevant CAD data. The Products pages are divided into two categories:
   **Low-voltage Circuit Breakers**
   WS-V Series Next-generation MCCB and ELCB, AE-SW Series ACB, DIN Series MCB
   **Energy Measuring Devices**
   New S Series Multi-measuring Instruments, EcoMonitorPro Energy Measuring Unit
2. **Downloads**
   The latest catalogs, information on certifications acquired, handling and maintenance information, and technical notes can all be downloaded free of charge. We've organized the information for maximum customer convenience, and will be updating the contents penodically.
3. **News**
   Check here for the latest, up-to-date news on Mitsubishi Electric products such as new product releases and changes in specifications.
4. **Support**
   Our interest is to serve you! Please contact us whenever you have a question or are in need of support. We'll reply at the earliest possible time. Committed to supporting our customers' businesses, we also provide information through Mitsubishi Electric's global network.

Empowering Industries

# Product Line-up

Mitsubishi Electric manufactures intelligent high-performance low-voltage products that are renowned for their high reliability. Each product page provides product details and other information required to help you make the right decision, as well as links to other pages of related interest, such as downloadable catalogs and product certifications.

## Low-voltage Products

### Circuit Breakers

- Air Circuit Breakers (ACB)
- Molded Case Circuit Breakers (MCCB)
- Earth Leakage Circuit Breakers (ELCB)
- Miniature Circuit Breakers (MCB)
- Measuring Display Unit Breakers
- UL 489 Listed Circuit Breakers
- Circuit Protectors
- Motor Protection Breakers

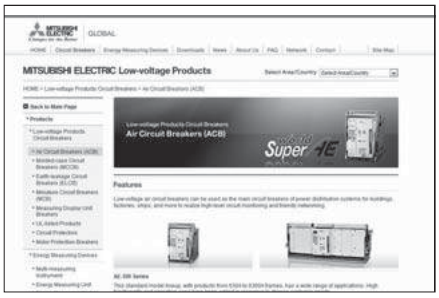

### Energy Measuring Devices

- Multi-measuring Instrument
- Energy Measuring Unit

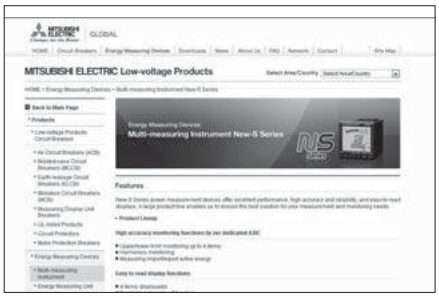


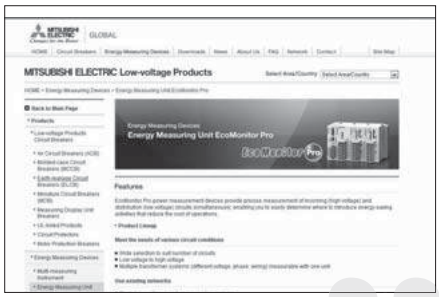


# Downloads

Download useful product information in PDF format whenever you need it.

- Catalogs
- Approved certifications
- Handling and maintenance
- Technical notes

# About Us

The outstanding technological expertise of the Fukuyama Works has led to its recognition as a leader in the field of power distribution control equipment. These pages provide various information on the works, including our history and manufacturing facilities.

# Related Websites

Mitsubishi Electric offers a variety of FA products and systems.
For further information, please visit the Mitsubishi Electric Global Website at:

**Global.MitsubishiElectric.com**

# MITSUBISHI Molded Case Circuit Breakers & Earth Leakage Circuit Breakers

## Sales Network

| Country / Region | Corporation Name | Address | Telephone |
|---|---|---|---|
| Australia | Mitsubishi Electric Australia Pty. Ltd. | 348 Victoria Road, Rydalmere, N.S.W. 2116, Australia | +61-2-9684-7777 |
| Belarus | Tehnikon | Oktyabrskaya 19, Off. 705, BY-220030 Minsk, Belarus | +375(0)17/210 46 26 |
| Belgium | Koning & Hartman B.V. | Woluwelaan 31, BE-1800 Vilvoorde, Belgium | +32(0)2/2570240 |
| Chile | Rhona S.A. | Vte. Agua Santa 4211 Casilla 30-D (P.O. Box) Vina del Mar, Chile | +56-32-2-320-600 |
| China | Mitsubishi Electric Automation (China) Ltd. | Mitsubishi Electric Automation Building, No.1386 Hongqiao Road, Shanghai, 200336 | +86-21-2322-3030 |
| | Mitsubishi Electric Automation (China) Ltd. BeiJing Branch | 9/F, Office Tower1 Henderson Centre 18 Jianguomennei Dajie DongCheng district BeiJing 100005 | +86-10-6518-8830 |
| | Mitsubishi Electric Automation (China) Ltd. ShenZhen Branch | Room 2512--2516, Great China International Exchange Square, Jintian Rd.S., Futian District, Shenzhen, 518034 | +86-755-2399-8272 |
| | Mitsubishi Electric Automation (China) Ltd. GuangZhou Branch | Room 1609, North Tower, The Hub Center, No.1068, Xing Gang East Road, Haizhu District, Guang Zhou, China 510335 | +86-20-8923-6730 |
| | Mitsubishi Electric Automation (China) Ltd. ChengDu Branch | Block B, Room 407-408, Shangri-La Center Offeice Builiding, No.9 BinJiang East Road, Chengdu, China 610021 | +86-28-8446-8030 |
| | Mitsubishi Electric Automation (Hongkong) Ltd. | 10/F., Manulife Tower, 169 Electric Road, North Point, Hong Kong | +852-2887-8810 |
| Colombia | Proelectrico Representaciones S.A. | Carrera 42 # 75-367 Bod 109 Itagui Colombia | +57-4-4441284 |
| Czech Republic | AUTOCONT CONTROL SYSTEMS S.R.O | Technologická 374/6, CZ-708 00 Ostrava - Pustkovec | +420 595 691 150 |
| Denmark | BEIJER ELECTRONICS A/S | LYKKEGARDSVEJ 17, DK-4000 ROSKILDE | +45(0)46/75 76 66 |
| Egypt | Cairo Electrical Group | 9, Rostoum St. Garden City P.O. Box 165-11516 Maglis El-Shaab, Cairo - Egypt | +20-2-27961337 |
| France | Mitsubishi Electric Europe B.V. | 25, Boulevard des Bouvets, F-92741 Nanterre Cedex | +33(0)1/55 68 55 68 |
| Germany | Mitsubishi Electric Europe B.V. | Gothaer Str. 8, 40880 Ratingen , Germany | +49(0) 2102 486-0 |
| Greece | KALAMARAKIS - SAPOUNAS S.A. | IONIAS & NEROMILOU STR., CHAMOMILOS ACHARNES, ATHENS, 13678 Greece | +30-2102 406000 |
| | UTECO | 5, MAVROGENOUS STR., 18542 PIRAEUS, Greece | +30-211-1206-900 |
| Hungary | Meltrade Ltd. | Fertö utca 14. HU-1107 Budapest, Hungary | +36(0)1-431-9726 |
| India | Mitsubishi Electric India Private Limited | 2nd Floor, Tower A&B, Cyber Greens, DLF Cyber City, DLF Phase-III, Gurgaon - 122 022 Haryana, India | +91-124-4630300 |
| | Mitlite Electric Co. Pvt. Ltd. | Plot No.32 G/F, Sector-6 IMT, Manesar, Haryana -122050, India | +91-124-469-5300 |
| Indonesia | P. T. Sahabat Indonesia | P.O.Box 5045 Kawasan Industri Pergudangan, Jakarta, Indonesia | +62-(0)21-6610651-9 |
| Ireland | Mitsubishi Electric Europe B.V. | Westgate Business Park, Ballymount, IRL-Dublin 24, Ireland | +353(0)1-4198800 |
| Israel | Gino Industries Ltd. | 26, Ophir Street IL-32235 Haifa, Israel | +972(0)4-867-0656 |
| Italy | Mitsubishi Electric Europe B.V. | Viale Colleoni 7, I-20041 Agrate Brianza (MI), Italy | +39 039-60531 |
| Kazakhstan | Kazpromavtomatika | ul. Zhambyla 28, KAZ - 100017 Karaganda | +7-7212-501000 |
| Korea | Mitsubishi Electric Automation Korea Co., Ltd | 1480-6, Gayang-Dong, Gangseo-Gu, Seoul, Korea | +82-2-3660-9572 |
| Lebanon | Comptoir d'Electricite Generale-Liban | Cebaco Center - Block A Autostrade Dora, P.O. Box 11-2597 Beirut - Lebanon | +961-1-240445 |
| Lithuania | Rifas UAB | Tinklu 29A, LT-5300 Panevezys, Lithuania | +370(0)45-582-728 |
| Malaysia | Mittric Sdn Bhd | No. 5 Jalan Pemberita U1/49, Temasya Industrial Park, Glenmarie 40150 Shah Alam, Selangor, Malaysia | +603-5569-3748 |
| Malta | ALFATRADE LTD | 99 PAOLA HILL, PAOLA PLA 1702, Malta | +356(0)21-697-816 |
| Maroco | SCHIELE MAROC | KM 7,2 NOUVELLE ROUTE DE RABAT AIN SEBAA, 20600 Casablanca, Maroco | +212 661 45 15 96 |
| Myanmar | Peace Myanmar Electric Co.,Ltd. | NO137/139 Botahtaung Pagoda Road, Botahtaung Town Ship 11161, Yangon, Myanmar | +95-(0)1-202589 |
| Nepal | Watt&Volt House | KHA 2-65, Volt House Dillibazar Post Box: 2108, Kathmandu, Nepal | +977-1-4411330 |
| Netherlands | Imtech Marine & Offshore B.V. | Sluisjesdijk 155, NL-3087 AG Rotterdam, Netherlands | +31(0)10-487-19 11 |
| North America | Mitsubishi Electric Automation, Inc. | 500 Corporate Woods Parkway, Vernon Hills, IL 60061 USA | +847-478-2100 |
| Norway | Scanelec AS | Leirvikasen 43B, NO-5179 Godvik, Norway | +47(0)55-506000 |
| Middle East Arab Countries & Cyprus | Comptoir d'Electricite Generale-International-S.A.L. | Cebaco Center - Block A Autostrade Dora P.O. Box 11-1314 Beirut - Lebanon | +961-1-240430 |
| Pakistan | Prince Electric Co. | 2-P, GULBERG II, LAHORE - 54660 PAKISTAN | +92-(0)42-35752323<br>+92-(0)42-35753373 |
| Philippines | Edison Electric Integrated, Inc. | 24th Fl. Galleria Corporate Center, Edsa Cr. Ortigas Ave., Quezon City Metro Manila, Philippines | +63-(0)2-634-8691 |
| Poland | Mitsubishi Electric Europe B.V. Polish Branch | Krakowska 50, 32-083 Balice, Poland | +48(0)12 630 47 00 |
| Republic of Moldova | Intehsis SRL | bld. Traian 23/1, MD-2060 Kishinev, Moldova | +373(0)22-66-4242 |
| Romania | Sirius Trading & Services SRL | RO-060841 Bucuresti, Sector 6 Aleea Lacul Morii Nr. 3 | +40-(0)21-430-40-06 |
| Russia | Mitsubishi Electric Europe B.V. Moscow Branch | 52, bld. 3 Kosmodamianskaya Nab. 115054, Moscow, Russia | +7 495 721-2070 |
| Saudi Arabia | Center of Electrical Goods | Al-Shuwayer St. Side way of Salahuddin Al-Ayoubi St. P.O. Box 15955 Riyadh 11454 - Saudi Arabia | +966-1-4770149 |
| Singapore | Mitsubishi Electric Asia Pte. Ltd. | 307 Alexandra Road, Mitsubishi Electric Building, Singapore 159943 | +65-6473-2308 |
| Slovakia | PROCONT, Presov | Kupelna 1/, SK - 08001 Presov, Slovakia | +421(0)51-7580 611 |
| | SIMAP | Jana Derku 1671, SK - 91101 Trencin, Slovakia | + 421(0)32 743 04 72 |
| Slovenia | Inea RBT d.o.o. | Stegne 11, SI-1000 Ljubljana, Slovenia | +386(0)1-513-8116 |
| South Africa | CBI-electric: low voltage | Private Bag 2016, ZA-1600 Isando Gauteng, South Africa | +27-(0)11-9282000 |
| Spain | Mitsubishi Electric Europe B.V. Spanish Branch | Carretera de Rubí 76-80, E-08190 Sant Cugat del Vallés (Barcelona), Spain | +34(0)93-565-3131 |
| Sweden | Euro Energy Components AB | Järnvägsgatan 36, S-434 24 Kungsbacka, Sweden | +46(0)300-690040 |
| Switzerland | TriElec AG | Muehlentalstrasse 136, CH-8201 Schaffhausen | +41-(0)52-6258425 |
| Taiwan | Setsuyo Enterprise Co., Ltd | 5th Fl., No.105, Wu Kung 3rd, Wu-Ku Hsiang, Taipei, Taiwan, R.O.C. | +886-(0)2-2298-8889 |
| Thailand | United Trading & Import Co., Ltd. | 77/12 Bamrungmuang Road,Klong Mahanak Pomprab Bangkok Thailand | +66-223-4220-3 |
| Tunisia | MOTRA Electric | 3, Résidence Imen, Avenue des Martyrs Mourouj III, 2074 - El Mourouj III Ben Arous, Tunisia | +216-71 474 599 |
| Turkey | GTS | Bayraktar Bulvarı Nutuk Sok. No:5, Posta Kutusu34384, TR-34775 Yukan Dudullu-Uemraniye, Istanbul, Turkey | +90(0)216 526 3990 |
| United Kingdom | Mitsubishi Electric Europe B.V. | Travellers Lane, UK-Hatfield, Herts. AL10 8XB, United Kingdom | +44(0)1707-276100 |
| Uruguay | Fierro Vignoli S.A. | Avda. Uruguay 1274 Montevideo Uruguay | +598-2-902-0808 |
| Venezuela | Adesco S.A. | Calle 7 La Urbina Edificio Los Robles Locales C y D Planta Baja, Caracas - Venezuela | +58-212-241-9952 |
| Vietnam | CTY TNHH-TM SA GIANG | 10th Floor, Room1006-1007,225 Tran Hung Dao St.,Co Giang Ward, Dist. 1, Ho Chi Minh City, Vietnam | +84-8-838-6727/28/29 |

**For Safety :** Please read the instruction manual carefully before using the products in this catalog. Wiring and connection must be done by the person have a specialized knowledge of electric construction and wiring.

eco Changes

**for a greener tomorrow**

Eco Changes is the Mitsubishi Electric Group's environmental statement, and expresses the Group's stance on environmental management. Through a wide range of businesses, we are helping contribute to the realization of a sustainable society.

**MITSUBISHI ELECTRIC CORPORATION**

HEAD OFFICE: TOKYO BUILDING, 2-7-3, MARUNOUCHI, CHIYODA-KU, TOKYO 100-8310, JAPAN



Revised publication, effective Mar. 2012.
Specifications are subject to change without notice.
This pamphlet is made from **recycled paper**.

Y-0720 1203 printed in Japan (MDOC)